Preface

Thank you for using FV100 series Variable Frequency Drive made by Kinco Automation.

FV100 satisfies the high performance requirements by using a unique control method to achieve high torque, high accuracy and wide speed-adjusting range. Its anti-tripping function and capabilities of adapting to severe power network, temperature, humidity and dusty environment exceed those of similar product made by other companies, which improves the product's reliability noticeably;

FV100 use modularization design, in the premise of satisfying the demand of customer, we also can satisfy customer's personalized and industrization demand by expansion design, and this fit the trend of VFD development. Built-in PG connector, strong speed control, flexible input/output terminal, pulse frequency setting, saving parameters at power outage and stop, frequency setting channel, master and slave frequency control and so on, all these satisfy various of high accuracy and complex drive command, at the same time we provide the OEM customer high integration total solution, it values highly in system cost saving and system reliability improving.

FV100 can satisfy the customers' requirements on low noise and EMI by using optimized PWM technology and EMC design.

This manual provides information on installation, wiring, parameters setting, trouble-shooting, and daily maintenance. To ensure the correct installation and operation of FV100, please read this manual carefully before starting the drive and keep it in a proper place and to the right person.

Unpacking Inspection Note

Upon unpacking, please check for:

- Any damage occurred during transportation;
- Check whether the rated values on the nameplate of the drive are in accordance with your order.

Our product is manufactured and packed at factory with great care. If there is any error, please contact us or distributors.

The user manual is subject to change without notifying the customers due to the continuous process of product improvements

VFD model rule

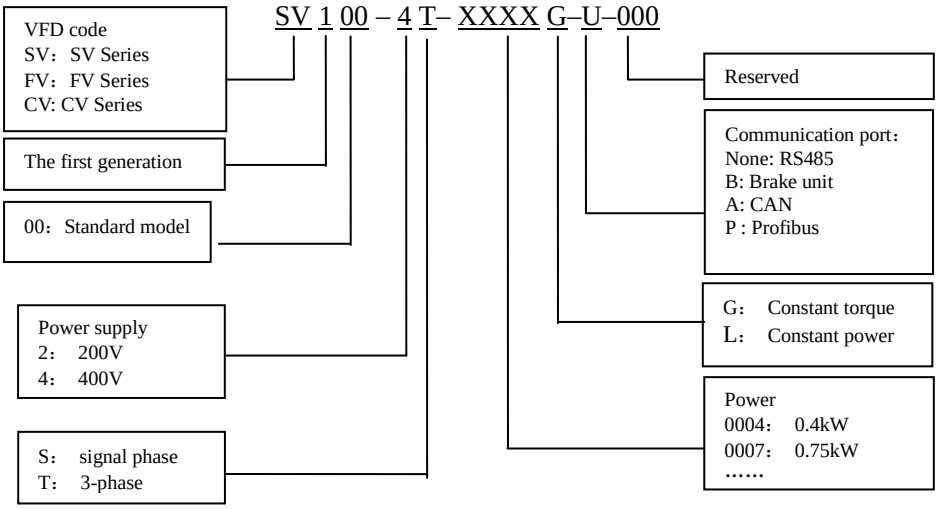

Content

Chapter 1 Safety 1
1.1 Safety 1
1.2 Notes for Installations 1
1.3 Notes for Using FV100 1
1.3.1 About Motor and Load 1
1.3.2 About Variable Frequency Drive 2
1.4 Disposing Unwanted Driver 3
Chapter 2 Product introduction 4
2.1 General specifications 4
2.2 Introduction of product series 5
2.3 Structure of VFD 7
2.4 External dimension and weight 8
2.4.1 External dimension and weight 8
2.4.2 Operation panel and installation box 11
2.4.3 Braking Resistor Selection 12
Chapter 3 Installation Environment 14
Chapter 4 Wiring Guide of VFD 15
4.1 Wiring and Configuration of Main circuit terminal 15
4.1.1 Terminal Type of Main Loop’s Input and Output 15
4.1.2 Wiring of VFD for Basic Operation 17
4.2 Wiring and configuration of control circuit 17
4.2.1 Wiring of control circuit terminal. 17
Chapter 5 Operation Instructions of Kinco VFD 25
5.1 Using Operation Panel 25
5.1.1 Operation panel appearance and keys’ function description 25
5.1.2 Function Descriptions of LED and Indicators 26
5.1.3 Display status of operation panel 26
5.1.4 Panel Operation 27
5.2 Operation mode of VFD 29
5.2.1 Control mode of VFD 29
5.2.2 Operating Status 29
5.2.3 Control mode and operation mode of Kinco VFD 29
5.2.4 The channels to set the VFD frequency 30
5.3 Power on the Drive for the first time 31
5.3.1 Checking before power on 31
5.3.2 Operations when start up the first time 31
Chapter 6 Parameter Introductions 32
6.1 Group A0 32

6.2 Group A1 34
6.3 Group A2 37
6.4 Group A3 39
6.5 Group A4 41
6.6 Group A5 42
6.7 Group A6 44
6.8 Group A7 54
6.9 Group A8 55
6.10 Group b0 56
6.11 Group b1 58
6.12 Group b2 60
6.13 Group b3 62
6.14 Group b4 62
6.15 Group C0 63
6.16 Group C1 63
6.17 Group C2 67
6.18 Group C3 70
6.19 Group d0 71
6.20 Group d1 74
6.21 Group d2 74
Chapter 7 Troubleshooting 75
Chapter 8 Maintenance 81
8.1 Daily Maintenance 81
8.2 Periodical Maintenance 81
8.3 Replacing Wearing Parts 82
8.4 Storage 83
Chapter 9 List of Parameters 84
Communication Protocol 122
1. Networking Mode 122
2. Interfaces 122
3. Communication Modes 122
4. Protocol Format 123
1. RTU mode 123
2. ASCII mode 123
5. Protocol Function 124
6.Control parameters and status parameters of VFD 125

Chapter 1 Safety

1.1 Safety

⚠ Danger	Operations without following instructions can cause personal injury or death.
⚠ Attention	Operations without following instructions can cause moderate injury or damage the products or other equipment

1.2 Notes for Installations

⚠ Danger

· Please install the drive on fire-retardant material like metal, or it may cause fire.

· Keep the drive away from combustible material and explosive gas, or it may cause fire.

· Only qualified personnel shall wire the drive, or it may cause electric shock.

· Never wire the drive unless the input AC supply is totally disconnected, or it may cause electric shock.

· The drive must be properly earthed to reduce electrical accident

· Install the cover before switching on the drive, to reduce the danger of electric shock and explosion.

· For drives that have been stored for longer than 2 years, increase its input voltage gradually before supplying full rated input voltage to it, in order to avoid electric shock and explosion

· Don't touch the live control terminals with bare hands

· Don’t operate the drive with wet hands

· Perform the maintenance job after confirming that the charging LED is off or the DC Bus voltage is below 36V, or it may cause electric shock.,

· Only trained professionals can change the components, it is prohibited to leave wires or metal parts inside the drive so as to avoid the risk of fire.

· Parameter settings of the control panel that has been changed must be revised, otherwise accidents may occur.

· The bare portions of the power cables must be bound with insulation tape

⚠ Attention

· Don’t carry the drive by its cover. The cover can not support the weight of the drive and may drop.

· Please install the drive on a strong support, or the drive may fall off.

· Don’t install the drive in places where water pipes may leak onto it.

· Don't allow screws, washers and other metal foreign matters to fall inside the drive, otherwise there is a danger of fire or damage;

· Don't operate the drive if parts are damaged or not complete, otherwise there is a danger of a fire or human injury;

· Don't install the drive under direct sunshine, otherwise it may be damaged;

· Don’t short circuit +//B1 and terminal (-), otherwise there is a danger of fire or the drive may be damaged.

· Cable lugs must be connected to main terminals firmly

· Don’t apply supply voltage (AC 220V or higher) to control terminals except terminals R1a, R1b and R1c.

·B1 and B2 are used to connect the brake resistor, do not shortcut them, or the brake unit may be damaged

1.3 Notes for Using FV100

Pay attention to the following issues when using FV100.

1.3.1 About Motor and Load

Compared to the power frequency operation

FV100 series drives are voltage type variable frequency drive. The output voltage is in PWM wave with some

harmonics. Therefore, temperature rise, noise and vibration of motor are higher compared to the power frequency.

Low Speed operation with Constant Torque

Driving a common motor at low speed for a long time, the drive's rated output torque will be reduced considering the deterioration of heat dissipation effect, so a special variable frequency motor is needed if operation at low speed with constant torque for a long term.

Motor's over-temperature protecting threshold

When the motor and driver are matched, the drive can protect the motor from over-temperature. If the rated capacity of the driven motor is not in compliance with the drive, be sure to adjust the protective threshold or take other protective measures so that the motor is properly protected.

Operation above 50Hz

When running the motor above 50Hz, there will be increase in vibration and noise. The rate at which the torque is available from the motor is inversely proportional to its increase in running speed. Ensure that the motor can still provide sufficient torque to the load.

Lubrication of mechanical devices

Over time, the lubricants in mechanical devices, such as gear box, geared motor, etc. when running at low speed, will deteriorate. Frequent maintenance is recommended.

Braking Torque

Braking torque is developed in the machine when the drive is hoisting a load down. The drive will trip when it can not cope with dissipating the regenerative energy of the load. Therefore, a braking unit with proper parameters setting in the drive is required.

The mechanical resonance point of load

The drive system may encounter mechanical resonance with the load when operating within certain band of output frequency. Skip frequencies have been set to avoid it.

Start and stop frequently

The drive should be started and stopped via its control terminals. It is prohibited to start and stop the drive directly through input line contactors, which may damage the drive with frequent operations.

Insulation of Motors

Before using the drive, the insulation of the motors must be checked, especially, if it is used for the first time or if it has been stored for a long time. This is to reduce the risk of the Drive from being damaged by the poor insulation of the motor. Wiring diagram is shown in Fig. 1-1. Please use 500V insulation tester to measure the insulating resistance. It should not be less than 5MΩ.

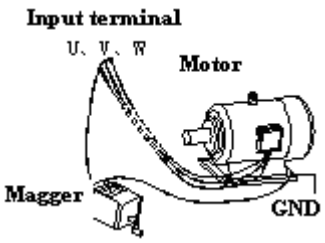

Fig. 1-1 checking the insulation of motor

1.3.2 About Variable Frequency Drive

Varistors or Capacitors Used to Improve the Power Factor

Considering the drive output PWM pulse wave, please don't connect any varistor or capacitor to the output terminals of the drive, otherwise tripping or damaging of components may occur; as shown in fig 1.2

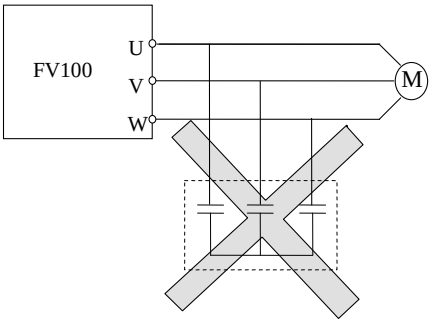

Fig. 1-2 Capacitors are prohibited to be used.

Circuit breakers connected to the output of VFD

If circuit breaker or contactor needs to be connected between the drive and the motor, be sure to operate these circuit breakers or contactor when the drive has no output, to avoid damaging of the drive.

Using VFD beyond the range of rated voltage

The drive is not suitable to be used out of the specified range of operation voltage. If needed, please use suitable voltage regulation device.

Protection from lightning

There is lighting-strike over-current device inside the Drive which protects it against lighting.

Derating due to altitude

Derating must be considered when the drive is installed at high altitude, greater than 1000m. This is because the cooling effect of drive is deteriorated due to the thin air, as shown in Fig.1-3 that indicates the relationship between the altitude and rated current of the driver.

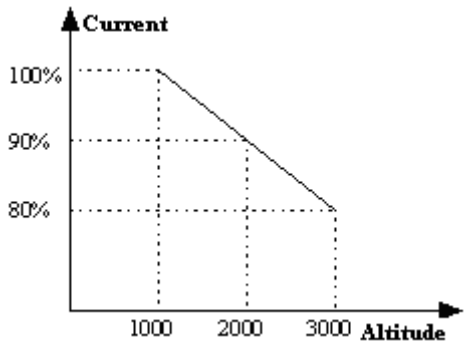

Fig. 1-3 Derating Drive's output current with altitude

1.4 Disposing Unwanted Driver

When disposing the VFD, pay attention to the following issues:

The electrolytic capacitors in the driver may explode when they are burnt.

Poisonous gas may be generated when the plastic parts like front covers are burnt.

Please dispose the drive as industrial waste.

Chapter 2 Product introduction

In this chapter we introduce the basic product information of specifications, model, and structure and so on.

2.1 General specifications

Table 2-1 General specifications

Item		Description
Input	Rated voltage and frequency	4T:3-phase,380V～440V AC; 50Hz/60Hz; 2T: 3-phase, 200V~240V;50Hz/60Hz 2S:Single-phase,200V~240V;50Hz/60Hz
	Allowable voltage range	4T: 320V～460V AC; 2T/2S:180V~260V;Voltage tolerance＜3%; Frequency: ±5%
Output	Rated voltage	0~Rated input voltage
	Frequency	0Hz～300Hz(Customized 0Hz~3000Hz)
	Overload capacity	G type : 150% rated current for 1 minute, 180% rated current for 10 seconds; L type :110% rated current for 1 minute, 150% rated current for 1 second
Control Characteristics	Control mode	Vector control without PG, Vector control with PG; V/F control
	Modulation mode	Space vector PWM modulation
	Starting torque	0.5Hz 150%rated torque（Vector control without PG）, 0Hz 200% rated torque（Vector control with PG）
	Frequency accuracy	Digital setting：Max frequency ×±0.01%；Analog setting：Max. frequency ×±0.2%
	Frequency resolution	Digital setting: 0.01Hz；Analog setting: Max frequency×0.05%
	Torque boost	Manual torque boost :0%～30.0%
	V/F pattern	4 patterns: 1 kind of V/F curve mode set by user and 3 kinds of torque-derating modes (2.0 order, 1.7 order, and 1.2 order)
	Acc/Dec curve	Linear acceleration/deceleration, Four kinds of acceleration/deceleration time are optional
	Auto current limit	Limit current during the operation automatically to prevent frequent over-current trip
Customized function	Jog	Range of jog frequency: 0.20Hz~50.00Hz; Acc/Dec time of Jog operation: 0.1~60.0s, Interval of Jog operation is also settable.
	Multiple speed operation	Implement multiple speed operation by digital inputs
Operation function	Operation command	Keypad setting, terminal setting, communication setting
	Frequency command setting	Digital setting, Analog voltage setting, Analog current setting, Pulse setting

	Auxiliary frequency setting	Implement flexible auxiliary frequency trim and frequency synthesis.
	Pulse output terminal	0.1~100kHz pulse output. For example setting frequency, output frequency etc.
	Analog output terminal	2 channels analog output (0/4~20mA or 0/2~10V). For example setting frequency, output frequency etc.
Operation panel	LED Display	Display frequency setting, frequency output, voltage output, current output and so on, about 20 parameters.
	Parameters copy	Copy parameters by operation panel.
	Keys lock and function selection	Lock part of keys or all the keys. Define the function of part of keys, in case of misoperation.
Protection function		Open phase protection (optional), overcurrent protection, overvoltage protection, undervoltage protection, overheat protection, and overload protection and so on.
Environment	Operating site	Indoor, installed in the environment free from direct sunlight, dust, corrosive gas, combustible gas, oil mist, steam and drip.
	Altitude	Derated above 1000m, the rated output shall be decreased by 10% for every rise of 1000m
	Ambient temperature	-10℃~40℃, derated at 40℃~ 50℃
	Humidity	5%~95%RH, non-condensing
	Vibration	Less than 5.9m/s² (0.6g)
	Storage temperature	－40℃～＋70℃
Structure	Protection class	IP20
	Cooling method	Air cooling, with fan control.
Installation method		Wall-mounted
Efficiency		Power under 45kW≥93%；Power above 55kW≥95%

2.2 Introduction of product series

Table 2-1 Series of Kinco VFD

Model of VFD	Rated capacity（kVA）	Rated input current（A）	Rated output current（A）	Motor power（kW）
□V100-2S-0004G	1.0	5.3	2.5	0.4
□V100-2S-0007G	1.5	8.2	4.0	0.75
□V100-2S-0015G	3.0	14.0	7.5	1.5
□V100-2S-0022G	4.0	23.0	10.0	2.2
□V100-2S-0037G	6.4	32.0	16.0	3.7
□V100-2T-0004G	1.0	3.2	2.5	0.4

□V100-2T-0007G	1.5	6.3	4.0	0.7
□V100-2T-0015G	3.0	9	7.5	1.5
□V100-2T-0022G	4.0	15	10	2.2
□V100-2T-0037G	6.1	22	16	3.7
□V100-2T-0055G	9.4	30	24.5	5.5
□V100-2T-0075G	12	35	30	7.5
□V100-2T-0110G	16	43	42	11
□V100-2T-0150G	21	56	55	15
□V100-2T-0185G	27	71	70	18.5
□V100-2T-0220G	31	81	80	22
□V100-4T-0007G	1.5	3.4	2.3	0.75
□V100-4T-0015G	3.0	5.0	3.7	1.5
□V100-4T-0022G	4.0	5.8	5.5	2.2
□V100-4T-0037G	5.9	10.5	8.8	3.7
□V100-4T-0055G	8.5	14.5	13.0	5.5
□V100-4T-0075G	11.0	20.5	17.0	7.5
□V100-4T-0110G	17.0	26.0	25.0	11
□V100-4T-0150G	21.0	35.0	32.0	15
□V100-4T-0185G	24.0	38.5	37.0	18.5
□V100-4T-0220G	30.0	46.5	45.0	22
□V100-4T-0300G	40.0	62.0	60.0	30
□V100-4T-0370G	50.0	76.0	75.0	37
□V100-4T-0450G	60.0	92.0	90.0	45
□V100-4T-0550G	72.0	113.0	110.0	55
□V100-4T-0750G	100.0	157.0	152.0	75
FV100-4T-0900G	116.0	180.0	176.0	90
FV100-4T-1100G	138.0	260.0	210.0	110
FV100-4T-1320G	167.0	232.0*	252.0	132
FV100-4T-1600G	200.0	282.0*	304.0	160
FV100-4T-1850G	230.0	326.0*	350.0	185
FV100-4T-2000G	250.0	352.0*	380.0	200
FV100-4T-2200G	280.0	385.0*	426.0	220
FV100-4T-2500G	320.0	437.0*	470.0	250
FV100-4T-2800G	445.0	491.0*	520.0	280

FV100-4T-3150G	500.0	580.0*	600.0	315
FV100-4T-3550G	565.0	624.0*	665.0	355
FV100-4T-4000G	630.0	670.0*	690.0	400

2.3 Structure of VFD

The structure of VFD is as following figure.

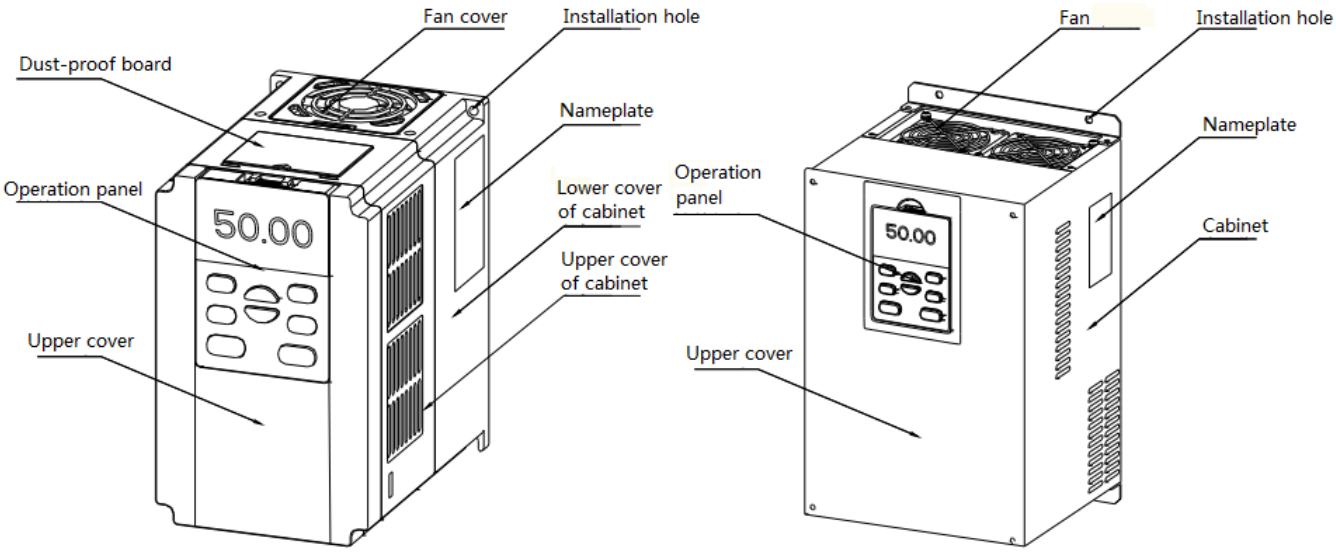

☐V100-2S/2T/4T-0037G and below power ☐V100-2T/4T-0055G and above power

Fig.2-1 Structure chart of VFD

2.4 External dimension and weight

2.4.1 External dimension and weight

External dimension and weight is as following figure.

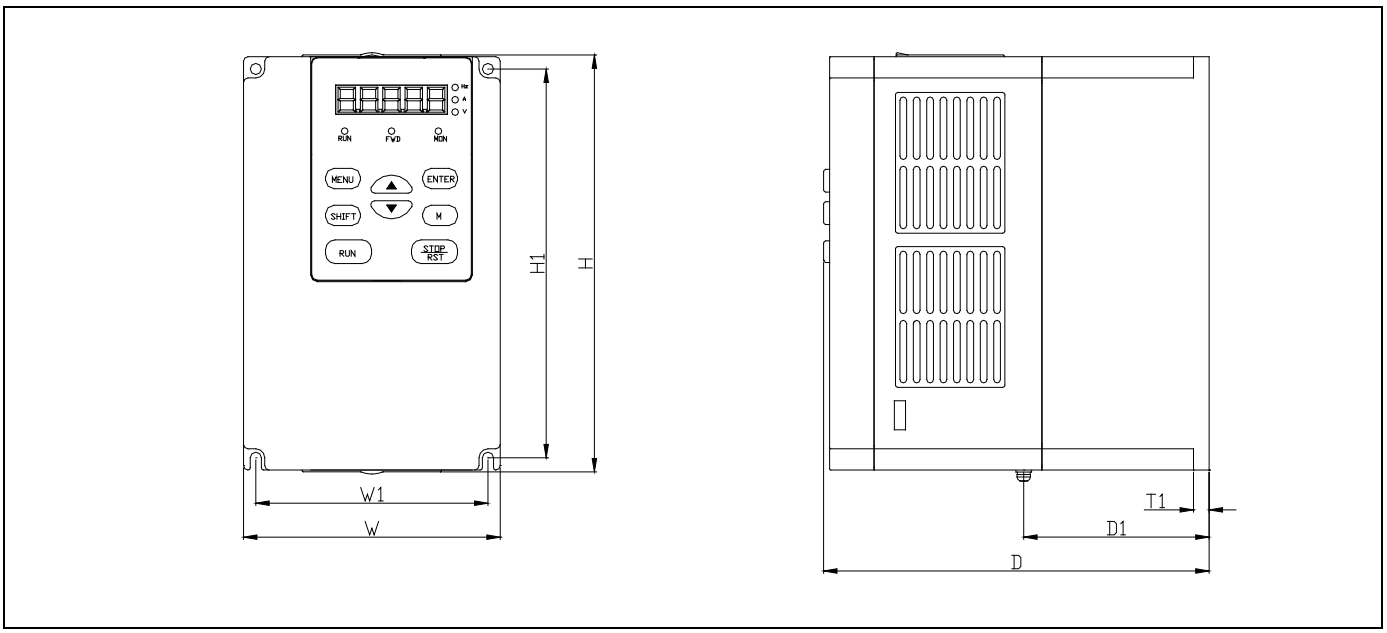

Fig 2-2 □V100-2S/2T/4T-0037G and lower power VFD

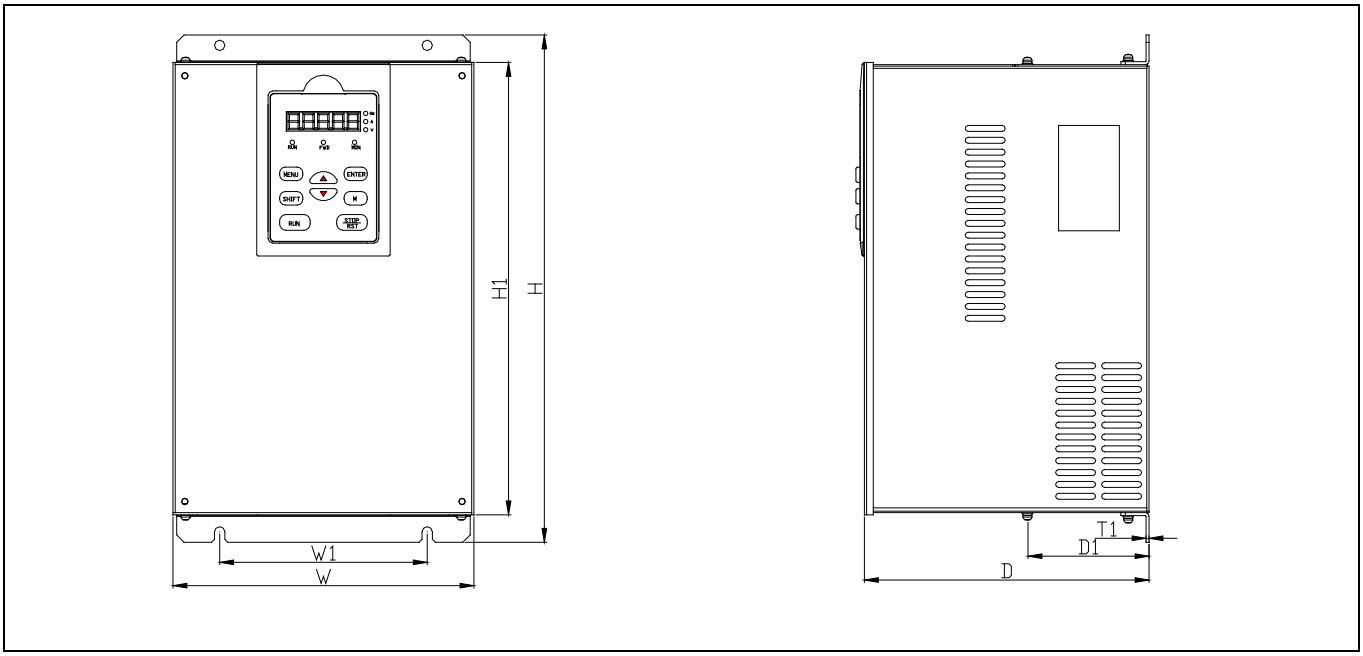

Fig 2-3 □V100-2T/4T-0055G～FV100-4T-4000G

Table 2-2 Mechanical parameters

VFD model（G：Constant torque load; L: Draught fan and water pump load）	External dimension and (mm)								Weight (kg)
	W	H	D	W1	H1	D1	T1	Installation hole(d)	
□V100-2S-0004G	115	185	171	106	176	65	7	5	2
□V100-2S-0007G									
□V100-2S-0015G									
□V100-2S-0022G									
□V100-2S-0037G									
□V100-2T-0004G									
□V100-2T-0007G									
□V100-2T-0015G									
□V100-2T-0022G									
□V100-2T-0037G									
□V100-4T-0007G									
□V100-4T-0015G									
□V100-4T-0022G									
□V100-4T-0037G									
□V100-2T-0055G	165	274	193	110	264	-	2	6	6
□V100-2T-0075G									
□V100-4T-0055G									
□V100-4T-0075G									
□V100-2T-0110G	194	324	197	120	312	-	2	6	8
□V100-4T-0110G									
□V100-4T-0150G									
□V100-4T-0185G									
□V100-2T-0150G	297	451	224	200	433	89	3	7	18
□V100-2T-0185G									
□V100-2T-0220G									
□V100-4T-0220G									
□V100-4T-0300G									
FV100-4T-0370G	320	535	224	220	512	89	3	10	31
FV100-4T-0450G									

FV100-4T-0550G	373	649	262	240	628	103	3	10	42
FV100-4T-0750G									
FV100-4T-0900G	430	780	330	280	755	168	3	11	76
FV100-4T-1100G									
FV100-4T-1320G									
FV100-4T-1600G	530	940	380	340	910	206	4	14	114
FV100-4T-1850G									
FV100-4T-2000G									
FV100-4T-2200G	690	1006	380	500	974	207	4	14	156
FV100-4T-2500G									
FV100-4T-2800G									
FV100-4T-3150G	810	1228	400	520	1196	209	4	14	225
FV100-4T-3550G									
FV100-4T-4000G									

2.4.2 Operation panel and installation box

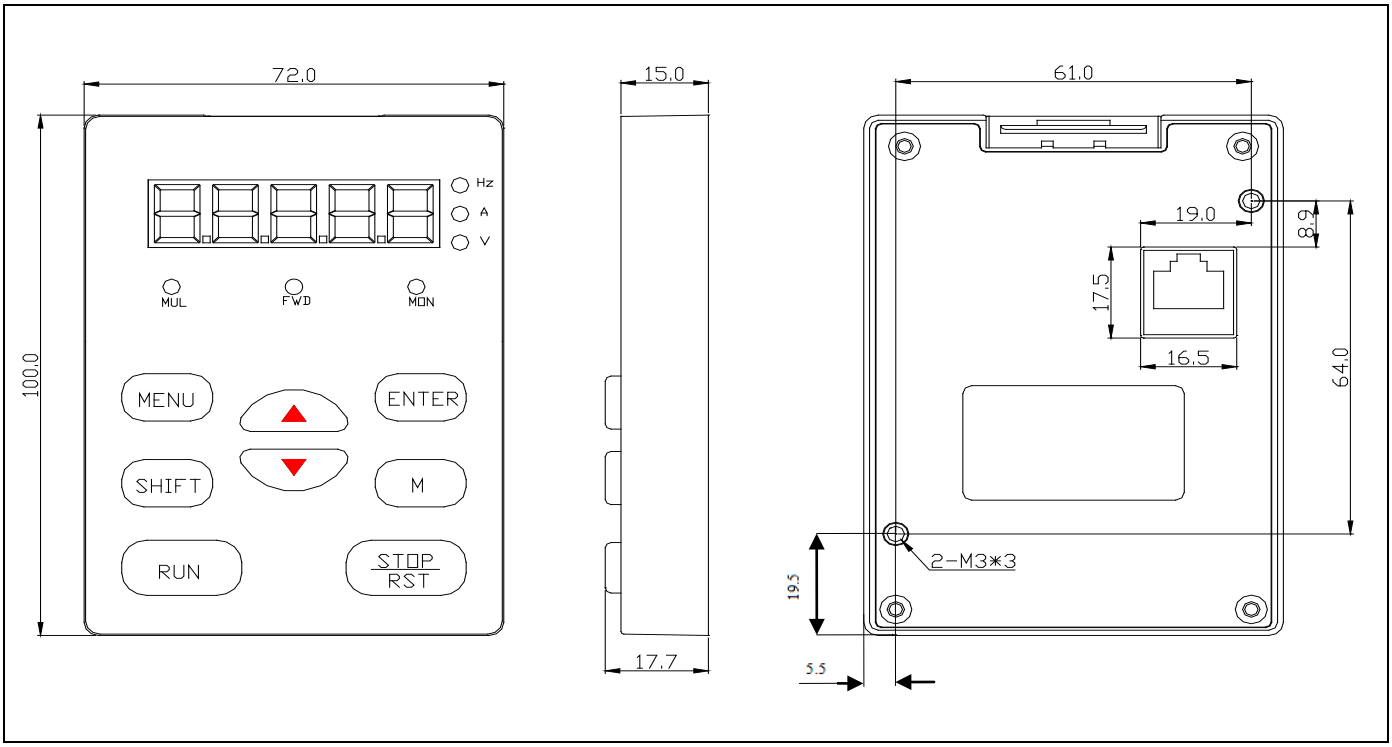

Fig 2-4 Operation panel dimension

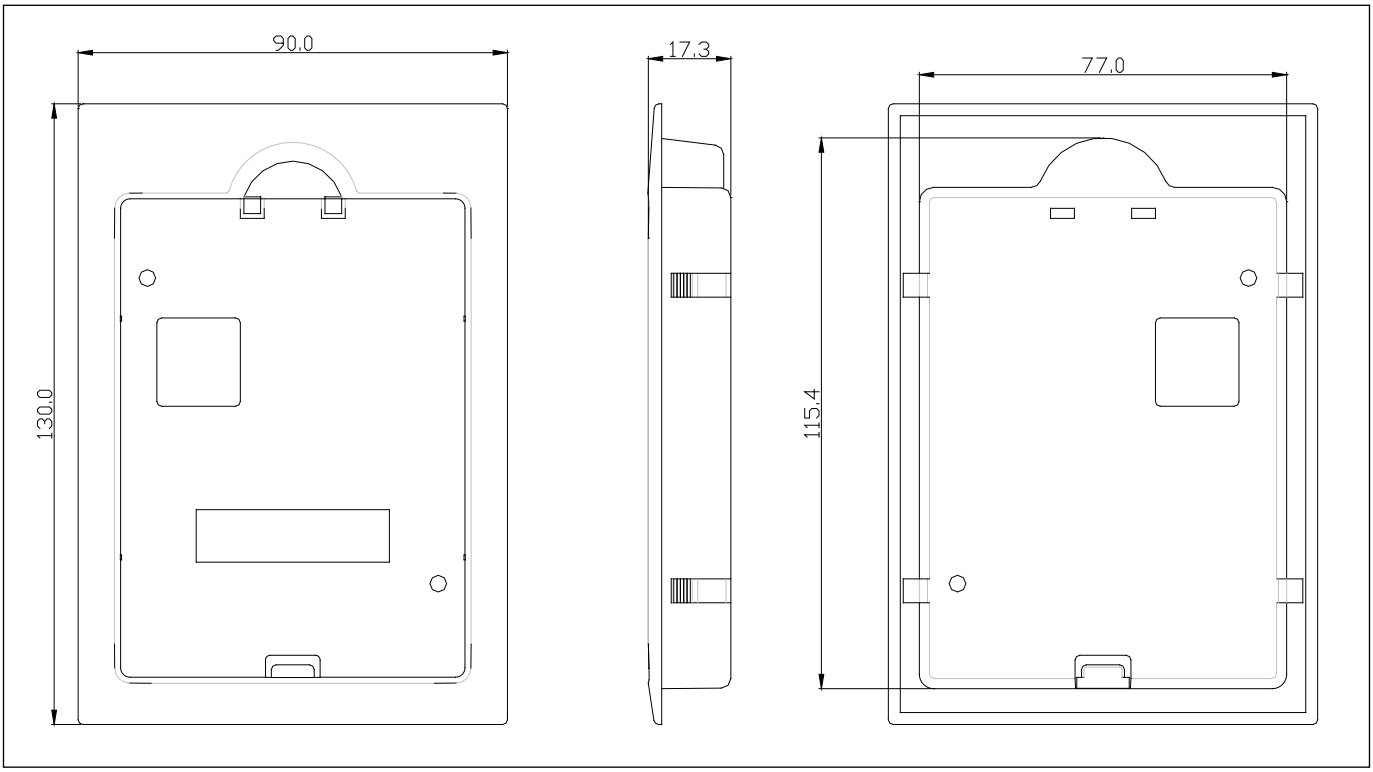

Fig 2-5 Installation box dimension

2.4.3 Braking Resistor Selection

VFD Model	Braking Unit	Braking resistor			
		Standard resistance	Qty.	Min. resistance	Standard power
□V100-2S-0004G	Built-in	200Ω	1	100Ω	100W
□V100-2S-0007G		150Ω	1	100Ω	150W
□V100-2S-0015G		150Ω	1	100Ω	150W
□V100-2S-0022G		50Ω	1	35Ω	400W
□V100-2S-0037G		45Ω	1	35Ω	450W
□V100-2T-0004G		200Ω	1	100Ω	100W
□V100-2T-0007G		150Ω	1	100Ω	150W
□V100-2T-0015G		150Ω	1	100Ω	150W
□V100-2T-0022G		50Ω	1	35Ω	400W
□V100-2T-0037G		45Ω	1	35Ω	450W
□V100-2T-0055G		50Ω	1	25Ω	1600W
□V100-2T-0075G		40Ω	1	25Ω	2000W
□V100-2T-0110G		27.2Ω	1	20Ω	2000W
□V100-4T-0007G		750Ω	1	125Ω	110W
□V100-4T-0015G		400Ω	1	100Ω	260W
□V100-4T-0022G		250Ω	1	100Ω	320W
□V100-4T-0037G		150Ω	1	66.7Ω	550W
□V100-4T-0055G		100Ω	1	66.7Ω	800W
□V100-4T-0075G		75Ω	1	66.7Ω	1070W
□V100-4T-0110G		50Ω	1	25Ω	1600W
□V100-4T-0150G		40Ω	1	25Ω	2000W
□V100-4T-0185G		32Ω	1	20Ω	4800W
□V100-2T-0150G	Built-in (optional)	20	1	14	2000W
□V100-2T-0185G		16	1	14	4800W
□V100-2T-0220G		13.6	1	10	4800W
□V100-4T-0220G		27.2Ω	1	20Ω	4800W
□V100-4T-0300G		20Ω	1	14Ω	6000W
□V100-4T-0370G		16Ω	1	14Ω	9600W
□V100-4T-0450G	External	13.6Ω	1	10Ω	9600W
□V100-4T-0550G		20Ω	2	7Ω（Paralleled resistance）	6000W*2
□V100-4T-0750G		13.6Ω	2	5Ω（Paralleled resistance）	9600W*2

□V100-4T-0900G		13.6Ω	2	5Ω（Paralleled resistance）	9600W*2
FV100-4T-1100G		5Ω	4	3.5Ω（Paralleled resistance）	6000 W*4
FV100-4T-1320G		5Ω	4	3.5Ω（Paralleled resistance）	6000W*4
FV100-4T-1600G		3Ω	6	2.5Ω（Paralleled resistance）	6000 W*6

Chapter 3 Installation Environment

In this chapter we introduce the installation environment of VFD

Please mount the drive vertically inside a well-ventilated location.

When considering mounting environment, the following issues should be taken into account:

- Ambient temperature should be within the range of-10℃~40℃. If the temperature is higher than 40 ℃, the drive should be derated and forced ventilation is required;
- Humidity should be lower than 95%,non-condensing
- Install in the location where vibration is less than 5.9m/s² (0.6g);
- Install in the location free of direct sunlight.
- Install in the location free of dust, metal powder.
- Install in the location free of corrosive gas or combustible gas.

If there are any special requirements for installation, please contact us for clarifications.

The requirements on mounting space and clearance are shown in Fig. 3-1 and Fig. 3-2.

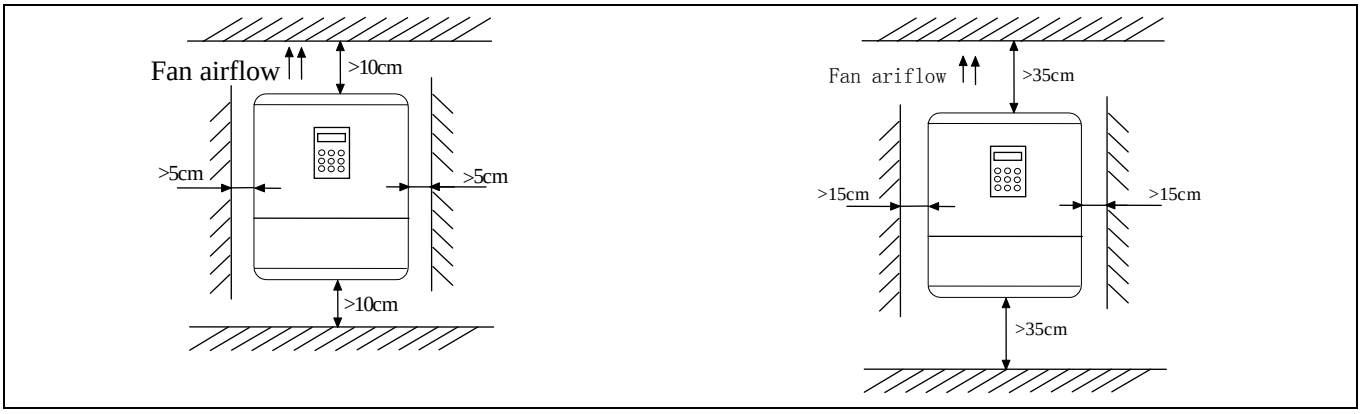

Fig 3-1 Installation interval （Power below 45kW） Fig 3-2 Installation interval（Power above 55kW）

When two VFD are mounted and one is on the top of another, an air flow diverting plate should be fixed in between them as shown in Fig. 3-3.

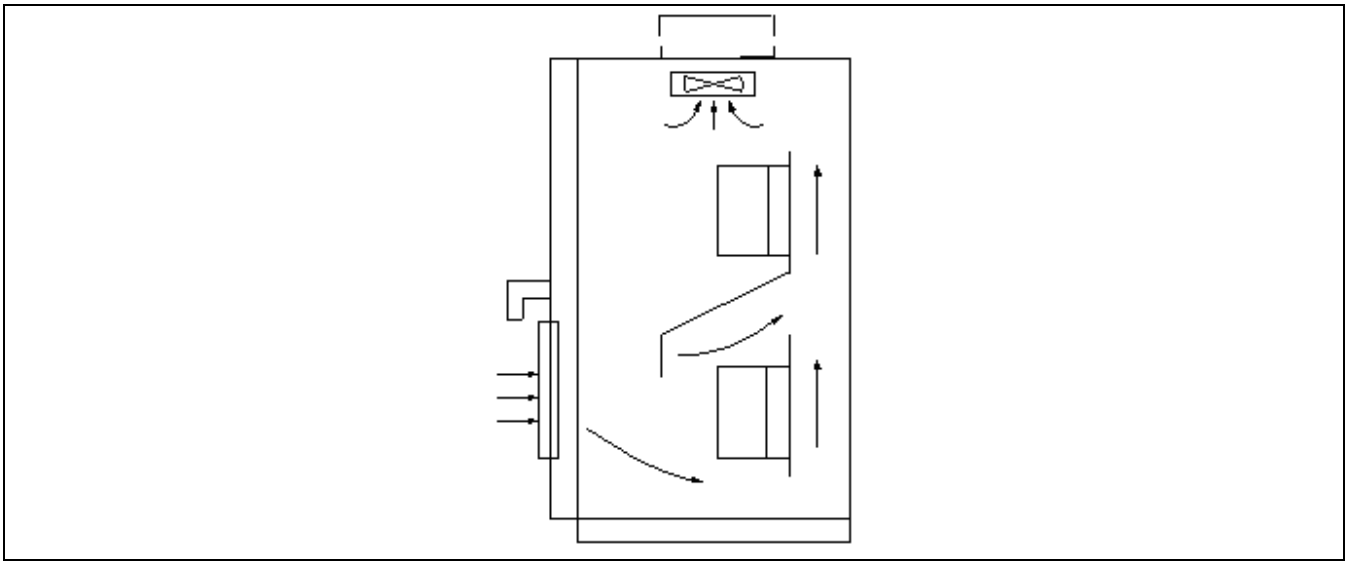

Fig 3-3 Installation of several VFD

Chapter 4 Wiring Guide of VFD

In this chapter we introduce the wiring of VFD

⚠ Danger
·Wiring can only be done after the drive's AC power is disconnected, all the LEDs on the operation panel are off and waiting for at least 10 minutes. Then, you can remove the panel. ·Wiring job can only be done after confirming the charge indicator on the right bottom is off and the voltage between main circuit power terminals + and - is below DC36V. ·Wire connections can only be done by trained and authorized person ·Check the wiring carefully before connecting emergency stop or safety circuits. ·Check the drive's voltage level before supplying power to it, otherwise human injuries or equipment damage may happen.

⚠ Attention
·Check whether the Variable Speed Drive's rated input voltage is in compliant with the AC supply voltage before using. ·Dielectric strength test of the drive has been done in factory, so you need not do it again. ·Refer to chapter 2 on connected braking resistor or braking kit. ·It is prohibited to connect the AC supply cables to the drive's terminals U, V and W. ·Grounding cables should be copper cables with section area bigger than 3.5mm², and the grounding resistance should be less than 10Ω. ·There is leakage current inside the drive. The total leakage current is greater than 3.5mA, depending on the usage conditions. To ensure safety, both the drive and the motor should be grounded, and a leakage current protector (RCD) should be installed. It is recommended to choose B type RCD and set the leakage current at 300mA. ·The drive should be connected to the AC supply via a circuit breaker or fuse to provide convenience to input over-current protection and maintainance.

4.1 Wiring and Configuration of Main circuit terminal

4.1.1 Terminal Type of Main Loop's Input and Output

Terminal Type

Applicable models：SV/FV100-2S-0004G～SV/FV100-2S-0022G

Bottom	L	N	⊖	B1	⊕/B2	U	V	W	PE

Applicable models：SV/FV100-2T/4T-0007G～SV/FV100-2T/4T-0037G

Bottom	R	S	T	⊖	⊕/B1	B2	U	V	W	PE

Applicable models：SV/FV100-2T/4T-0055G～SV/FV100-2T/4T-0150G

Bottom	R	S	T	⊖	⊕1	⊕2/B1	B2	U	V	W	PE

Applicable models：SV/FV100-2T/4T-0185G～SV/FV100-4T-0370G

Bottom	B2	R	S	T	⊖	⊕1	⊕2/B1	U	V	W	PE

Applicable models：SV/FV100-4T-0450G～SV/FV100-4T-0750G

Top	R	S	T

Bottom	⊕1	⊕2	⊖	U	V	W	PE

Applicable models：FV100-4T-0900G～FV100-4T-1320G

Top	R	S	T	⊖

Bottom	⊕1	⊕2	U	V	W	⏚

Applicable models：FV100-4T-1600G～FV100-4T-4000G

Top	R	S	T	⊖

Bottom	⊕1	⊕2	⏚	U	V	W

Table 4-1 Description of main loop terminal

Terminal name	Function description
L、N	Single phase 220VAC input terminal
R、S、T	3-phase 380V AC input terminal
⊖	DC negative bus output terminal
⊕1、⊕2	Reserved terminal for external DC reactor
⊕2、⊖	External braking unit
B1、B2	Braking resistor terminal
U、V、W	3-phase AC output terminal
PE	Shield PE terminal

4.1.2 Wiring of VFD for Basic Operation

Applicable model: FV100-4T-0055G

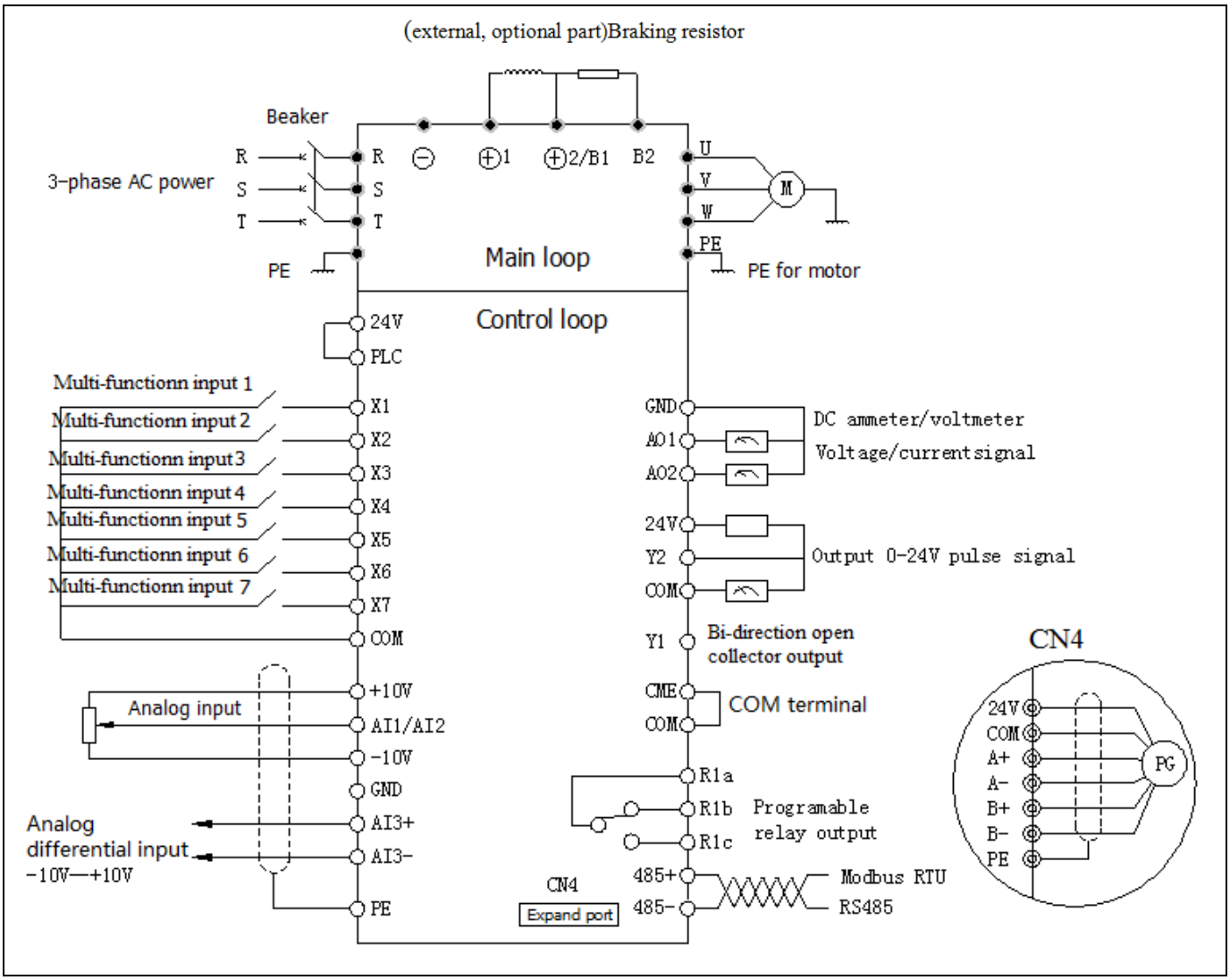

Fig.4-1 Basic wiring chart

4.2 Wiring and configuration of control circuit

4.2.1 Wiring of control circuit terminal.

Wire the terminals correctly before using the Drive. Refer to the table 4-2 for control circuit terminal function

Table 4-2 Control circuit terminal function

Sequence No.	Function
1	Analog input and output terminal, RS232 and RSRS485 communication port

Note

It is recommended to use cables bigger than 1mm2 to connect to the terminals.

Arrangement of control circuit terminals is as follows

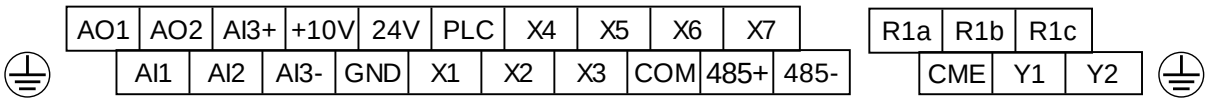

Fig.4-2 Arrangement of control terminals

Refer to table 4-3 and 4-4 for description of each terminal

Table 4-3 function list of each list

Category	Terminals	Name	Function description	Specification
Shield	⏚	Shielded PE	PE terminal connected to shielding layer. 485 communication cable, Analog signal cable, motor power cable shield can be connected to this terminal here	Connected to PE terminal of main loop inside
Power supply	+10	+10V Power supply	Provide +10V power supply	Maximum current output is 5mA
	GND	+10V GND of Power supply	GND for analog signal and 10V power supply	Isolated from COM and CME inside
Analog input	AI1	Signal-ended input AI1	Can accept analog voltage or current input, jumper AI1 can select voltage or current input mode. (Reference ground: GND)	Input voltage range: -10V～10V（Input impedance 45 kΩ） Resolution: 1/4000 Input current range : 0mA～20 mA, Resolution: 1/2000(Need jumper)
	AI2	Signal-ended input AI2	Can accept analog voltage or current input, jumper AI2 can select voltage or current input mode. (Reference ground: GND)	
	AI3+	Analog voltage differential input AI3+ or analog voltage single-ended input	When connected to the analog voltage differential input, AI3+ is the same-phase input and AI3- is the inverted phase input; when connected to the analog voltage single-ended input, AI3+ is signal input, AI3- should connect to GND (Reference ground: GND)	Input voltage range: -10V~+10V (Input resistor: 15kΩ) Resolution: 1/4000
	AI3-	Analog voltage differential input AI3- or analog voltage single-ended input		

Category	Terminals	Name	Function description	Specification
Analog output	AO1	Analog output 1	Providing analog voltage or current output, they are selected by the jumper AO1. The default setting is output voltage, refer to the function code A6.28 for detail.(Reference ground: GND)	Voltage output range: 0V~10V Current output range: 0/4~20mA
	AO2	Analog output 2	Providing analog voltage or current output, they are selected by the jumper AO2. The default setting is output voltage, refer to the function code A6.29 for detail.(Reference ground: GND)	Voltage output range: 0V~10V Current output range: 0/4~20mA
Communication	RS485+	RS485 communication port	485+	Standard RS-485 communication port, please use twisted-pair cable or shielded cable.
	RS485-		485-	
Multi-function input terminal	X1	Multi-function input terminal 1	Can be defined as multi-function digital input terminal.(Refer to the A6 group, form A6.00 to A6.06)	Optocoupler isolation input Input resistor: R=3.3kΩ Maximum frequency input of X1~X6: 200Hz Maximum input frequency of X7: 100kHz Input voltage range:2~30v 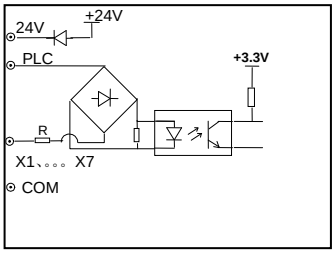
	X2	Multi-function input terminal 2		
	X3	Multi-function input terminal 3		
	X4	Multi-function input terminal 4		
	X5	Multi-function input terminal 5		
	X6	Multi-function input terminal 6		
	X7	Multi-function input terminal 7		
Multi-function output terminal	Y1	Bi-direction open-collector output	Can be defined as multi-function digital output terminal , refer to the A6.14 for detail (Com port: CME)	Optocoupler isolation output Maximum working voltage: 30v Maximum output current: 50mA
	Y2	Open collector pulse terminal	Can be defined as multi-function pulse signal output terminal , refer to the A6.25 for detail(Com port: CME)	Maximum output frequency: 100kHz(Depend on the A6.26)
Power supply	24V	＋ 24V power supply	Providing +24V power for others	Maximum output current: 200mA

Category	Terminals	Name	Function description	Specification
Common port	PLC	Common port of multi-function input	Common port of Multi-function input (Short cut with 24V in default)	Common port of X1~X7, PLC is isolated from 24V internally
	COM	Common port of 24V power supply	Three common ports in all, cooperate with other terminals	COM is isolated from CME and GND inside the drive
	CME	common port of Y1output	Common port of multi-function output terminal Y1	
Relay output terminal 1	R1a	Relay output	Can be defined as multi-function relay output terminal(Refer to the A6.16 for detail)	R1a-R1b：Normally closed， R1a-R1c：normally open Contact capacity ： AC250V/2A（COSΦ＝1） AC250V/1A（COSΦ＝0.4） DC30V/1A Input voltage for overvoltage class of relay output terminal is overvoltage class II
	R1b			
	R1c			

Wiring of analog input

1） AI1, AI2 can be connected to analog voltage or current single-ended input. Use a jumper can select AI1 as Voltage model and AI2 as current mode. The wiring is as follows:

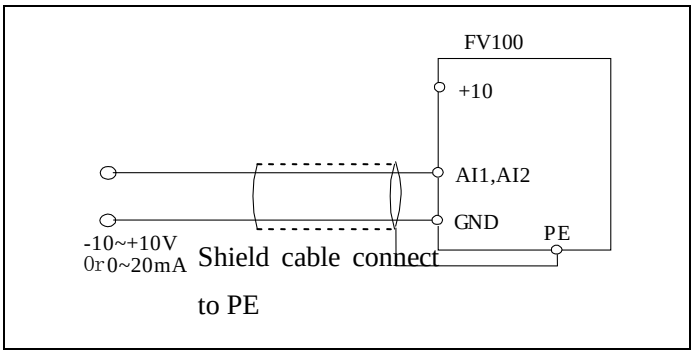

Fig 4-3 AI1，AI2 terminal wiring

2） AI3+，AI3- can be connected to the analog differential or single-ended input , the wiring is as follows:

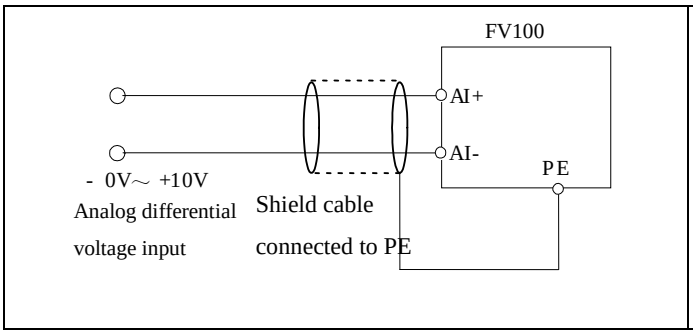

Fig 4-4 AI+，AI- differential voltage input wiring

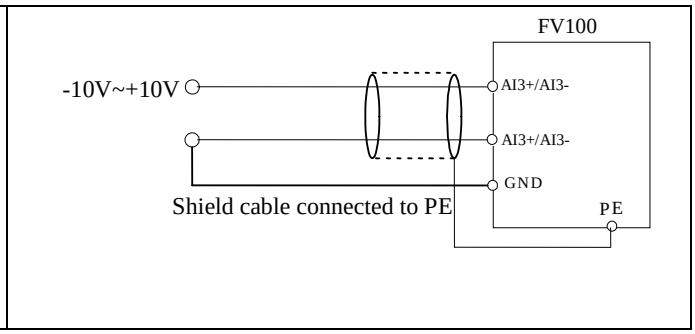

Fig 4-5 AI+，AI- single-ended voltage input wiring

Wiring of analog output terminal

If the analog output terminals AO1 and AO2 are connected to analog meters, then various kinds of physical values can be measured. The jumper can select current output (0/4~20mA) or voltage output (0/2~10V). The wiring is as follows:

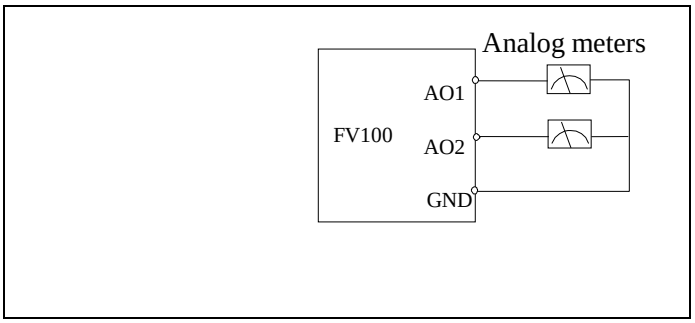

Fig.4-6 Wiring of analog output

Notes:

1. When using analog input, a filter capacitor common mode inductor can be installed between signal input and GND
2. The analog input voltage is better under 15V.
3. Analog input and output signals are easily disturbed by noise, so shielded cables must be used to transmit these signals and the cable length should be as short as possible.
4. The analog output terminal can stand the voltage under 15V

Wiring of multiple function input terminal and operation terminal

FV100 multi-function input terminal uses a full-bridge rectifying circuit as shown in Fig.4-7. PLC is the common terminal of terminals X1~X7, The current flows through terminal PLC can be pulling current and the feeding current. Wiring of X1~X7 is flexible and the typical wiring are as follows:

1. Dry contacts method

1) Use the internal 24V power supply of VFD, the wiring is as in fig.4-7.

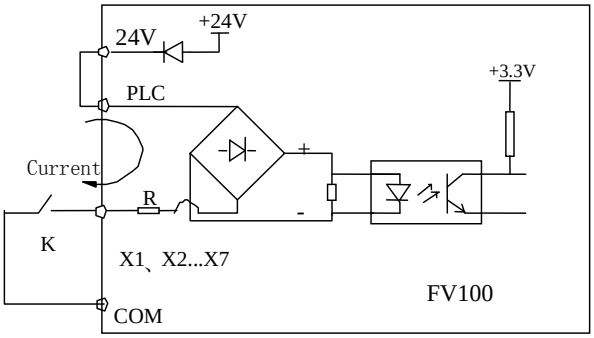

Fig.4-7 Wiring method of using the internal 24V power supply

2) Use external power supply, (The power supply must satisfy the UL CLASS 2 standard and a 4A fuse must be

added between the power supply and terminal), the wiring is as Fig.4-8 (Make sure the PLC and 24V terminal is disconnected)

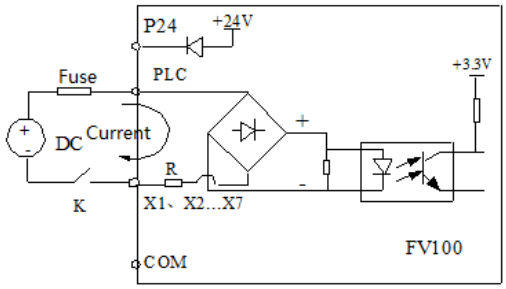

Fig.4-8 Wiring of external power supply

2. Source/drain connection method

1) Use internal +24V power supply of VFD and the external controller uses NPN transistors whose common emitter are connected, as shown in the fig.4-9

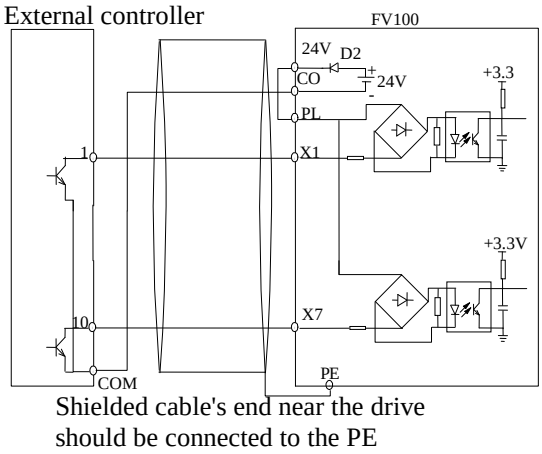

Fig.4-9 Use internal power supply for Source connection

2) Use internal +24V power supply and the external controller uses PNP transistors whose common emitter are connected, as shown in the fig 4-10(Make sure the PLC and 24V terminal is disconnected). The wiring is as shown in fig.4-10

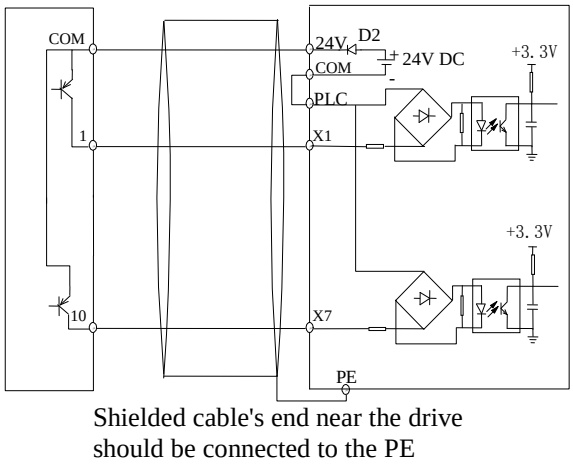

Fig 4-10 Use internal power supply for drain connection

3) Use external power supply for source connection (Make sure the PLC and 24V terminal is disconnected). As shown in the fig.4-11

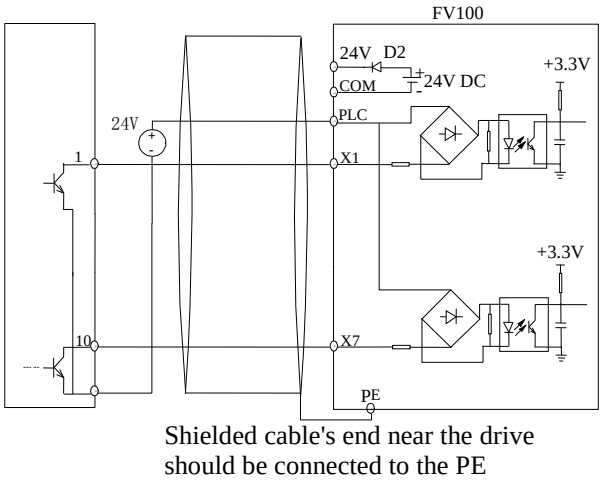

Fig 4-11 Use external power supply for source connection

4) Use external power supply for drain connection (Make sure the PLC and 24V terminal is disconnected). As shown in the fig 4-12

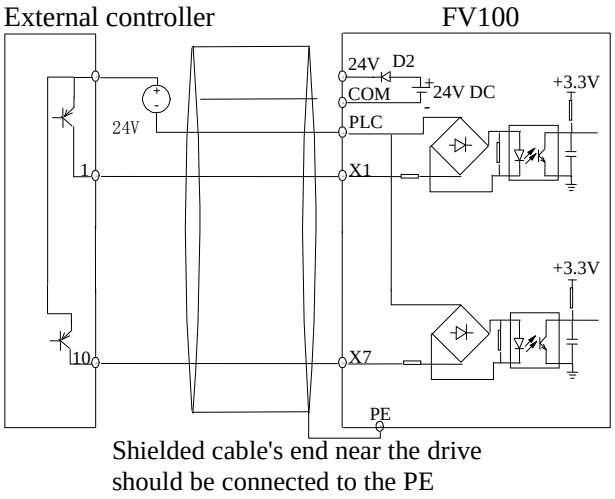

Fig 4-12 Use external power supply for drain connection

Multi-function output terminal wiring

1. Multi-function output terminal Y1 can use the internal 24 power supply, the wiring is as shown in Fig.4-13

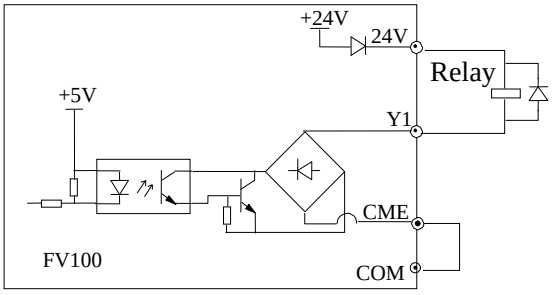

Fig 4-13 Wiring method 1 of multi-function output terminal Y1

2. Multi-function output terminal Y1can use the external 24 power supply too, the wiring is as shown in Fig.4-14.

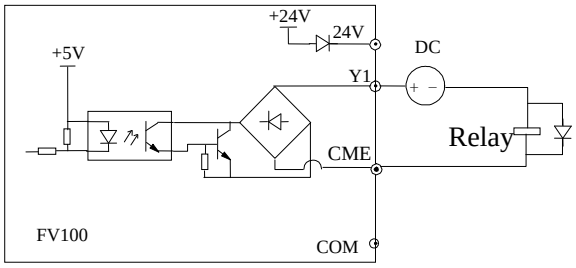

Fig 4-14 Wiring method 2 of multi-function output terminal Y1

3. Y2 can also be used as pulse frequency output, If Y2 uses the internal 24V power supply. The wiring is shown in Fig.4-15.

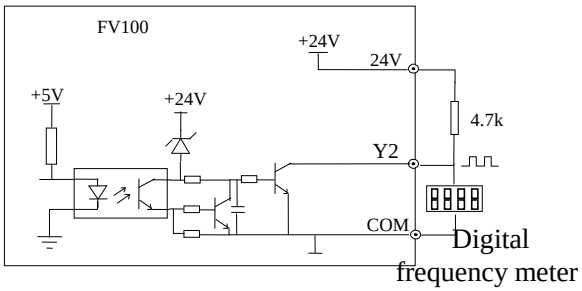

Fig 4-15 Wiring method 1 of output terminal Y2

4. When Y2 is used as a digital pulse frequency output, it can also use the external power supply. The wiring is shown in Fig.4-16

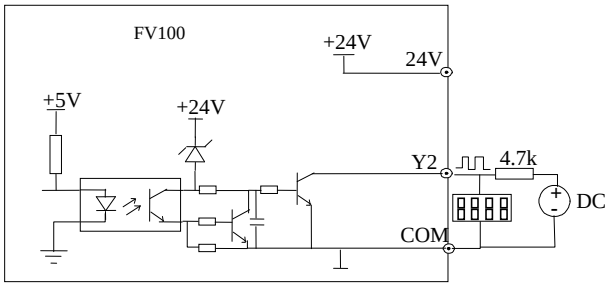

Fig.4-16 Wiring method 2 of output terminal Y2

Wiring of relay output terminals R1a, R1b and R1c

If the drive drives an inductive load (such as electromagnetic relays and contactor), then a surge suppressing circuit should be added, such as RC snubbing circuit (Notice that the leakage current must be smaller than the holding current of the controlled relay or contactor) and varistor or a free-wheeling diode (Used in the DC electric-magnetic circuit and pay attention to the polarity when installing). Snubbing components should be as close to the coils of relay or contactor as possible.

5. Attentions for encoder (PG) wiring

Connection method of PG signal must be corresponding with PG model. Differential output, open collector output and push-pull output encoder wirings are shown in Fig.4-17, 4-18 and 4-19.

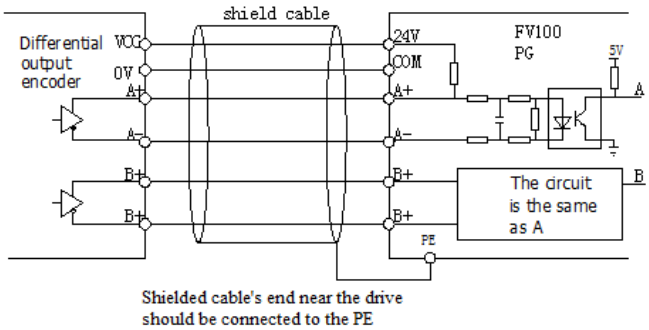

Fig 4-17 Wiring of differential output encoder

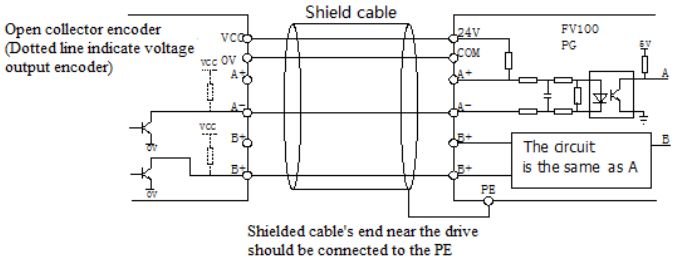

Fig.4-18 Wiring of open collector output encoder

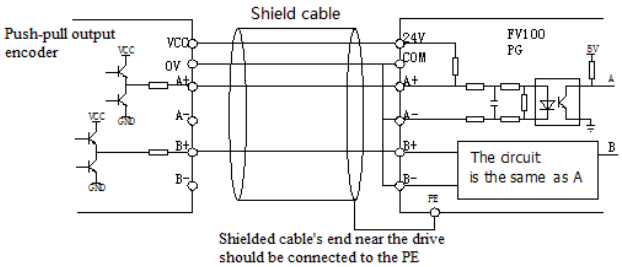

Fig.4-19 Wiring of push-pull output encoder

Note

1. Don't short circuit terminals 24V and COM, otherwise the control board may be damaged.

2. Please use multi-core shielded cable or multi-stranded cable (above 1mm²) to connect the control terminals.3. When using a shielded cable, the shielded layer's end that is nearer to the drive should be connected to PE.

4. The control cables should be as far away(at least 20cm) from the main circuits and high voltage cables as possible (including power supply cables, motor cables, relay cables and contactor cables and so on). The cables should be vertical to each other to reduce the disturbance to minimum.

5. The resistors R in Fig. 4-13 and Fig.4-14 should be removed for 24V input relays, and the resistance of R should be selected according the parameters of relay for non-24V relay.

6. Digital output terminal can not stand the voltage higher than 30V

Chapter 5 Operation Instructions of Kinco VFD

In this chapter we introduce the necessary knowledge of Kinco VFD and related operations.

5.1 Using Operation Panel

5.1.1 Operation panel appearance and keys' function description

Operation panel is used to setup the drive and display parameters, it is LED display. As shown in Fig.5-1

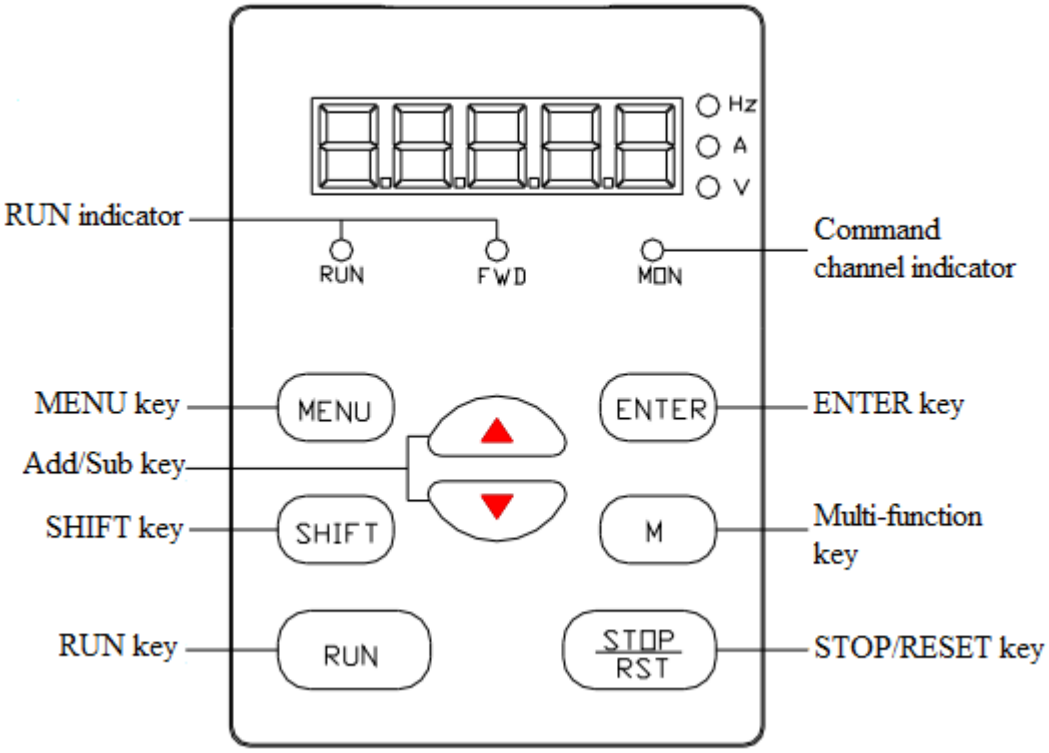

Fig.5-1 Illustration of operation panel

There are 8 keys on the operation panel and functions of each key are shown in Table 5-1.

Table 5-1 Function list of operation panel

Key	Name	Function
MENU	Program/exit key	Enter or exit programming status
ENTER	Function/data key	Enter next level menu or confirm data
∧	Increase key	Increase data or parameter
∨	Decrease key	Decrease data or parameter
SHIFT	Shift key	In editing status, press this key to select the Bit to be modified. In other status, this key is used to switch the parameters to display.
M	Multi-function key	Use the b4.01 to configure the function of this key
RUN	Run key	In panel control mode, press this key to run the drive.
STOP/RST	Stop/reset key	Press this key to stop or reset the drive.

5.1.2 Function Descriptions of LED and Indicators

The operation panel consists of a 5-digits eight segments LED display, 3 LED indicators for unit and 3 LED indicators for status which is as shown in Fig.5-1. The LED display can display the status parameters, function codes and error codes of the drive. The 3 unit indicators are corresponding to three units, the descriptions of three status indicator are shown in table 5-2

Table 5-2

Indicator	Status	Current status of drive
Operating status indicator(RUN)	Off	Stop
	On	Run
Operating direction indicator(FWD)	Off	Forwards
	On	Reverse
Operating mode indicator(MON)	On	Controlled by operation panel
	Off	Controlled by terminals
	Flashing	Communicating

5.1.3 Display status of operation panel

FV100 operation panel can display the parameters in stopping, operating, editing and function code..

1. Parameters displayed in stopping status

When the drive is in stop status, the operation panel displays the stop status parameter. Pressing the SHIFT key can display different stop status parameters in cycle (Defined by function code b4.05)

2. Parameters displayed in operation status

When the drive receives operating command, it starts running and its panel will display the operation status parameters, the RUN indicator turns on. The status of FWD indicator depends on the operation direction. The unit indicator display the unit of the parameter, by pressing the SHIFT key can display different operation parameters in cycle (Defined by function code b4.05)

3. Parameters displayed in error status

When the drive detects a fault signal, the panel will display the flashing fault code..

Press the SHIFT key to display the stop status parameters and error code in cycle. By pressing the STOP/RST, control terminal or communication command to reset the error. If the error exists still, then the panel keeps displaying the error code.

4. Parameter edit status

When the drive is in stop, operation or error state, press MENU/ESC can enter edit status (If password needed, please refer to description of A0.00),. Edit state displays in 2-level menu, they are: function code group or function code number→function code parameter value. You can press ENTER to enter parameter displayed status. In function parameter displayed status, press ENTER to save the settings, and press MENU to exit the menu.

5.1.4 Panel Operation

Various operations can be completed on the operation panel; the following are 5 common examples. Refer to function code list in chapter 9 for detail function code description.

Example 1: Set parameters

Example: Change the value in A0.03 from 50.00Hz to 30Hz

1. In the stop parameter displaying state, press MENU to enter the first level A0.00;
2. Press ∧ to change A0.00 to A0.03;
3. Press ENTER to enter the second level menu
4. Press the SHIFT to change the marker to the highest bit
5. Press the ∨ to change the 50.00 to 30.00
6. Press the ENTER to confirm above change and back to the fist level menu. Then the parameter is changed successfully.

The above operations are shown in following picture.

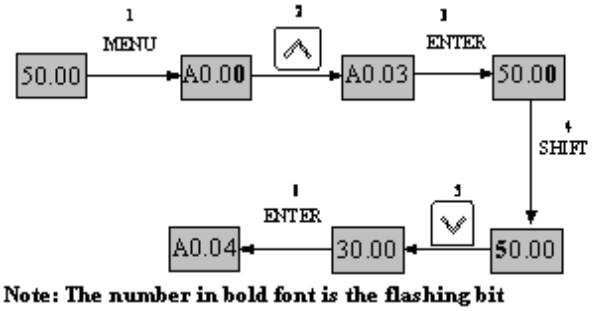

Fig 5-2 Example of setting parameter

In function parameter displaying status, if there is no bit flashing. It means that this function code can not be changed, the possible reason are:

1. This function code is unchangeable parameter. Like actual detected parameter, operation log parameter and so on
2. This parameter can not be changed when running; you need stop the VFD to edit the parameter
3. The parameters are protected. When the b4.02 is 1, function code can not be changed. It is to protect the VFD from wrong operation. If you want to edit this parameter, you need set function code b4.02 to 0.

Example 2: Regulate the setting frequency

Press the ∧ or ∨ to change the setting frequency directly when power on VFD

Note:

When the Operating Speed, Setting Speed, Operating Line Speed, and Setting Line Speed is displayed on the panel. Press ∧ or ∨ is to modify the value of Setting Speed or Setting Line Speed.

Example: changing the setting frequency from 50.00Hz to 40.00Hz.

After the VFD power on (in this example the LED is in voltage display status AI1), Press ∨ to modify the setting frequency (Holding ∨ can speed up the modification) from 50.00Hz to 40.00Hz. So the setting frequency is modified.

The above steps are as the following figure:

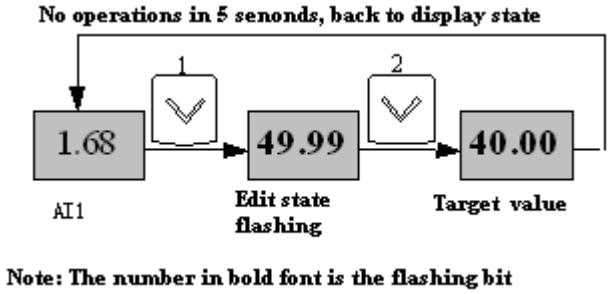

Fig 5-3 Modify the setting frequency

After modification, if there are no operations in 5 seconds, The LED will back to display the voltage, it means to display the status before modification.

Example 3: Set the password

To protect parameters, the VFD provides password protection function. The user needs to input the right password to edit the parameters if the VFD has been set password. For some manufacturer parameters, it also need to input correct manufacturer password.

Note:

Do not try to change the manufacturer parameters. if they are not set properly, the VFD may not work or be damaged.

Function code A0.00 is to set user password. Refer to 6.1 A0 group for more information

Suppose the user's password to be set as 8614, then the VFD is locked, and you can not do any operation to VFD. Then you can follow the following steps to unlock the VFD.

1 when the VFD is locked, press MENU. The LED will display the password verification status: 0000;

2 Change 0000 to 8614;

3 Press ENTER to confirm. Then the LED will display A0.01. So the VFD is unlocked

Note:

After unlock the password, if there is no operation in 5 minutes, VFD will be locked again.

Example 4: Lock the operation panel

The b4.00 is used to lock the operation panel. Refer to 6.1 A0 group for more information

Example: Lock all the keys of the operation panel Under stop parameter displaying status.

1 press MENU to enter A.00

2 Press ∧ to choose the function code b4.00

3 Press ENTER to enter the second level menu

4 Press ∧ to change the hundreds place from 0 to 1

5 Press ENTER to confirm

6 Press MENU to back to the stop parameter displaying status;

7 Press ENTER and hold, then press MENU, so the key board is locked

Example 5: Unlock the keys of the operation panel

When the operation panel is locked, follow the follow operations to unlock it:

Press the MENU and hold , then press the ∨ once, so the key boar is unlocked

Note:

Whatever the setting is in b4.00, after the VFD power on, the operation board is in unlock status.

5.2 Operation mode of VFD

In the follow-up sections, you may encounter the terms describing the control, running and status of drive many times. Please read this section carefully. It will help you to understand and use the functions discussed in the follow chapters correctly.

5.2.1 Control mode of VFD

It defines the physical channels by which drive receives operating commands like START, STOP, JOG and others, there are two channels:

1 Operation panel control: The drive is controlled by RUN, STOP and M keys on the operation panel;

2 Terminal control: The drive is controlled by terminals Xi、Xj and COM (2-wire mode), or by terminal Xki (3-wire mode);

The control modes can be selected by function code A0.04, multi-function input terminal (Function No. 15~17 are selected by A6.00~A6.06).

3 Modbus communication: by using host computer to control the VFD to start or stop.

Note:

Before you change the control mode, make sure that the mode suitable for the application. Wrong selection of control mode may cause damage to equipment or human injury!

5.2.2 Operating Status

There are 3 operating status: stop, motor parameters auto-tuning, and operating.

1. Stop status: After the drive is switched on and initialized, if no operating command is accepted or the stop command is executed, then the drive in stop status.

2. Operating status: The drive enters operating status after it receives the operating command.

3. Motor parameters auto-tuning status: If there is an operating command after b0.11 is set to 1 or 2, the drive then enters motor parameters auto-tuning status, and then enters stopping status after auto-tuning process finishes.

5.2.3 Control mode and operation mode of Kinco VFD

Control mode

FV100 VFD has three control methods, it is set by A0.01:

1. Vector control without PG: it is vector control without speed sensor, need not to install the PG, at the same time it has very high control performance, it can control the speed and torque of motor accurately. It has the characteristics like low frequency with high torque and steady speed with high accuracy. It is often used in the applications that the V/F control mode can not satisfy, but require high robustness.

2. Vector control with PG: The PG is needed, the PG is installed on the shaft of controlled motor to ensure the control performance. It is used in the applications that require high torque response, and much higher accuracy of torque and speed control.

3. V/F control: It is used in the applications that do not require very high performance, such as one VFD controls multiple motors.

Operation mode

Speed control: Control the speed of motor accurately, related function codes in A5 group should be set.

Torque control: Control the torque of motor accurately, related function codes in A5 group should be set.

5.2.4 The channels to set the VFD frequency

FV100 supports 5 kinds of operating modes in speed control mode which can be sequenced according to the priority: Jog>Close loop process operation>PLC operation>Multiple speed operation>simple operation. It is shown as follows:

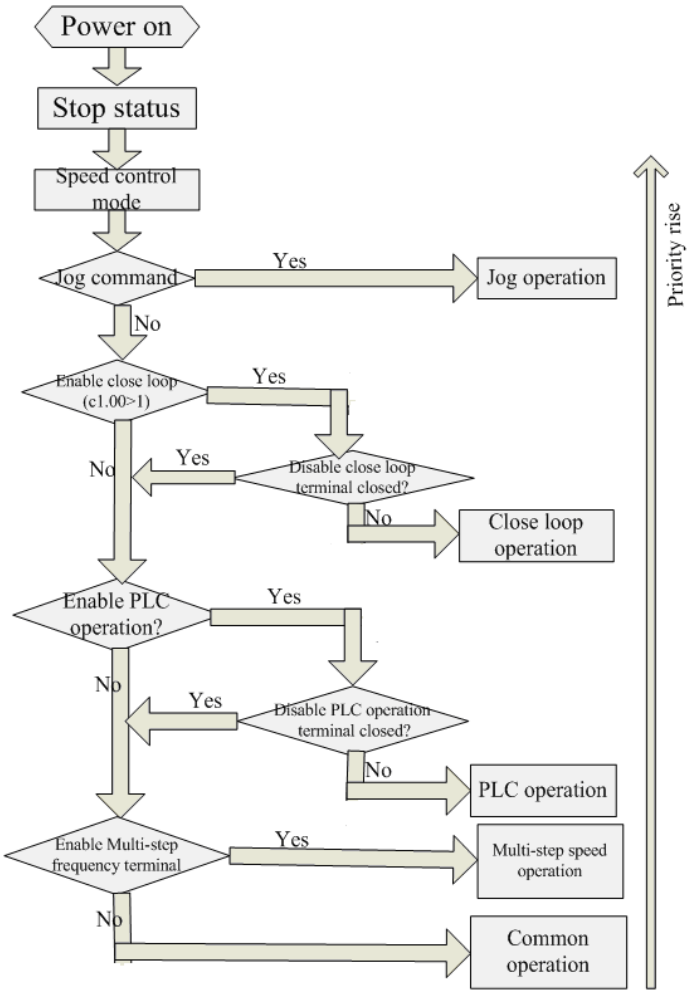

Fig 5-4 Operating mode in speed control mode

The three operating modes provide three basic frequency source.Two of them can use the auxiliary frequency to stacking and adjusting (except Jog mode), the descriptions of each mode are as follows:

1) JOG operation:

When the drive is in STOP state, and receives the JOG command (for example the M key on the panel is pressed), then the drive jogs at the JOG frequency (refer to function code A2.04 and A2.05)

2) Close-loop process operation:

If the close-loop operating function is enabled (C1.00=1), the drive will select the close-loop operation mode, that is, it will perform closed-loop regulation according to the given and feedback value (refer to function code C1 group). This mode can be deactivated by the multi-function terminals, and switch to the lower priority mode.

3) PLC operation

This function is customized, description is omitted.

4) Multi-step (MS) speed operation:

Select Multiple frequency 1～15（C0.00～C0.14）to start Multiple speed operation by the ON/OFF combinations of the multi-function terminals (No.27, 28, 29 and 30 function). If all the terminals are “OFF”,it is in simple operation.

Note:

About the frequency setting channel under speed mode, please refer to the chapter 6 for detail information

5.3 Power on the Drive for the first time

5.3.1 Checking before power on

Please wire the drive correctly according to chapter 4

5.3.2 Operations when start up the first time

After checking the wiring and AC supply, switch on the circuit breaker of the drive to supply AC power to it. The drive’s panel will display “8.8.8.8.” at first, and then the contactor closes. If the LED displays the setting frequency,that is to say the initialization of the drive is completed.

Procedures of first-time start-up are as follows:

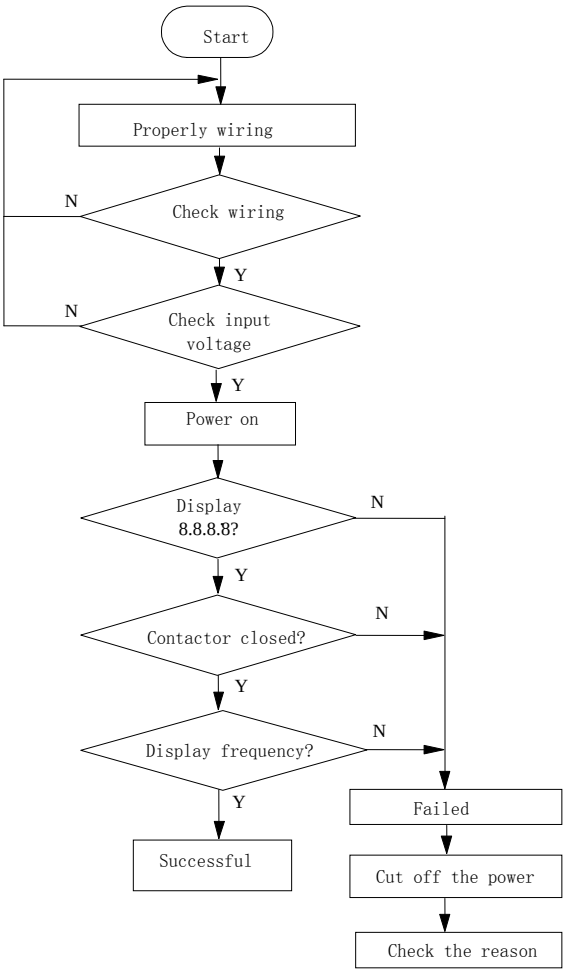

Fig.5-5 Procedures of first-time start-up

Chapter 6 Parameter Introductions

Note:

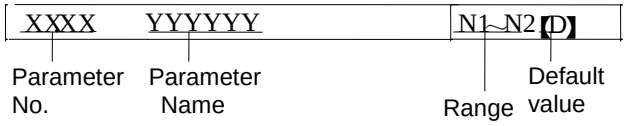

6.1 Group A0

A0.00 User password	00000～65535 【00000】

This function is used to prevent the irrelevant personnel from inquiring and changing the parameter as to protect the safety of the VFD parameters.

0000: No password protection.

Set password:

Input four digits as user password, and press ENTER key for confirmation. After 5 minutes without any other operation,the password will be effective automatically.

Change password:

Press MENU key to enter into the password verification status. Input correct password, and it enters parameter editing status. Select A0.00 (parameter A0.00 displayed as 00000).Input new password and press ENTER key for confirmation. After 5 minutes without any other operation,the password will be effective automatically.

Note:

Please safekeeping the user password.

A0.01 Control mode	0～2【2】

0: Vector control without PG (Open loop vector control)

It is a vector control mode without speed sensor feedback.It is applicable to most applications.

1: Vector control with PG (Closed loop vector control)

It is a vector control with speed sensor feedback.It is applicable to applications with high accuracy requirement of speed control precision,torque control and simple servo control.

2:V/F control

It is used to make the voltage and frequency in a constant ratio. It is applicable to most application, especially for the application of one drive to drive multiple motors.

A0.02 Main reference frequency selector	0～4【0】

0: Digital setting.

The VFD will regard the value in A0.03 as the initial reference frequency when power on.

It can be adjusted via ▲ and ▼ key on the panel(panel control),or adjusted via setting the function of terminal to be UP/DOWN function(set any two of Xi to be 13 and 14, terminal control)

X1～X7 choose any two of them	13	Frequency ramp up (UP)
	14	Frequency ramp down (DN)

1: Set via AI1 terminal.

The reference frequency is set by analog input via terminal AI1 and the voltage range is -10V~10V. The relationship between voltage and reference frequency can be set in Group A3.

2: Set via AI2 terminal.

The reference frequency is set by analog input via terminal AI2 and the voltage range is -10V~10V. The relationship between voltage and reference frequency can be set in Group A3.

3: Set via AI3 terminal.

The reference frequency is set by analog input via terminal AI3 and the voltage range is -10V~10V. The relationship between voltage and reference frequency can be set in Group A3.

4: Set via X7/DI terminal(PULSE).

Set the reference frequency by the X7 terminal's frequency of pulse input .The relationship between pulse frequency and reference frequency can be set in Group A3.

5: Reserved.

A0.03 Set the operating frequency in digital mode	Range: Lower limit of frequency ~upper limit of frequency【50.00Hz】

When the main reference frequency is set in digital mode(A0.02＝0), this setting of A0.03 is the drive's initial frequency value.

A0.04 Methods of inputting operating commands	0～2【0】

FV100 has two control modes.

0: Panel control:Input operating commands via panel

Start and stop the drive by pressing RUN, STOP and M on the panel.

1: Terminal control: Input operating commands via terminals.

Use external terminals Xi(Set function code A6.00~A6.06 to 1 and 2),M Forward, M Reverse to start and stop the drive.

2:Modbus communication.

A0.05 Set running direction	0～1【0】

This function is active in panel control mode , and inactive in terminal control mode.

0: Forward

1: Reverse

A0.06 Acc time 1	0.0~6000.0s 【6.0s】
A0.07 Dec time 1	0.0~6000.0s 【6.0s】

Default value of Acc/Dec time 1：

2kW or below:6.0S

30kW~45kW:20.0S

45kW or above:30.0S

Acc time is the time taken for the motor to accelerate from 0Hz to the maximum frequency (as set in A0.08).

Dec time is the time taken for the motor to decelerate from maximum frequency (A0.08) to 0Hz.

FV100 series VFD has defined 4 kinds of Acc/Dec time.(Here only Acc/Dec time 1 is defined, and Acc/Dec time 2~4 will be defined in A4.01~A4.06),and the Acc/Dec time 1~4 can be selected via the combination of multiple function input terminals,please refer to A6.00~A6.07.

A0.08 Max. output Frequency	Max{50.00,A0.11 upper limit of frequency}~300.00Hz 【50.00】
A0.09 Max. output Voltage	0～480V【VFD's rating values】
A0.10 Upper limit of frequency	A0.11~A0.08【50.00】
A0.11 Lower limit of frequency	0.00~A0.10【00.00】
A0.12 Basic operating frequency	0.00~300【50.00】

Max output frequency is the highest permissible output frequency of the drive, as shown in Fig. 6-1 as F_{max};

Max output voltage is the highest permissible output voltage of the drive, as shown in Fig. 6-1 as V_{max}

Upper limit of frequency is the highest permissible operating frequency of the user setting, as shown in Fig. 6-1 as $F_{H.}$

Lower limit of frequency is the lowest permissible operating frequency of the user setting,as shown in Fig.6-1 as F_L.

Basic operating frequency is the Min. frequency when the drive outputs the max voltage in V/F mode, as shown in Fig. 6-1 as F_b

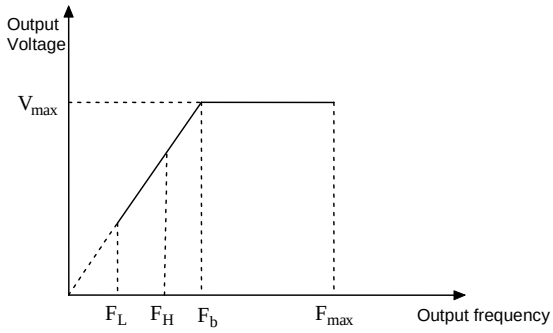

Fig.6-1 Characteristic parameters

Note:

1. Please set Fmax, F_H and F_L carefully according to motor parameters and operating states.

2. F_H and F_L is invalid for JOG mode and auto tuning mode.

3. Besides the upper limit of frequency and lower limit of frequency,the drive is limited by the setting value of frequency of starting,starting frequency of DC braking and hopping frequency.

4. The Max. output frequency,upper limit frequency and lower limit frequency is as shown in Fig.6-1.

5. The upper/lower limit of frequency are used to limit the actual output frequency.If the preset frequency is higher than upper limit of frequency,then it will run in upper limit of frequency.If the preset frequency is lower than the lower limit of frequency,then it will run in lower limit of frequency.If the preset frequency is lower than starting frequency,then it will run in 0Hz.

A0.13 Torque boost of motor 1	0.0～30.0％【0.0％】

In order to compensate the torque drop at low frequency, the drive can boost the voltage so as to boost the torque. This function code is corresponding to maximum output voltage.

If A0.13 is set to 0, auto torque boost is enabled and if A0.13 is set non-zero, manual torque boost is enabled, as shown in Fig. 6-2.

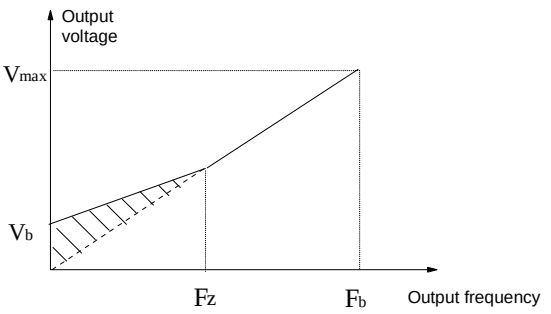

Vb:Manual torque boost Vmax: Max. output voltage
Fz:Cut-off frequency for torque boost Fb:Basic operating frequency

Fig.6-2 Torque boost(shadow area is the boostedvalue)

Note:

1. Wrong parameter setting can cause overheat or over-current protection of the motor.

2. Refer to b1.07 for definition of fz.

6.2 Group A1

A1.00 Starting mode	0、1、2【0】

0.Start from the starting frequency

Start at the preset starting frequency (A1.01) within the holding time of starting frequency (A1.02).

1.Brake first and then start

Brake first(refer to A1.03 and A1.04), and then start in mode 0.

2.Speed tracking

Notes:

Starting mode 1 is suitable for starting the motor that is running forward or reverse with small inertia load when the drive stops. For the motor with big inertial load, it is not recommended to use starting mode 1.

A1.01 Starting frequency	0.00 ～ 60.00Hz 【0.00Hz】
A1.02 Holding time of starting Frequency	0.00～10.00s【0.00s】

Starting frequency is the initial frequency when the drive starts, as shown in Fig. 6-3 as F_S; Holding time of starting frequency is the time during which the drive operates at the starting frequency, as shown in Fig. 6-3 as t_1

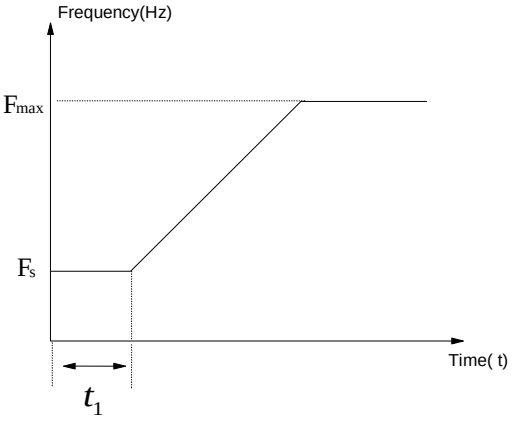

Fig.6-3 Starting frequency and starting time

Note:

Starting frequency is not restricted by the lower limit of frequency.

A1.03 DC injection braking current at start	0.0～100.0%【0.0%】
A1.04 DC injection braking time at start	0.00～30.00s【0.00s】

A1.03 and A1.04 are only active when A1.00 is set to 1 (starting mode 1 is selected), as shown in Fig. 6-4.

DC injection braking current at start is a percentage value of drive's rated current. There is no DC injection braking when the braking time is 0.0s.

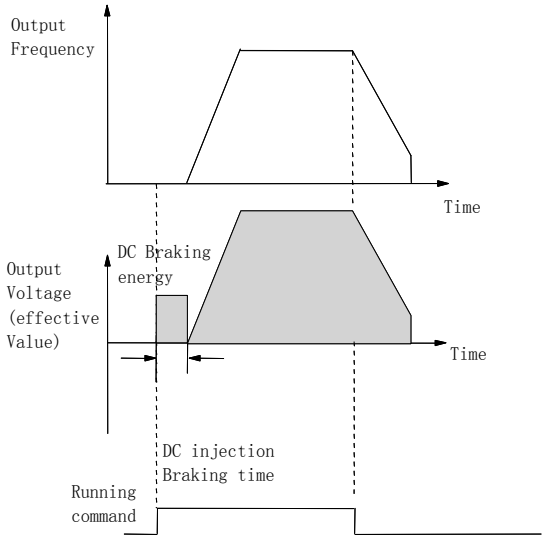

Fig.6-4 Starting mode 1

A1.05 Stopping mode	0、1、2【0】

0: Dec-to-stop

After receiving the stopping command, the drive reduces its output frequency according to the Dec time, and stops when the frequency decreases to 0.

1: Coast-to-stop

After receiving the stopping command, the drive stops outputting power immediately and the motor stops under the effects of mechanical inertia.

2: Dec-to-stop+DC injection braking

After receiving the stop command, the drive reduces its output frequency according to the Dec time and starts DC injection braking when its output frequency reaches the initial frequency of braking process.

Refer to the introductions of A1.06~A1.09 for the functions of DC injection braking.

A1.06 DC injection braking initial frequency at stop	0.00～60.00Hz 【0.00Hz】
A1.07 Injection braking waiting time at stop	0.00～10.00s【0.00s】
A1.08 DC injection braking current at stop	0.0～100.0%【0.0%】
A1.09 DC injection braking time at stop	0.00～30.00s【0.00s】

DC injection braking waiting time at stop: The duration from the time when operating frequency reaches the DC injection braking initial frequency(A1.06) to the time when the DC injection braking is applied.

The drive has no output during the waiting time. By setting waiting time, the current overshoot in the initial stage of braking can be reduced when the drive drives a high power motor.

DC injection braking current at stop is a percentage of drive's rated current. There is no DC injection braking when the braking time is 0.0s.

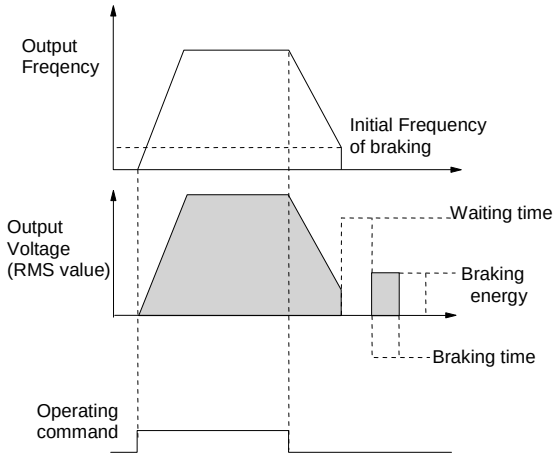

Fig.6-5 Dec-to-stop + DC injection braking

Note:

DC injection braking current at stop(A1.08) is a percentage value of drive's rated current.

A1.10 Restart after power failure	0、1【0】
A1.11 Delay time for restart after power failure	0.0～10.0s【0.0s】

A1.10 and A1.11 decide whether the drive starts automatically and the delay time for restart when the drive is switched off and then switched on in different control modes.

If A1.10 is set to 0, the drive will not run automatically after restarted.

If A1.10 is set to 1, when the drive is powered on after power failure, it will wait certain time defined by A1.11 and then start automatically depending on the current control mode, the drive's status before power failure and the command state when power on. See Table 6-1.

Table 6-1 Restarting conditions

Setting of A1.10	Status before power off	Panel	Serial port	3-wire modes 1 and 2	2-wire modes 1 and 2	
		Without control command				With
0	Stop	0	0	0	0	0
	Run	0	0	0	0	0
1	Stop	0	0	0	0	1
	Run	1	1	1	0	1

Table 6-1 shows the drive's action under different conditions. "0" means the drive enter ready status and "1" means the drive start operation automatically.

Note:

1. A1.10 is only enable in 2-wire mode.
2. If there is a stopping command, the drive will stop first.
3. When the function of restart after power failure is enabled, the drive will start in the way of speed tracking mode after power on if it is not switched off totally (that is, the motor still runs and drive's LED displays "P.OFF"). It will start in the starting mode defined in A1.00 after power on if it is switched off totally (LED turns off).

A1.12 Anti-reverse running function	0、1【0】

0: Disabled

1: Enabled

Note:

This function is effective in all control modes.

A1.13 Delay time of run reverse/ forward	0～3600s【0.0s】

The delay time is the transition time at zero frequency when the drive switching its running direction as shown in Fig. 6-6 as t_1.

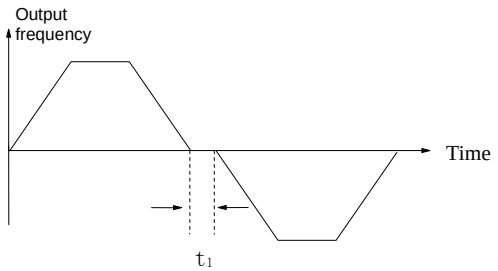

Fig.6-6 Delay time from reverse running to forward running or from forward running to reverse running

A1.14 Switch mode of run reverse/forward	0、1【0】

0:Switch when pass 0Hz

1:Switch when pass starting frequency

A1.15 Detecting frequency of stop	0.00~150.00Hz
A1.16 Action voltage of braking unit	4T: 650～750【720】 2S: 320～380【380】
A1.17 Dynamic braking	0、1【0】

0：Dynamic braking is disabled

1：Dynamic braking is enabled

Note:

This parameter must be set correctly according to the actual conditions, otherwise the control performance may be affected.

A1.18 Ratio of working time of braking unit to drive's total working time	0.0～100.0％【80.0％】

This function is effective for the drive with built-in braking resistor.

Note:

Resistance and power of the braking resistor must be taken into consideration when setting this parameters.

A1.19 Mode select for restart after power failure	0～2【0】

0: Current finding mode

This mode is suitable for speed tracking under the V/F control method, especially suitable for one VFD to drive mutli motors with the speed tracking mode.

1: Vector tracking mode

It is applied to speed tracking for the motor under the vector mode of VFD

2: Depend on the parameter A1.00

6.3 Group A2

A2.00 Auxiliary reference frequency selector	0～5【0】

0:No auxiliary reference frequency

Preset frequency only determined by main reference frequency,auxiliary reference frequency is 0Hz by default.

1:Set by AI1 terminal

The auxiliary frequency is set by AI1 terminal.

2:Set by AI2 terminal

The auxiliary frequency is set by AI2 terminal.

3:Set by AI3 terminal

The auxiliary frequency is set by AI3 terminal.

4:Set by DI (PULSE）terminal

The auxiliary frequency determined by the frequency of input pulse and can be set only by X7 terminal.

5:Set by output frequency of process PID.

A2.01 Main and auxiliary reference frequency calculation	0～3【0】

0:"+"

Preset frequency=Main+auxiliary.

Set preset frequency as 0Hz when the polarity of preset frequency is opposite to main frequency.

1:"—"

Preset frequency=Main-auxiliary.

Set preset frequency as 0Hz when the polarity of preset frequency is opposite to main frequency.

2: MAX

Set the max. absolute value between Main and auxiliary reference frequency as preset frequency.

Set Main reference frequency as preset frequency when the polarity of auxiliary frequency is opposite to main frequency.

3: MIN

Set the min. absolute value between Main and auxiliary reference frequency as preset frequency.

Set preset frequency as 0Hz when the polarity of auxiliary frequency is opposite to main frequency.

A2.02 UP/DN rate	0.01~99.99Hz/s【1.00】

A2.02 is used to define the change rate of reference frequency that is changed by terminal UP/DN or ▲/▼ key.

A2.03 UP/DN regulating control	000~111H【000】

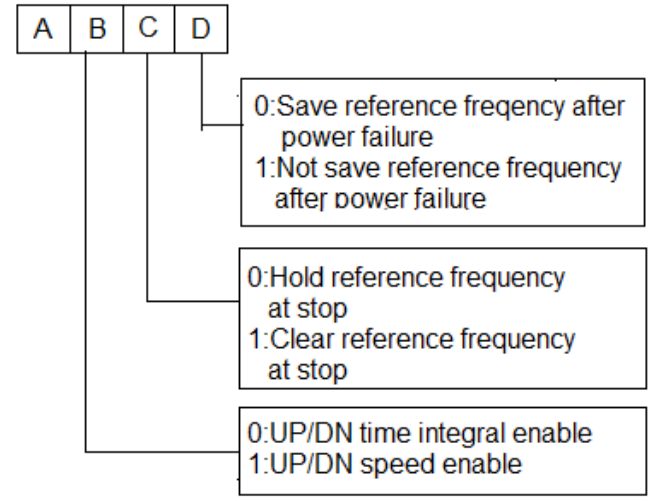

Note:

In this manual,there are many A B C D .Their meanings are as following:

A means the thousand's place of LED display.

B means the hundred's place of LED display.

C means the ten's place of LED display.

D means the unit's place of LED display.

A2.04 Jog operating frequency	0.01 ～ 50.00Hz【5.00Hz】

A2.04 is used to set the jog operating frequency.

Note:

1. Jog operation can be controlled by panel(M key). Press M key to run and release M to stop with stop method (A1.05).

2. Jog operation can also be controlled by terminals. Set jog forward and jog reserve function for DI to make jog operation.

A2.05 Interval of Jog operation	0.0～100.0s【0.0】

Interval of Jog operation (A2.05) is the interval from the time when the last Jog operation command is ended to the time when the next Jog operation command is executed.

The jog command sent during the interval will not be executed. If this command exists, until the end of the interval, will it be executed.

A2.06 Skip frequency 1	0.00～300.0Hz【0.00Hz】
A2.07 Range of skip frequency 1	0.00～30.00Hz【0.00Hz】
A2.08 Skip frequency 2	0.00～300.0Hz【0.00Hz】
A2.09 Range of skip frequency 2	0.00～30.00Hz【0.00Hz】
A2.10 Skip frequency 3	0.00～300.0Hz【0.00Hz】
A2.11 Range of skip frequency 3	0.00～30.00Hz【0.00Hz】

A2.06～A2.11 define the output frequency that will cause resonant with the load, which should be avoided. Therefore, the drive will skip the above frequency as shown in Fig. 6-7. Up to 3 skip frequencies can be set.

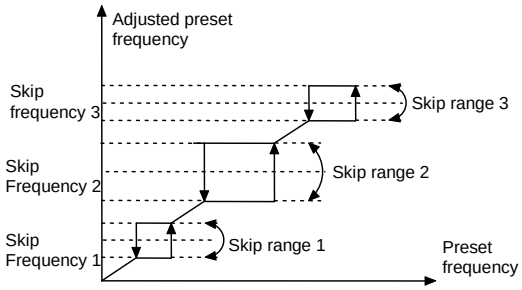

Fig.6-7 Skip frequency and skip range

After setting the parameter of skip frequency, the outputfrequency of VFD will be adjusted automatically to avoid resonant frequency.

6.4 Group A3

A3.00 Reference frequency curve selection	0000～3333H【0000】
A3.01 Max reference of curve 1	A3.03 ～ 110.0%【100.0%】
A3.02 Actual value corresponding to the Max reference of curve 1	0.0% ～ 100.0%【100.0%】
A3.03 Min reference of curve 1	0.0%～A3.01【0.0%】
A3.04 Actual value corresponding to the Min reference of curve 1	0.0% ～ 100.0%【0.0%】
A3.05 Max reference of curve 2	A3.07 ～ 110.0%【100.0%】
A3.06 Actual value corresponding to the Max reference of curve 2	0.0% ～ 100.0%【100.0%】
A3.07 Min reference of curve 2	0.0%～A3. 05【0.0%】
A3.08 Actual value corresponding to the Min reference of curve 2	0.0% ～ 100.0 %【0.0%】
A3.09 Max reference of curve 3	A3.11 ～ 110.0%【100.0%】
A3.10 Actual value corresponding to the Max reference of curve 3	0.0% ～ 100.0%【100.0%】
A3.11 Min reference of curve 3	0.0%～A3. 09【0.0%】
A3.12 Actual value corresponding to the Min reference of curve 3	0.0% ～ 100.0 %【0.0%】
A3.13 Max reference of curve 4	A3.15 ～ 110.0%【100.0%】
A3.14 Actual value corresponding to the Max reference of curve 4	0.0% ～ 100.0%【100.0%】
A3.15 Reference of inflection point 2 of curve 4	A3.17 ～ A3.13【100.0%】
A3.16 Actual value corresponding to the Min reference of inflection point 2 of curve 4	0.0% ～ 100.0%【100.0%】
A3.17 Reference of inflection point 1 of curve 4	A3.19～A3.15【0.0%】
A3.18 Actual value corresponding to the Min reference of inflection point 1 of curve 4	0.0% ～ 100.0%【0.0%】
A3.19 Min reference of curve 4	0.0%～A3. 17【0.0%】
A3.20 Actual value corresponding to the Min reference of curve 4	0.0% ～ 100.0%【0.0%】

Reference frequency signal is filtered and amplified, and then its relationship with the preset frequency is determined by Curve 1,2,3 or 4. Curve 1 is defined by A3.01 ～ A3.04.Curve 2 is defined by A3.05 ～ A3.08.Curve 3 is defined by A3.09～A3.12.Curve 4 is defined by A3.13～A3.20. Take preset frequency as example,positive and negative characteristics are shown in Fig.6-8.In Fig.6-8,the inflection points are set the same as the corresponding relationship of Min. or Max reference.

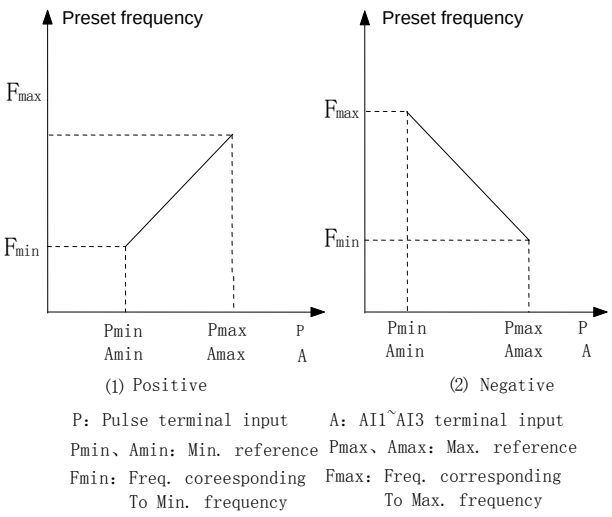

Fig.6-8 Freq. corresponding to Min. frequency

Analog input value (A) is a percentage without unit, and 100% corresponds to 0V or 20mA. Pulse frequency (P) is also a percentage without unit, and 100% corresponds to the Max pulse frequency defined by A6.10.

The time constant of the filter used by the reference selector is defined in Group A6.

A3.00 is used to select the analog input curve and pulse input curve, as show in Fig.6-9.

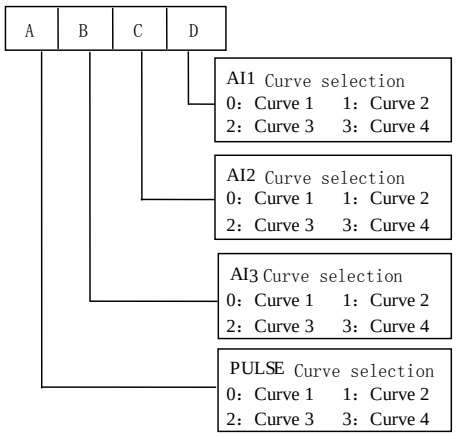

Fig.6-9 Frequency curve selection

For example, the requirements are:

1. Use the pulse signal input via terminal to set the reference frequency;

2. Range of input signal frequency:1kHz~20kHz;

3. 1kHz input signal corresponds to 50Hz reference frequency, and 8kHz input signal corresponds to 10Hz reference frequency, 12kHz input signal corresponds to 40Hz reference frequency,20kHz input signal corresponds to 5Hz reference frequency.

According to the above requirements, the parameter settings are:

1）A0.02＝4，select pulse input to set the reference frequency.

3）A3.00＝3000，select curve 4.

4）A6.10＝20.0kHz，set the Max. input pulse frequency to 20kHz.

5）A3.13＝20÷20×100％＝100.0％,the maximum reference of curve 4 is actually the percentage of 20kHz to 20kHz(A6.10).

6）A3.14＝5.00Hz÷A0.08*100％, set the percentage of frequency that corresponds to the Max. reference (20kHz pulse signal).

7）A3.15＝12÷20×100％＝60.0％，the reference of inflection 2 of curve 4 is actually the percentage of 12kHz to 20kHz(A6.10).

8）A3.16＝40.00Hz÷A0.08*100％，set the percentage of frequency that corresponds to the reference of inflection 2 of curve 4 (12kHz pulse signal).

9）A3.17＝8÷20×100％＝40.0％，the reference of inflection 1 of curve 4 is actually the percentage of 8kHz to 20kHz(A6.10).

10）A3.18＝10.00Hz÷A0.08*100％，set the percentage of frequency that corresponds to the reference of inflection 1 of curve 4 (8kHz).

11）A3.19＝1÷20×100％＝5.0％，the Min. reference of curve 4 is actually the percentage of 1kHz to 20kHz(A6.10).

12）A3.20＝50.00Hz÷A0.08*100％，set the percentage of frequency that corresponds to the Min. reference (1kHz pulse signal).

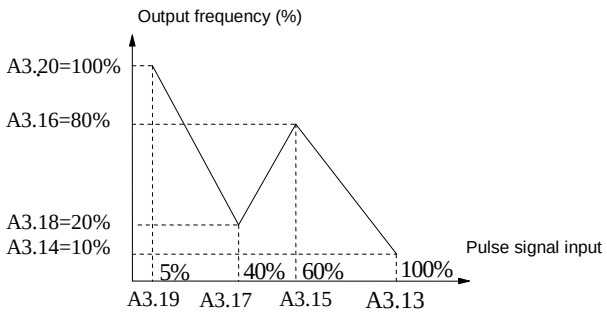

Fig.6-10 Pulse signal input 1

If there is no setting of inflection point in the 3rd requirement,means to change the requirement as 1kHz input signal corresponds to 50Hz reference frequency, and 20kHz input signal corresponds to 5Hz reference frequency.Then we can set the inflection point 1 the same as Min. reference(A3.17＝A3.19，A3.18＝A3.20) and inflection point 2 the same as Max. reference(A3.13＝A3.15，A3.14＝A3.16).As shown in Fig.6-11.

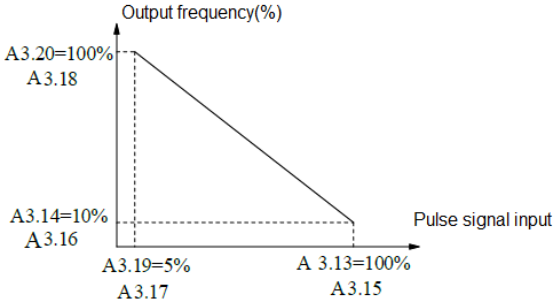

Fig.6-11 Pulse signal input 2

Note:

1. If user set the reference of inflection point 2 of curve 4the same as Max. reference(A3.15=A3.13),then the drive will force A3.16=A3.14,means the setting of inflection point 2 is invalid.If reference of inflection point 2 is the same as reference of inflection point 1(A3.17 ＝ A3.15),then the drive will force A3.18=A3.16,means the setting of inflection point is invalid.If reference of inflection point 1 is the same as Min. reference(A3.19＝A3.17),then the drive will force A3.20=A3.18,means the setting of Min. reference is invalid.The setting of curve 1 is in the same manner.

2. The range of the actual value that corresponds to the reference of curve 1,2,3 and 4 is 0.0％～100.0％,corresponds to torque is 0.0％～300.0％,and corresponds to frequency, its range is 0.0％～100.0％.

A3.21 Characteristic selection of curve	0000～2222H【0000】

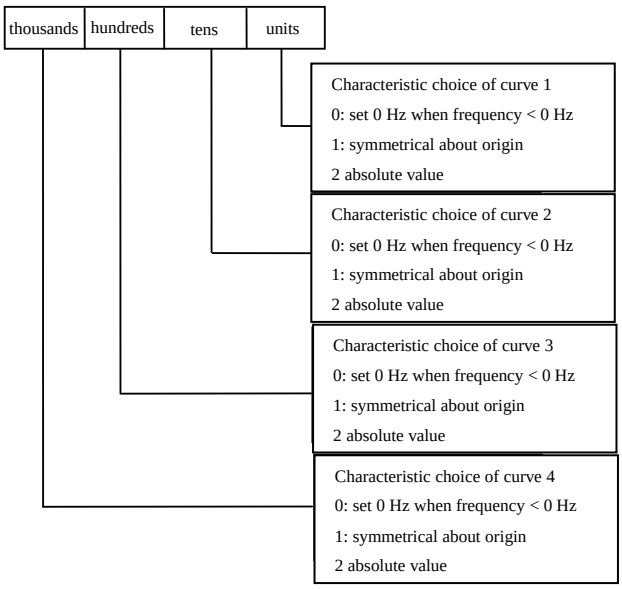

6.5 Group A4

A4.00 Acc/Dec mode	0～1【0】

0: Linear Acc/Dec mode

Output frequency increases or decreases according to a constant rate, as shown in Fig. 6-12.

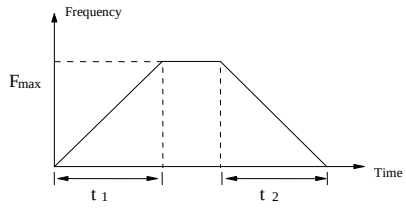

Fig.6-12 Linear Acc/Dec

1: S curve Acc/Dec mode.

The output frequency accelerates and decelerates according to S curve,as shown in Fig.6-13.

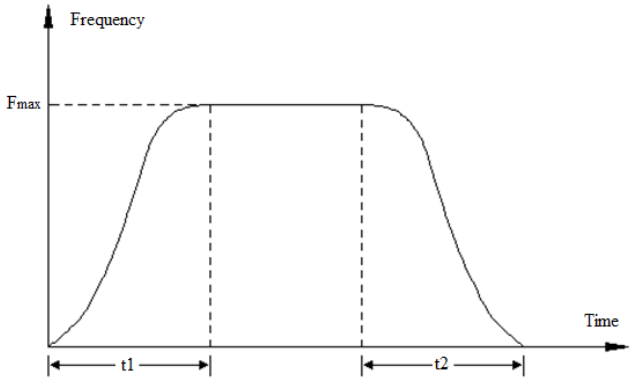

Fig.6-13 S curve Acc/Dec

S curve Acc/Dec mode can smooth acceleration and deceleration,suitable for application like lift,conveyer belt.

A4.01	Acc time 2	0.1～6000.0s【6.0s】
A4.02	Dec time 2	0.1～6000.0s【6.0s】
A4.03	Acc time 3	0.1～6000.0s【6.0s】
A4.04	Dec time 3	0.1～6000.0s【6.0s】
A4.05	Acc time 4	0.1～6000.0s【6.0s】
A4.06	Dec time 4	0.1～6000.0s【6.0s】

Acc time is the time taken for the motor to accelerate from 0Hz to the maximum frequency (as set in A0.08), see t_2 in Fig.6-12. Dec time is the time taken for the motor to decelerate from maximum frequency (A0.08) to 0Hz, see t_2 in Fig.6-12.

CV100 define three kinds of Acc/Dec time,and the drive's Acc/Dec time 1~4 can be selected by different combinations of control terminals, refer to the introductions of A6.00~A6.04 for the definitions of terminals used to select Acc/Dec time.

A4.07 S curve acceleration starting time	10.0%~50.0% (Acc time) A4.07+ A4.08≤90【20.0%】
A4.08 S curve acceleration ending time	10.0%~70.0% (Acc time) A4.07+ A4.08≤90【20.0%】
A4.09 S curve deceleration starting time	10.0%~50.0% (Dec time) A4.09+ A4.10≤90【20.0%】
A4.10 S curve deceleration ending time	10.0%~70.0% (Dec time) A4.09+ A4.10≤90【20.0%】

A4.07~A4.10 is only valid when A4.00 is set as 1 (S curve Acc/Dec mode),and it must make sure A4.07+A4.08≤90%, A4.09+ A4.10≤90%,as shown in Fig.6-14.

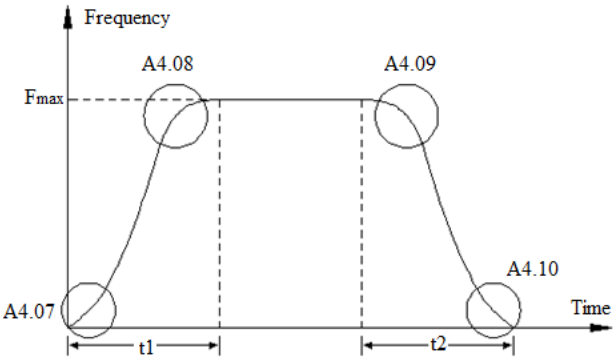

Fig.6-14 Acc/Dec starting time and ending time

6.6 Group A5

A5.00 Speed/Torque control mode	0:Speed control mode 1:Torque control mode
A5.01 ASR1-P	0.1～200.0【20.0】
A5.02 ASR1-I	0.000～10.000s【0.200s】
A5.03 ASR1 output filter	0～8【0】
A5.04 ASR2-P	0.1～200.0【20】
A5.05 ASR2-I	0.000～10.000s【0.200s】
A5.06 ASR2 output filter	0～8【0】
A5.07 ASR1/2 switching frequency	0～100.0%【10.0%】

The parameters A5.00～A5.07 are only valid for vector control mode.

Under vector control mode,it can change the speed response character of vector control through adjusting the proportional gain P and integral time I for speed regulator.

1.The structure of speed regulator (ASR) is shown in Fig.6-13.In the figure, K_P is proportional gain P. T_I is integral time I.

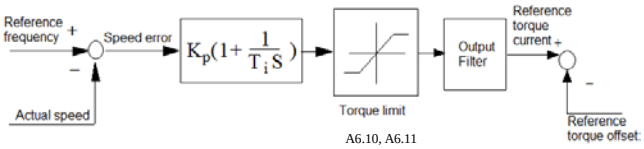

Fig.6-13 Speed regulator

When integral time is set to 0 (A5.02＝0，A5.05＝0),then the integral is invalid and the speed loop is just a proportional regulator.

2. Tuning of proportional gain P and integral time I for speed regulator(ASR).

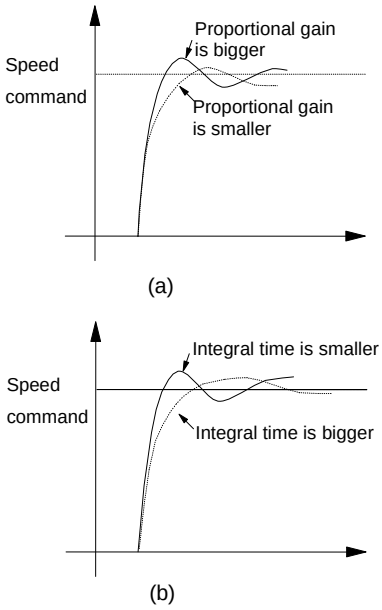

Fig.6-14 The relationship between step response and PI parameters of speed regulator(ASR)

When increasing proportional gain P,it can speed up the system's dynamic response.But if P is too big,the system will become oscillating.

When decreasing integral time I,it can speed up the system's dynamic response.But if I is too small,the system will become overshoot and easily oscillating.

Generally, to adjust proportional gain P firstly.The value of P can be increased as big as possible if the system don't become oscillating.Then adjust integral time to make the system with fast response but small overshoot.The speed step response curve of speed,when set a better value to P and I parameters,is shown in Fig.6-15.(The speed response curve can be observed by analog output terminal AO1 and AO2,please refer to Group A6)

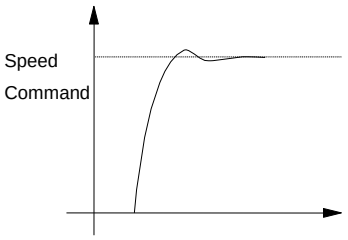

Fig.6-15 The step response with better dynamic performance

Note:

If the PI parameters are set incorrectly,it will cause over-voltage fault when the system is accelerated to high speed quickly(If the system doesn't connect external braking resistor or braking unit),that is because the energy return under the system's regenerative braking when the system is dropping after speed overshoot.It can be avoided by adjusting PI parameters

3. The PI parameters' adjustment for speed regulator(ASR) in the high/low speed running occasion

To set the switching frequency of ASR (A5.07) if the system requires fast response in high and low speed running with load.Generally when the system is running at a low frequency,user can increase proportional gain P and decrease integral time I if user wants to enhance the dynamic response.The sequence for adjusting the parameters of speed regulator is as following:

1）Select a suitable switching frequency(A5.07).

2）Adjust the proportional gain (A5.01) and integral time(A5.02) when running at high speed,ensure the system doesn't become oscillating and the dynamic response is good.

3）Adjust the proportional gain (A5.04) and integral time(A5.05) when running at low speed, ensure the system doesn't become oscillating and the dynamic response is good.

4. Get the reference torque current through a delay filter for the output of speed regulator.A5.03 and A5.06 are the time constant of output filter for ASR1 and ASR2.

A5.08 Forward speed limit in torque control mode	0.0%~+100.0%【100.0%】
A5.09 Reverse speed limit in torque control mode	0.0%~+100.0%【100.0%】
A5.10 Driving torque limit	0.0%~+300.0%【180.0%】
A5.11 Braking torque limit	0.0%~+300.0%【180.0%】

Driving torque limit is the torque limit in motoring condition.

Braking torque limit is the torque limit in generating condition.

In setting value,100% is corresponding to drive's rated torque.

A5.12 Reference torque selector	0~4 【0】

0:Digital torque setting

1:AI1

2:AI2

3:AI3

4:Terminal DI(Pulse) setting

A5.13 Digital torque setting	-300.0%~+300.0%【0%】
A5.14 Switch point from speed to torque	0%~+300.0%【100%】
A5.15 Delay for switch speed and torque	0~1000mS【0】

A5.16 Filter for torque setting	0~65535mS【0】

A5.17 ACR-P	1～5000【1000】
A5.18 ACR-I	0.5～100.0mS【8.0ms】

A5.17 and A5.18 are the parameters for PI regulator of current loop.Increasing P or decreasing I of current loop can speed up the dynamic response of torque.Decreasing P or increasing I can enhance the system's stability.

Note:

For most applications, there is no need to adjust the PI parameters of current loop,so the users are suggested to change these parameters carefully.

6.7 Group A6

A6.00 Multi-function terminal X1	0～41【01】
A6.01 Multi-function terminal X2	0～41【02】
A6.02 Multi-function terminal X3	0～41【06】
A6.03 Multi-function terminal X4	0～41【27】
A6.04 Multi-function terminal X5	0～41【28】
A6.05 Multi-function terminal X6	0～41【29】
A6.06 Multi-function terminal X7	0～41【00】
A6.07: Reserved	

The functions of multi-function input terminal X1~X7 are extensive. You can select functions of X1~X7 according to your application by setting A6.00~FA.06. Refer to Table 6-1.

Note:

Can not set the same function for different terminals. For example, if X1 is set as forward function【01】, then the others terminals can not be set as the same function.

Table 6-1 Multi-function selection

Setting	Function	Setting	Function
0	No function	1	Forward
2	Reverse	3	Forward jog
			operation
4	Reverse jog operation	5	3-wire operation control
6	External RESET signal input	7	External fault signal input
8	External interrupt signal input	9	Drive operation prohibit
10	External stop command	11	DC injection braking command
12	Coast to stop	13	Frequency ramp up (UP)
14	Frequency ramp down (DN)	15	Switch to panel control
16	Switch to terminal control	17	Reserved
18	Main reference frequency via AI1	19	Main reference frequency via AI2
20	Reserved	21	Main reference frequency via DI
22	Auxiliary reference frequency invalid	23	Reserved
24	Reserved	25	Reserved
26	Reserved	27	Preset frequency 1
28	Preset frequency 2	29	Preset frequency 3
30	Preset frequency 4	31	Acc/Dec time 1
32	Acc/Dec time 2	33	Multi-closed loop reference 1
34	Multi-closed loop reference 2	35	Multi-closed loop reference 3
36	Multi-closed loop reference 4	37	Forward prohibit
38	Reverse prohibit	39	Acc/Dec prohibit
40	Process closed loop prohibit	41	Switch speed control and torque control

Setting	Function	Setting	Function
42	Main frequency switch to digital setting	43	PLC pause
44	PLC prohibit	45	PLC stop memory clear
46	Swing input	47	Swing reset

Introductions to functions listed in Table 6-1:

1: Forward.

2: Reverse.

3~4: Forward/reverse jog operation.

They are used jog control of terminal control mode.The jog operation frequency,jog interval and jog Acc/Dec time are defined by A2.04~A2.05,A4.05~A4.06.

5: 3-wire operation control.

They are used in operation control of terminal control mode.Refer to A6.09.

6: External RESET signal input.

The drive can be reset via this terminal when the drive has a fault. The function of this terminal is the same with that of RST on the panel.

7: External fault signal input.

If the setting is 7, the fault signal of external equipment can be input via the terminal, which is convenient for the drive to monitor the external equipment. Once the drive receives the fault signal, it will display “E015”.

8: External interrupt signal input

If the setting is 8, the terminal is used to cut off the output and the drive operates at zero frequency when the terminal is enabled. If the terminal is disabled, the drive will start on automatically and continue the operation.

9: Drive operation prohibit.

If terminal is enabled, the drive that is operating will coast to stop and is prohibited to restart. This function is mainly used in application with requirements of safety protection.

10: External stop command.

This stopping command is active in all control modes.When terminal 35 is enabled, the drive will stop in the mode defined in A1.05.

11: DC injection braking command.

If the setting is 11, the terminal can be used to perform DC injection braking to the motor that is running so as to realize the emergent stop and accurate location of the motor. Initial braking frequency, braking delay time and braking current are defined by A1.06~A1.08. Braking time is the greater value between A1.09 and the effective continuous time defined by this control terminal.

12: Coast to stop.

If the setting is 12, the function of the terminal is the same with that defined by A1.05. It is convenient for remote control.

13~14: Frequency ramp UP/DN.

If the setting is 13~14, the terminal can be used to increase or decrease frequency. Its function is the same with ▲ and ▼ keys on the panel, which enables remote control. This terminal is enabled when A0.02=0 and A0.04=1. Increase or decrease rate is determined by A2.02 and A2.03.

15: Switch to panel control.

It is used to set the control mode as panel control.

16:Switch to terminal control

It is used to set the control mode as terminal control.

17: Reserved.

18: Main reference frequency via AI1

19: Main reference frequency via AI2

20: Main reference frequency via AI3

21: Main reference frequency via DI

Main reference frequency will switch to set via AI1,AI2,AI3 or DI when the terminal activate.

22: Auxiliary reference frequency invalid.

Auxiliary reference frequency is invalid when the terminal activate.

23~26: Reserved.

27~30: Preset frequency selection.

Up to 15 speed references can be set through different

ON/OFF combinations of these terminals K4,K3,K2 and K1. Refer to Group C0 to set the value of Preset frequency.

Table 6-2 On/Off combinations of terminals

K4	K3	K2	K1	Frequency setting
OFF	OFF	OFF	OFF	Common operating frequency
OFF	OFF	OFF	ON	Preset frequency1
OFF	OFF	ON	OFF	Preset frequency 2
OFF	OFF	ON	ON	Preset frequency 3
OFF	ON	OFF	OFF	Preset frequency 4
OFF	ON	OFF	ON	Preset frequency 5
OFF	ON	ON	OFF	Preset frequency 6
OFF	ON	ON	ON	Preset frequency 7
ON	OFF	OFF	OFF	Preset frequency 8
ON	OFF	OFF	ON	Preset frequency 9
ON	OFF	ON	OFF	Preset frequency 10
ON	OFF	ON	ON	Preset frequency 11
ON	ON	OFF	OFF	Preset frequency 12
ON	ON	OFF	ON	Preset frequency 13
ON	ON	ON	OFF	Preset frequency 14
ON	ON	ON	ON	Preset frequency 15

The frequency references will be used in multiple speed operation . Following is an example:

Definitions of terminals X1, X2,X3and X4 as following:

After setting A6.00 to 27, A6.01 to 28 and A6.03 to 30, terminals X1~X4 can be used in multiple speed operation, as shown in Fig. 6-16.

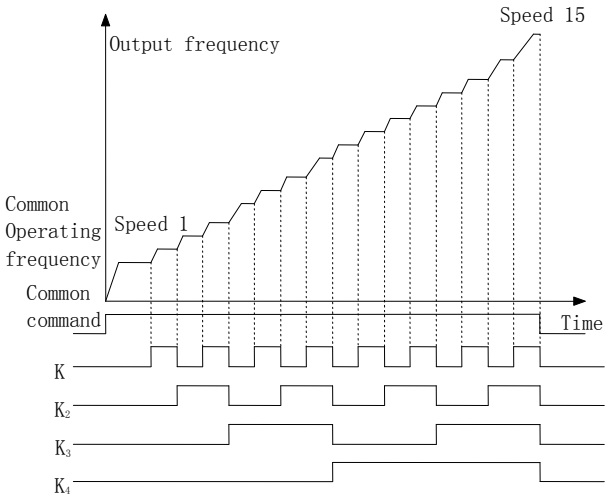

Fig.6-16 Multi-step speed operation

31～32: Acc/Dec time selection

Table 6-3 Acc/Dec time selection

Terminal 2	Terminal1	Acc/Dec time selection
OFF	OFF	Acc time 1/Dec time 1
OFF	ON	Acc time 2/Dec time 2
ON	OFF	Acc time 3/Dec time 3
ON	ON	Acc time 4/Dec time 4

Through the On/Off combinations of terminal 1and 2, Acc/Dec time 1~4 can be selected.

33～36: Multi-voltage setting in closed loop

Table 6-4 On/Off combinations for voltage selection

K4	K3	K2	K1	Voltage setting
OFF	OFF	OFF	OFF	Determined by C1.01
OFF	OFF	OFF	ON	Preset close-loop reference 1
OFF	OFF	ON	OFF	Preset close-loop reference 2
OFF	OFF	ON	ON	Preset close-loop reference 3
OFF	ON	OFF	OFF	Preset close-loop reference 4
OFF	ON	OFF	ON	Preset close-loop reference 5
OFF	ON	ON	OFF	Preset close-loop reference 6
OFF	ON	ON	ON	Preset close-loop reference 7
ON	OFF	OFF	OFF	Preset close-loop reference 8
ON	OFF	OFF	ON	Preset close-loop reference 9
ON	OFF	ON	OFF	Preset close-loop reference 10
ON	OFF	ON	ON	Preset close-loop reference 11
ON	ON	OFF	OFF	Preset close-loop reference 12
ON	ON	OFF	ON	Preset close-loop reference 13
ON	ON	ON	OFF	Preset close-loop reference 14
ON	ON	ON	ON	Preset close-loop reference 15

Refer to C1.19~C1.33 to set the value of Preset close-loop reference.

37: Forward prohibit.

The drive will coast to stop if the terminal activate when running forward.If the terminal activate before the drive run forward,the drive will run in 0Hz.

38:Reverse prohibit.

The drive will coast to stop if the terminal activate when running reverse.If the terminal activate before the drive run reverse,the drive will run in 0Hz.

39: Acc/Dec prohibit

If the setting is 15, the terminal can make the motor operate at present speed without being influenced by external signal (except stopping command).

40: Process closed loop prohibit

Forbid process closed loop control.

41: Switch speed control and torque control

Switch speed control mode and torque control mode.

42: Main frequency switch to digital setting

Switch the main frequency selector to digital setting.

43:PLC pause

Pause PLC function control.

44: PLC prohibit

Forbid PLC function running.

45:PLC stop memory clear

Clear the memory which store the steps before PLC function stop.

46:Swing input

When this signal is valid,the drive will start swing operation.This function is only valid when the swing operation mode is set as 1.

47:Swing reset

When this signal is valid,it will clear swing status information.When this signal is invalid,the drive will start swing function again.

A6.08 Terminal filter	0～500ms【10ms】

A6.08 is used to set the time of filter for input terminals.When the state of input terminals change, it must keep the state for the filter time,or the new state won’t be valid.

A6.09 Terminal control mode selection	0～3【0】

This parameter defines four operating modes controlled by external terminals.

0: 2-wire operating mode 1

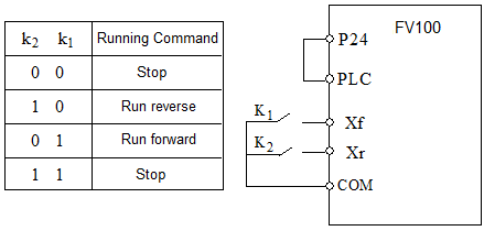

Fig.6-17 2-wire operating mode 1

1: 2-wire operating mode 2

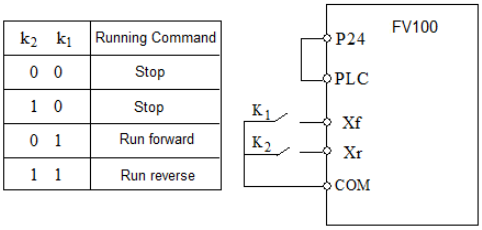

Fig.6-18 2-wire operating mode 2

2: 3-wire operating mode 1

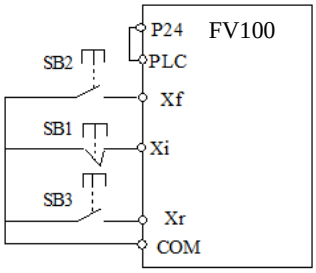

Fig.6-19 3-wire operating mode 1

Where:

SB1: Stop button

SB2: Run forward button

SB3: Run reverse button

Terminal Xi is the multi-function input terminal of X1~X7.At this time, the function of this terminal should be defined as No.5 function of “3-wire operation”.

3: 3-wire operation mode 2

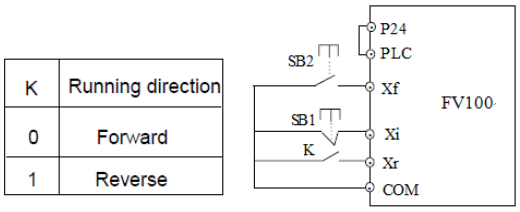

Fig.6-20 3-wire operation mode 2

Where:

SB1: Stop button

SB2: Run button

Terminal Xf, Xr, Xi is the multi-function input terminal of X1~X7. At this time, the function of this terminal should be defined as No.1 (Forward) No.2 (Reverse) No.5 function (3-wire operation). First, set the key SB1 in normal close status to make this function(3-wire operation mode 2) enable. Second, press the key SB2 once to give Xf a pulse signal (⎍) then the running direction is forward, at this moment, the key K is in normal open status. Last but not least, make the key K in normal close status, then the running direction will be reverse. Just need to switch the status of key K, will the direction be changed.

A6.10 Max. frequency of input pulse	0.1～100.0kHz【10kHz】

This parameter is used to set the max. frequency of input pulse when X7 is defined as pulse input.

A6.11 Center point of pulse setting selection	0～2【0】

This parameter defines different modes of center point when X7 is defined as pulse input.

0: No center point.As shown in Fig.6-21.

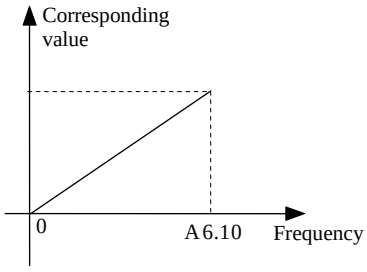

Fig.6-21 No center point mode

All the corresponding values of pulse input frequency are positive.

1: Center point mode 1.

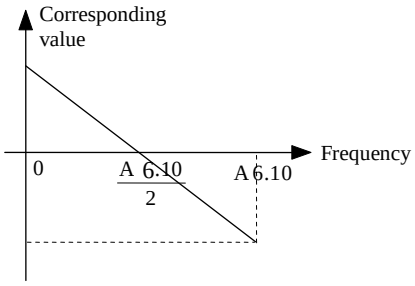

Fig.6-22 Center point mode 1

There is a center point in pulse input.The value of the center point is a half of max.frequency of input pulse(A6.10).The corresponding value is positive when the input pulse frequency is less than center point.

2: Center point mode 2.

There is a center point in pulse input.The value of the center point is a half of max.frequency of input pulse(A6.10).The corresponding value is positive when the input pulse frequency is greater than center point.

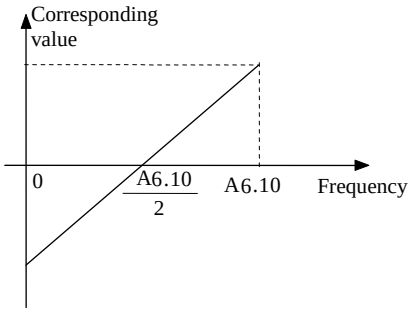

Fig.6-23 Center point mode 2

A6.12 Filter of pulse input	0.00～10.00s【0.05s】

This parameter defines the filter time of pulse input.The bigger of the filter time,the slower of the frequency changing rate of pulse input.

A6.13 Input terminal's positive and negative logic	00～FFH【00H】

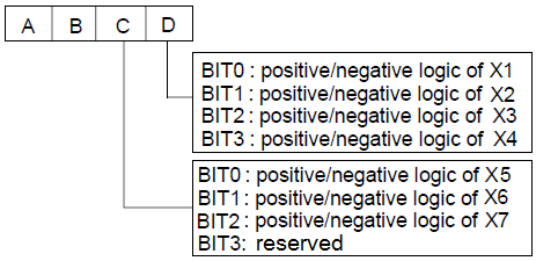

Fig.6-24 terminal's positive and negative logic

A6.13 defines the input terminal's positive and negative logic

Positive logic: Terminal Xi is enabled if it is connected to the common terminal;

Negative logic: Terminal Xi is disabled if it is connected to the common terminal;

If the bit is set at 0, it means positive logic; if set at 1, it means negative logic.

For example:

If X1~X4 are required to be positive logic,and X5~X7 are required to be negative logic,then the settings are as following:

Logic status of X4~X1 is 0000, and the hex value is 0.

Logic status of X7~X5 is 111, and the hex value is 7.

So A6.13 should be set as 70. Refer to Table 6-5.

Table 6-5 Conversion of binary code and hex value

Binary settings				Hex value (Displaying of LED)
BIT3	BIT2	BIT1	BIT0	
0	0	0	0	0
0	0	0	1	1
0	0	1	0	2
0	0	1	1	3
0	1	0	0	4
0	1	0	1	5
0	1	1	0	6
0	1	1	1	7
1	0	0	0	8
1	0	0	1	9
1	0	1	0	A
1	0	1	1	B
1	1	0	0	C
1	1	0	1	D
1	1	1	0	E
1	1	1	1	F

Note:

Factory setting of all the terminals is positive logic.

A6.14 Bi-direction open-collector output terminal Y1	0～20【0】
A6.15 Reserved	
A6.16 Output functions of relay R1	0～20【16】
A6.17 Reserved	

Refer to chapter 3 for the output characteristics of Y1 that are bi-direction open-collector output terminal and the relay's output terminal. Table 6-6 shows the functions of the above 2 terminals. One function can be selected repeatedly.

Table 6-6 Functions of output terminals

Setting	Function	Setting	Function
0	Drive running signal (RUN)	1	Frequency arriving signal (FAR)
2	Frequency detection threshold (FDT1)	3	Frequency detection threshold (FDT2)
4	Reserved	5	Low voltage lock-up signal (LU)
6	External stopping command (EXT)	7	High limit of frequency (FHL)
8	Lower limit of frequency (FLL)	9	Zero-speed running
10	Reserved	11	Reserved
12	PLC running step finish signal	13	PLC running cycle finish signal
14	Swing limit	15	Drive ready (RDY)
16	Drive fails	17	Reserved
18	Reserved	19	Torque limiting
20	Drive running forward/reverse		

The instructions of the functions in Table 6-6 as following:

0: Drive running signal (RUN)

When the drive is in operating status, there will be running indication signal output by this terminal.

1: Frequency arriving signal (FAR)

See A6.19.

2: Frequency detection threshold (FDT1)

See A6.20~A6.21.

3: Frequency detection threshold (FDT2)

See A6.22~A6.23.

4: Reserved.

5: Low voltage lock-up signal (LU)

The terminal outputs the indicating signal if the DC bus voltage is lower than the low voltage limit, and the LED displays "P.oFF".

6: External stopping command (EXT)

The terminal outputs the indicating signal if the drive outputs tripping signal caused by external fault (E015).

7: High limit of frequency (FHL)

The terminal outputs the indicating signal if the preset frequency is higher than upper limit of frequency and the operating frequency reaches the upper limit of frequency.

8: Lower limit of frequency (FLL)

The terminal outputs the indicating signal if the preset frequency is higher than lower limit of frequency and the operating frequency reaches the lower limit of frequency.

9: Zero-speed running

The terminal outputs the indicating signal if the drive's output frequency is 0 and the drive is in operating status.

10~11:Reserved.

12: PLC running step finish signal

In PLC running mode,when it finishes the current step,it will output signal(Single pulse with width 500ms).

13: PLC running cycle finish signal

In PLC running mode,when it finishes one cycle, it will output signal(Single pulse with width 500ms).

14. Swing limit

In Swing mode,if the swing frequency is higher than upper limit or lower than lower limit,then it will output a signal.

15: drive ready (RDY)

If RDY signal is output, it means the drive has no fault, its DC bus voltage is normal and it can receive starting command.

16: Drive fails

The terminal outputs the indicating signal if the drive has faults.

17~18:Reserved.

19:Torque limiting

The terminal outputs the indicating signal if the torque reach drive torque limit or brake torque limit.

20:Drive running forward/reverse

The terminal outputs the indicating signal according to the drive's current running direction.

A6.18 Output terminal's positive and negative logic	00～1FH【00H】

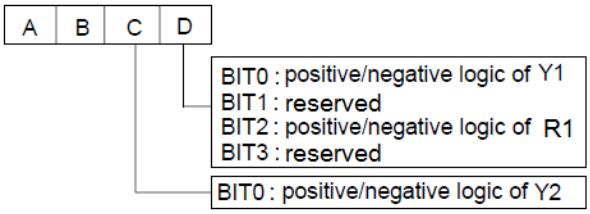

Fig.6-25 Output terminal's positive and negative logic

A6.18 defines the output terminal's positive and negative logic .

Positive logic: Terminal is enabled if it is connected to the common terminal;

Negative logic: Terminal is disabled if it is connected to the common terminal;

If the bit is set at 0, it means positive logic; if set at 1, it means negative logic.

A6.19 Frequency arriving signal (FAR)	0.00～300.0Hz【2.50Hz】

As shown in Fig. 6-26, if the drive's output frequency is within the detecting range of preset frequency, a pulse signal will be output.

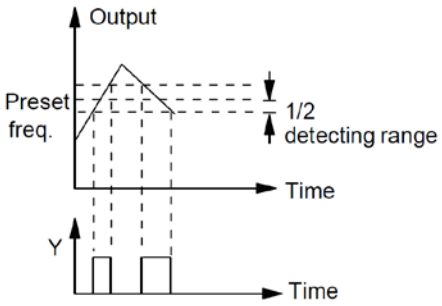

Fig.6-26 Frequency arriving signal

A6.20 FDT1 level	0.00～300.0Hz【50.00Hz】
A6.21 FDT1 lag	0.00～300.0Hz【1.00Hz】
A6.22 FDT2 level	0.00～300.0Hz【25.00Hz】
A6.23 FDT2 lag	0.00～300.0Hz【1.00Hz】

A6.20～A6.21 is a complement to the No.2 function in Table 6-6. A6.22～A6.23 is a complement to the No.3 function in Table 6-6. Their functions are the same.Take A6.20～A6.21 for example:

When the drive's output frequency reaches a certain preset frequency (FDT1 level), it outputs an indicating signal until its output frequency drops below a certain frequency of FDT1 level (FDT1 level-FDT1 lag), as shown in Fig. 6-27.

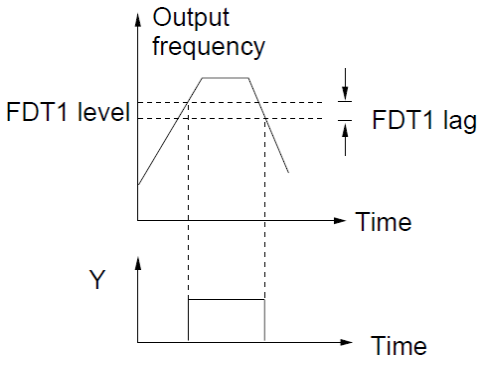

Fig.6-27 FDT level

A6.24 Virtual terminal setting	0～007FH【00h】

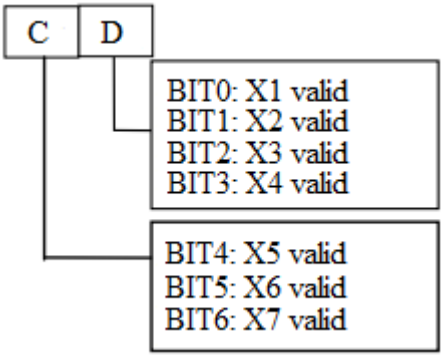

A6.25 Y2 terminal output	0～100【000】

0~50: Y2 is used as Y terminal output,its function is the same as Table 6-6.

51~88: Y2 function.

Pulse frequency frequency of Y2:0～Max. pulse output frequency(Defined in A6.26).

The linear relationship between the displaying range and the output values of Y2 is shown as Table 6-7.

Table 6-7 Displaying range of Y2 terminal

Setting	Function	Range
51	Output frequency	0 ～ Max. output frequency
52	Preset frequency	0 ～ Max. output frequency
53	Preset frequency (After Acc/Dec)	0 ～ Max. output frequency
54	Motor speed	0～Max. speed
55	Output current Iei	0～2 times of motor's rated current
56	Output current Iem	0～3 times of motor's rated current
57	Output torque	0～3 times of motor's rated torque
58	Output voltage	0～1.2 times of drive's rated voltage
60	Bus voltage	0～800V
61	AI1 Voltage	－10V～10V
62	AI2 Voltage	－10V～10V
63	AI3 Voltage	－10V～10V
64	DI pulse input	0～100KHz
65	Percentage of host computer	0~4095
66~88	Reserved	Reserved

A6.26 Max. output pulse frequency	0.1～100kHz【10.0】

This parameter defines the permissible maximum pulse frequency of Y2.

A6.27 Center point of pulse output selection	0～2【0】

This parameter defines different center point mode of Y2 pulse output.

0：No center point. Shown as following figure:

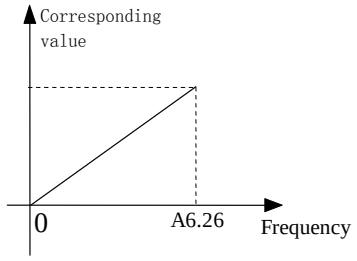

Fig.6-28 No center point mode

All the corresponding value of pulse output Frequency are positive.

1:Center point mode 1.Shown as following figure.

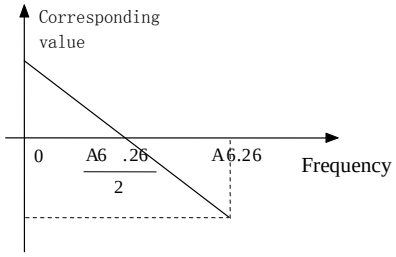

Fig.6-29 Center point mode 1

There is a center point in pulse output.The value of the cent point is a half of max. output pulse frequency (A6.26).The corresponding value is positive when the output pulse frequency is less than center point.

2: Center point mode 2

There is a center point in pulse output.The value of the center point is a half of max. output pulse frequency (A6.26).The corresponding value is positive when the input pulse frequency is greater than center point.

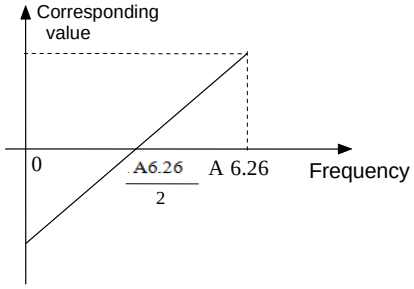

Fig.6-30 Center point mode 2

A6.28 Functions of terminal AO1	0～36【0】
A6.29 Functions of terminal AO2	0～36【0】

Refer to section 4.2 for the output characteristics of AO1 and AO2.

The relationship between the displaying range and the output values of AO1 and AO2 is shown as Table 6-8

Table 6-8 Displaying range of Analog output

Setting	Function	Range
0	No function	No function
1	Output frequency	0～Max. output frequency
2	Preset frequency	0～Max. output frequency
3	Preset frequency （After Acc/Dec）	0～Max. output frequency
4	Motor speed	0～Max. speed
5	Output current	0～2 times of drive's rated current
6	Output current	0～2 times of motor's rated current
7	Output torque	0～3 times of motor's rated torque
8	Output torque current	0 ～ 3 times of motor's rated torque
9	Output voltage	0～1.2 times of drive's rated voltage
10	Bus voltage	0～800V
11	AI1	0～Max. analog input
12	AI2	0～Max. analog input
13	AI3	0～10V
14	DI pulse input	0～Max. pulse input
Others	Reserved	Reserved

Note:

The external resistor is advised to be lower than 400Ω when AO output current signal.

A6.30 Gain of AO1	0.0～200.0％【100.0%】
A6.31 Zero offset calibration of AO1	－100.0～100.0%【0.0%】

For the analog output AO1 and AO2,adjust the gain if user need to change the display range or calibrate the gauge outfit error.

100% of zero offset of analog output is corresponding to the maximum output (10V or 20mA).Take output voltage for example,the relationship between the value before adjustment and with after adjustment is as following:

AO output value ＝ (Gain of AO)×(value before adjustment)＋(Zero offset calibration)×10V

The relationship curve between analog output and gain and between analog output and zero offset calibration are as Fig.6-31 and Fig.6-32.

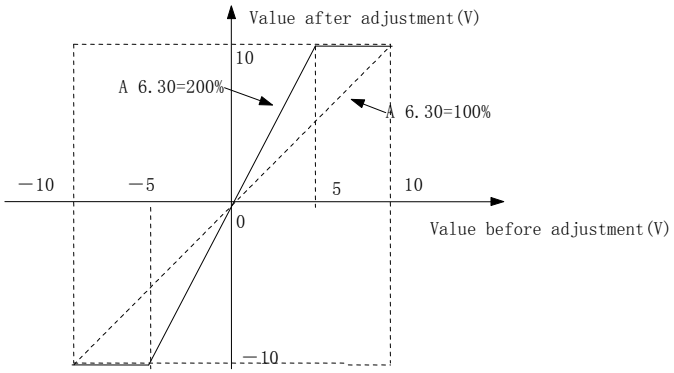

Fig.6-31 Relationship curve between analog output and gain

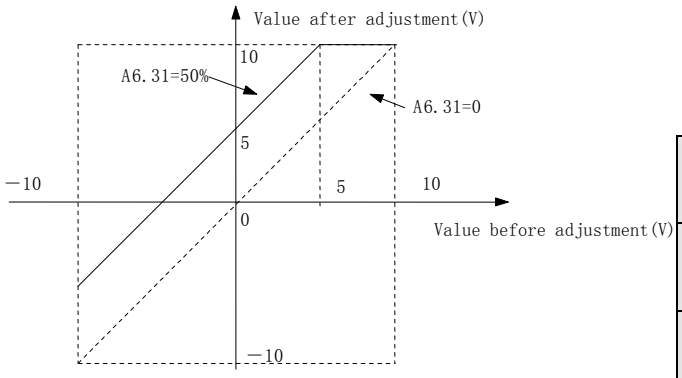

Fig.6-32 The relationship curve between analog output and zero offset

Note:

The parameters of gain and zero offset calibration affect the

analog output all the time when it is changing.

A6.32 Gain of AO2	0.0～200.0%【100.0%】
A6.33 Zero offset calibration of AO2	－100.0～100.0%【0.0%】

The functions of analog output AO2 are totally the same as AO1.

A6.34 AI1 filter	0.01～10.00s【0.05】
A6.35 AI2 filter	0.01～10.00s【0.05】
A6.36 AI3 filter	0.01～10.00s【0.05】

A6.34～A6.36 define the time constant of AI filter.The longer the filter time,the stronger the anti-interference ability,but the response will become slower.The shorter the filter time,the faster the response,but the anti-interference ability will become weaker.

A6.37 Analog input zero offset calibration	0~1【0】

0: Disable

1: Enable

Note:

Before the analog input zero offset calibration is enable,it needs to make sure there is no wiring in analog input terminal or the analog input terminal is connected to GND.

A6.38 AI1 gain	0.00～200.00%【110.00%】
A6.39 AI2 gain	0.00～200.00%【110.00%】
A6.40 AI3 gain	0.00～200.00%【110.00%】

AI gain is used for the relationship between analog input and internal value.When increasing the AI gain,then the corresponding internal value will be increased.When decreasing the AI gain,then the corresponding internal value will be decreased. Take AI1 for example, if the input AI1 is 10V but detecting value of AI1 is 8V, increasing the AI1 gain can make it to 10V.

6.8 Group A7

A7.00 PG type	0～3【0】

This parameter defines the type of encoder.

0：ABZ incremental type

1：UVW incremental type

2～3：Reserved.

A7.01 Number of pulses per revolution of PG	0～10000【2048】

A7.01 is used to set the number of pulses per revolution of PG(PPR).

Note:

A7.01 must be set correctly when the drive run with speed sensor,or the motor can’t run normally.

A7.02 Direction of PG	0～1【0】

0：A phase lead B phase　　1：B phase lead A phase

A phase lead B phase when motor run forward.B phase lead A phase when motor run reverse.If the direction which decided by the wiring sequence between interface board and PG is the same as the direction which decided

by the wiring sequence between drive and motor,then set this parameter as 0 (Forwards),or set it as 1 (Reverse).

By changing this parameter,the user can change the direction without re-wiring.

A7.03 Encoder signal filter number	0～99H【30H】

This parameter defines the filter number of feedback speed.

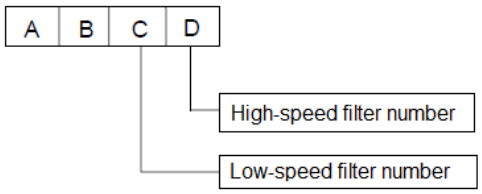

Increase the low-speed filter number if there is current noise when running at low speed,or decrease the low-speed filter number to enhance the system's response.

A7.04 PG disconnection detecting time	0～10s【0】

This parameter defines the continuous detecting time for disconnection fault of PG.

When set A7.04 to 0,then the drive doesn't detect the PG disconnection and the fault E025 is masking.

A7.05 Reduction rate of motor and encoder	0.001~65.535【1.000】

This parameter should be set to 1 when the encoder is connected to the motor axis directly.Or if there is reduction rate between motor axis and encoder,then please set this parameter according to the actual situation.

6.9 Group A8

A8.00 Protective action of relay	0～1111H【0000】

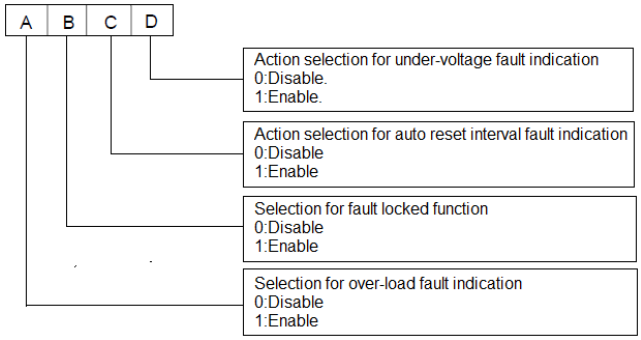

A8.01 Fault masking selection 1	0～2222H【2000】

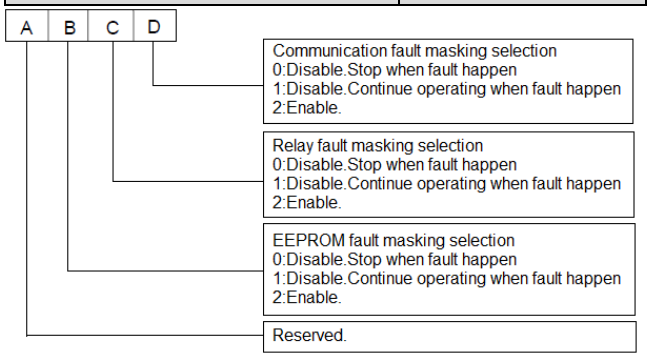

A8.02 Fault masking selection 2	0～2222H【0000】

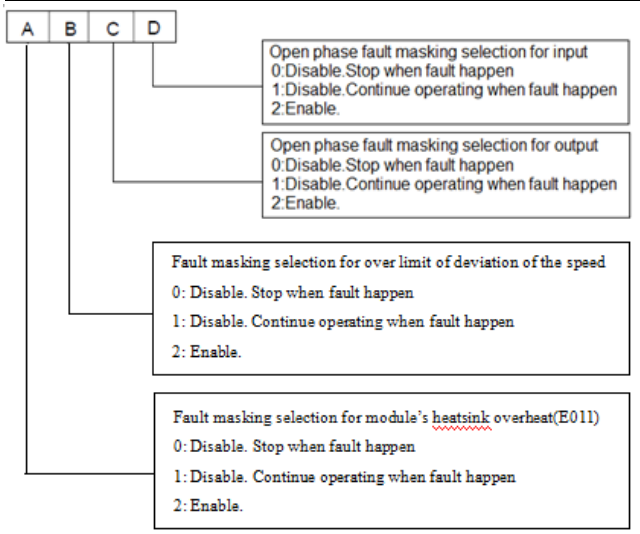

⚠ Attention Please set the fault masking selection function carefully,or it may cause worse accident,bodily injury and property damage.

A8.03 Motor overload protection mode selection	0、1、2【1】

0: Disabled

The overload protection is disabled. Be careful to use this function because the drive will not protect the motor when overload occurs.

1: Common motor (with low speed compensation)

Since the cooling effects of common motor deteriorates at low speed (below 30Hz), the motor's overheat protecting threshold should be lowered, which is called low speed compensation.

2: Variable frequency motor (without low speed compensation) The cooling effects of variable frequency motor is not affected by the motor's speed, so low speed compensation is not necessary.

A8.04 Auto reset times	0～100【0】
A8.05 Reset interval	2.0～20.0s【5.0s】

Auto reset function can reset the fault in preset times and interval. When A8.04 is set to 0, it means "auto reset" is disabled and the protective device will be activated in case of fault.

Note:

The IGBT protection (E010) and external equipment fault (E015) cannot be reset automatically.

A8.06 Fault locking function selection.	0～1【0】

0:Disable.

1:Enable.

6.10 Group b0

b0.00 Rated power	0.4～999.9kW【dependent on drive's model】
b0.01Rated voltage	0~rated voltage of drive【dependent on drive's model】
b0.02 Rated current	0.1～999.9A【dependent on drive's model】
b0.03 Rated frequency	1.00～300.00Hz【dependent on drive's model】
b0.04 Number of polarities of motor	2～24【4】
b0.05 Rated speed	0～60000RPM【1440RPM】

These parameters are used to set the motor's parameters. In order to ensure the control performance, please set b0.00~b0.05 with reference to the values on the motor's nameplate.

Note:

The motor's power should match that of the drive.Generally the motor's power is allowed to be lower than that of the drive by 20% or bigger by 10%, otherwise the control performance cannot be ensured.

b0.06 Resistance of stator %R1	0.00～50.00%【dependent on drive's model】
b0.07 Leakage inductance %Xl	0.00～50.00%【dependent on drive's model】
b0.08 Resistance of rotor %R2	0.00～50.00%【dependent on drive's model】
b0.09 Exciting inductance %Xm	0.0～2000.0%【dependent on drive's model】
b0.10 Current without load I0	0.1～999.9A【dependent on drive's model】

See Fig. 6-33 for the above parameters.

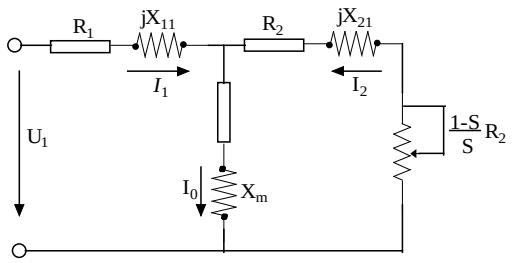

Fig. 6-33 Motor's equivalent circuit

In Fig. 6-33, R1, X1l, R2, X2l, Xm and I0 represent stator's resistance, stator's leakage inductance, rotor's

resistance, rotor's leakage inductance, exciting inductance and current without load respectively. The setting of b0.07 is the sum of stator's leakage inductance and rotor's inductance.

The settings of b0.06 ~b0.09 are all percentage values calculated by the formula below:

$$\%R = \frac{R}{V/(\sqrt{3} \times I)} \times 100\% \quad (1)$$

R: Stator's resistance or rotor's resistance that is converted to the rotor's side;

V: Rated voltage;

I: Motor's rated current

Formula used for calculating inductance (leakage inductance or exciting inductance):

$$\%X = \frac{X}{V/(\sqrt{3} \times I)} \times 100\% \quad (2)$$

X: sum of rotor's leakage inductance and stator's leakage inductance (converted to stator's side) or the exciting inductance based on base frequency.

V: Rated voltage;

I: Motor's rated current

If motor's parameters are available, please set b0.06~b0.09 to the values calculated according to the above formula. b0.10 is the motor current without load,the user can set this parameter directly.

If the drive performs auto-tuning of motor's parameters,the results will be written to b0.06~b0.10 automatically.After motor power (b0.00) is changed, the drive will change b0.02~b0.10 accordingly(b0.01 is the rated voltage of motor,user need to set this parameter by manual according to the value on the motor's nameplate.)

b0.11 Auto-tuning	0～3【0】

0: Auto-tuning is disabled

1: Stationary auto-tuning (Start auto-tuning to a standstill motor)

Values on the motor's nameplate must be input correctly before starting auto-tuning（b0.00～b0.05）.When starting auto-tuning to a standstill motor, the stator's resistance (%R1), rotor's resistance (%R2) and the leakage inductance (%X1) will be detected and written into b0.06、b0.07 and b0.08 automatically.

2: Rotating auto-tuning

Values on the motor's nameplate must be input correctly before starting auto-tuning（b0.00～b0.05）.When starting a rotating auto-tuning, the motor is in standstill status at first, and the stator's resistance (%R1), rotor's resistance (%R2) and the leakage inductance (%X1) will be detected, and then the motor will start rotating, exciting inductance (%Xm and I0 will be detected. All the above parameters will be saved in b0.06、b0.07、b0.08、b0.09 and b0.10 automatically.After auto-tuning, b0.05 will be set to 0 automatically.

Auto-tuning procedures:

1). A0.13 (Torque boost of motor 1) is suggested to set as 0.

2). Set the parameters b0.00 (Rated power), b0.01 (Rated voltage), b0.02 (Rated current), b0.03 (Rated frequency), b0.04 (Number of polarities of motor) and b0.05 (Rated speed) correctly;

3). Set the parameter A0.10 correctly.The setting value of A0.10 can't be lower than rated frequency.

4). Remove the load from the motor and check the Safety when set the parameter b0.11 as 2.

5). Set b0.11 to 1 or 2, press ENTER, and then press RUN to start auto-tuning;

6). When the operating LED turns off, that means the auto-tuning is over.

3:Reserved.

Note:

1.When setting b0.11 to 2, Acc/Dec time can be increased if over-current or over-voltage fault occurs in the auto-tuning process;

2.When setting b0.11 to 2, the motor's load must be removed first before starting rotating auto-tuning;

3. The motor must be in standstill status before starting the auto-tuning, otherwise the auto-tuning cannot be executed normally;

4. In some applications, for example, the motor cannot break away from the load or if you have no special requirement on motor's control performance, you can select stationary auto-tuning. You can also give up the auto-tuning. At this time, please input the values on the motor's nameplate correctly .

5. If the auto-tuning cannot be applied and the correct motor's parameters are available, the user should input the values on the motor's nameplate correctly (b0.00~b0.05), and then input the calculated values (b0.06~b0.10). Be sure to set the parameters correctly.

6. If auto-tuning is not successful, the drive will alarm and display fault code E024.

b0.12 Motor's overload protection coefficient	20.0% ～ 110.0% 【100.0%】

In order to apply effective overload protection to different kinds of motors, the Max. output current of the drive should be adjusted as shown in Fig. 6-34.

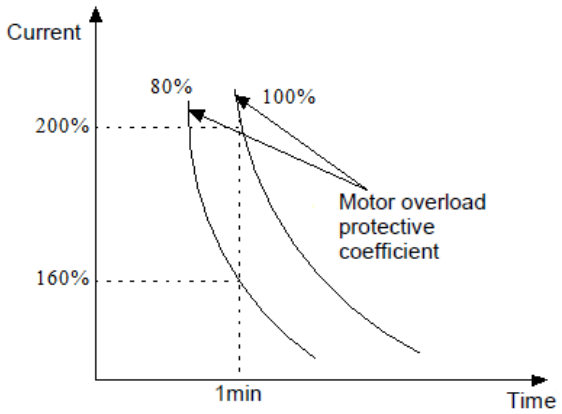

Fig.6-34 Motor's overload protection coefficient

This parameter can be set according to the user's requirement. In the same condition, set b0.12 to a lower value if the user need fast protection for overload of motor, otherwise set it to a bigger value.

Note:

If the motor's rated current does not match that of the drive, motor's overload protection can be realized by setting b0.12.

b0.13 Oscillation inhibition coefficient	0～255【10】

Adjust this parameter can prevent motor oscillation when drive using V/F control.

6.11 Group b1

b1.00 V/F curve setting	0～3【0】
b1.01 V/F frequency value F3 of motor 1	b1.03～A0.08【0.00Hz】
b1.02 V/F voltage value V3 of motor 1	b1.04～100.0%【0.0%】
b1.03 V/F frequency value F2 of motor 1	b1.05～b1.01【0.00Hz】
b1.04 V/F voltage value V2 of motor 1	b1.06～b1.02【0.0%】
b1.05 V/F frequency value F1 of motor 1	0.00～b1.03【0.00Hz】
b1.06 V/F voltage value V1 of motor 1	0.0～b1.04【0.0%】

This group of parameters define the V/F setting modes of FV100 so as to satisfy the requirements of different loads. 3 preset curves and one user-defined curve can be selected according to the setting of b1.00.

If b1.00 is set to 1, a 2-order curve is selected, as shown in Fig. 6-35 as curve 1;

If b1.00 is set to 2, a 1.7-order curve is selected, as shown in Fig. 6-35 as curve 2;

If b1.00 is set to 3, a 1.2-order curve is selected, as shown in Fig. 6-35 as curve 3;

The above curves are suitable for the variable-torque loads such as fan & pumps. You can select the curves according to the actual load so as to achieve best energy-saving effects.

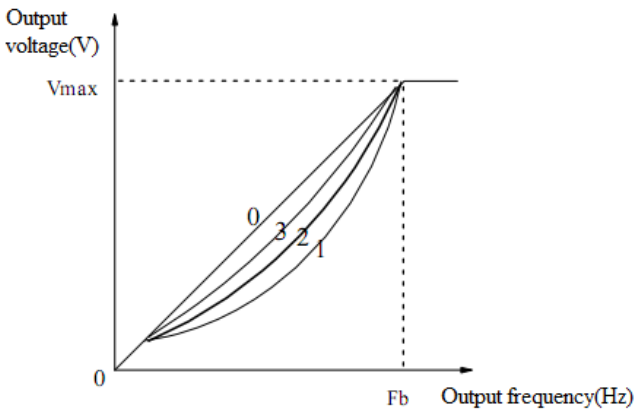

Vmax: Max.output voltage
Fb: Basic operating frequency A0.12

Fig.6-35 Torque-reducing curve

If b1.00 is set to 0, you can define V/F curve via b1.01~b1.06, as shown in Fig. 6-36. The V/F curve can be defined by connecting 3 points of (V1,F1), (V2,F2) and (V3, F3), to adapt to special load characteristics.

Default V/F curve set by factory is a direct line as show in Fig. 6-35 as curve 0.

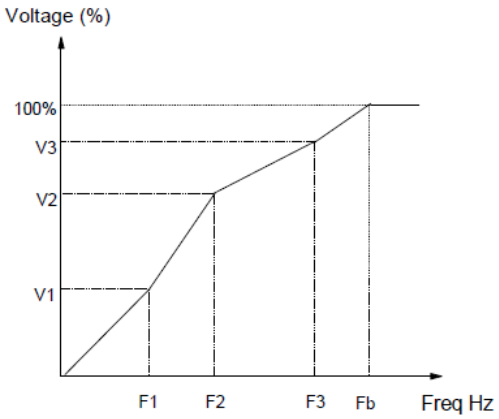

V1~V3: Voltage of sections 1~3
F1~F3: Freq of sections 1~3
Fb：Basic operating frequency of A0.12

Fig.6-36V/F curve defined by user

b1.07 Cut-off point used for manual torque boost	0.0%～50.0%【10.0%】

b1.07 defines the ratio of the cut-off frequency used for manual torque boost to the basic operating frequency (defined by A0.12), as shown in Fig. 6-36 as Fz.This cut-off frequency adapts to any V/F curve defined by b1.00.

b1.08 AVR function	0～2【1】

0: Disable

1: Enable all the time

2: Disabled in Dec process

AVR means automatic voltage regulation.

The function can regulate the output voltage and make it constant. Therefore, generally AVR function should be enabled, especially when the input voltage is higher than the rated voltage.

In Dec-to-stop process, if AVR function is disabled, the Dec time is short but the operating current is big. If AVR function is enabled all the time, the motor decelerates steadily, the operating current is small but the Dec time is prolonged.

b1.09 VF Output Voltage Selection	0~3
b1.10 VF Output Voltage Offset Selection	0~3

Example 1:The output voltage in V/F mode is controlled by AI.

Set a value (not zero) to b1.09 to select an analog input to control voltage output.This function is only valid in V/F control mode.The output frequency and output voltage VO is completely independent of each other.The output voltage is controlled by analog input signal,not by the V/F curve in Group b1,as shown in Fig.6-37.

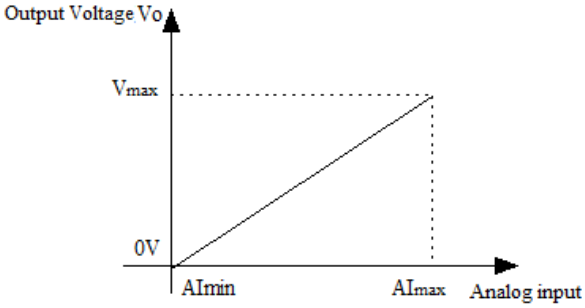

Fig.6-37 Curve of Output voltage

Example 2:The offset of output voltage in V/F mode is controlled by AI.

Set a value (not zero) to b1.10 to select an analog input to control the offset of voltage output.As shown in Fig.6-38.

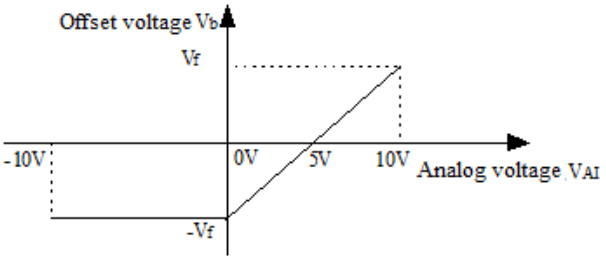

Fig.6-38 Offset of output voltage

The output voltage corresponding to the setting frequency in the V/F curve is V/F, then the relationship between analog input and offset voltage is as follows:

If analog input VAI is -10V～0V or 4mA, then the corresponding offset voltage is –V or F. If analog input VAI is 10V or 20mA, then the corresponding offset voltage is V or F.

The output voltage is VO＝V/F+Vb

Note

AI offset is only valid in V/F control mode.

6.12 Group b2

b2.00 Carrier wave frequency	2.0～15.0kHz【6kHz】

Drive's type and carrier wave frequency (CWF)

Drives power	Default CWF value
2.2～5.5 kW	10kHz
7.5～55 kW	6kHz
55～250 kW	2kHz

Note:

1. The carrier wave frequency will affect the noise when motor running, generally the carrier wave frequency is supposed to set as 3~5kHz. For some special situation where require operating mutely, the carrier wave frequency is supposed to set as 6~8kHz.

2. When set the carrier wave frequency larger than default value, then the power of drive need to derate 5% by every increase of 1kHz.

b2.01Auto adjusting of CWF	0～1【1】

0: Disable

1: Enable

b2.02 Voltage adjustment selection	000～111H【001H】
b2.03 Overvoltage point at stall	120～150%【140.0%】

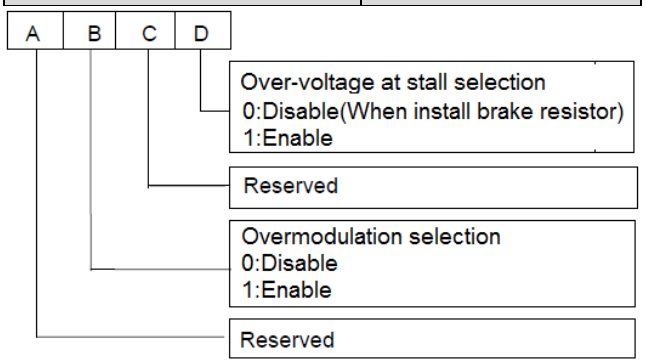

During deceleration, the motor's decelerate rate may be lower than that of drive's output frequency due to the load inertia. At this time, the motor will feed the energy back to the drive, resulting in the voltage rise on the drive's DC bus. If no measures taken, the drive will trip due to over voltage.

During the deceleration, the drive detects the bus voltage and compares it with the over voltage point at stall defined by b2.03. If the bus voltage exceeds the stall overvoltage point, the drive will stop reducing its output frequency. When the bus voltage becomes lower than the point, the deceleration continues. As shown in Fig.6-39.

The hundred's place is used to set overmodulation function of V/F control. For vector control, the overmodulation function will be always enable. Overmodulation means when the voltage of power grid is low for long term (Lower than 15% of rated voltage), or is overload working for long term, then the drives will increase the use ratio of its own bus voltage to increase output voltage.

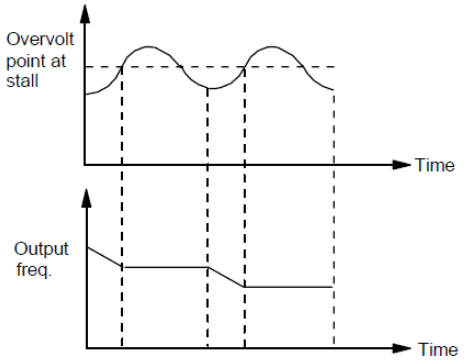

Fig.6-39 Over-voltage at stall

b2.04: Droop control	0.00~10.00Hz【0.00Hz】
b2.05 Auto current limiting threshold	20.0 ～ 200.0%【150.0%】
b2.06 Frequency decrease rate when current limiting	0.00 ～ 99.99Hz/s【1.00Hz/s】
b2.07 Auto current limiting selection	0～1【1】

Droop control is used to distribute the load automatically by adjusting the output frequency when several VFDs drive the same load.

Auto current limiting function is used to limit the load current smaller than the value defined by b2.05 in real time. Therefore the drive will not trip due to surge over-current. This function is especially useful for the applications with big load inertia or big change of load.

b2.05 defines the threshold of auto current limiting. It is a percentage of the drive's rated current.

b2.06 defines the decrease rate of output frequency when the drive is in auto current limiting status.

If b2.06 is set too small, overload fault may occur. If it is set too big, the frequency will change too sharply and therefore, the drive may be in generating status for long time, which may result in overvoltage protection.

Auto current limiting function is always active in Acc or Dec process. Whether the function is active in constant speed operating process is decided by b2.07.

b2.07＝0, Auto current limiting function is disabled in constant speed operating process;

b2.07＝1, Auto current limiting function is enabled in constant speed operating process;

In auto current limiting process, the drive's output frequency may change; therefore, it is recommended not to enable the function when the drive's output frequency is required stable.

When the auto current limiting function is enabled, if b2.05 is set too low, the output overload capacity will be impaired.

b2.08 Gain of slip compensation	0.0~300.0%【100%】
b2.09 Limit of slip compensation	0.0~250.0%【200%】
b2.10 Slip compensation time constant	0.1~25.0s【2】
b2.11 Energy-saving function	0:Disable. 1:Enable. 【0】
b2.12 Frequency decrease rate at voltage compensation	0.00~99.99Hz【10.00 Hz/s】

b2.13Threshold of zero-frequency operation	0.00~300.00Hz【0.50 Hz/s】

This parameter is used together with No.9 function of digital output terminal.

b2.14 Reserved	
b2.15 Fan control	0～1【0】

0: Auto operating mode.

The fan runs all the time when the drive is operating.

After the drive stops, its internal temperature detecting program will be activated to stop the fan or let the fan continue to run according to the IGBT's temperature.

The drive will activate the internal temperature detecting program automatically when it is operating,and run or stop the fan according to the IGBT's temperature.If the fan is still running before the drive stop,then the fan will continue running for three minutes after the drive stops

and then activate the internal temperature detecting program.

1: The fan operates continuously when the power is on.

6.13 Group b3

Details please refer to the Group b3 of function list in chapter 9.

6.14 Group b4

b4.00 Key-lock function selection	0～4【0】

0: The keys on the operation panel are not locked, and all the keys are usable.

1: The keys on the operation panel are locked, and all the keys are unusable.

2: All the keys except for the M (Multi-function)key are unusable.

3: All the keys except for the SHIFT key are unusable.

4: All the keys except for the RUN AND STOP keys are unusable.

b4.01 Multi-functional key function	0～5【4】

0: Jog

1: Coast to stop

2: Quick stop

3: Operating commands switchover

4: Switch forward/reverse.(Save after power failure)

5: Switch forward/reverse.(Not save after power failure)

b4.02 Parameter protection	0～2【0】

0: All parameters are allowed modifying;

1: Only A0.03 and b4.02 can be modified;

2: Only b4.02 can be modified.

b4.03 Parameter initialization	0～2【0】

0: Parameter adjustable

1: Clear fault information in memory

2: Restore to factory settings

b4.04 Parameter copy	0～3【0】

0: No action

1: parameters upload

2: parameters download

3: parameters download (except the parameters related to drive type)

b4.05 Display parameters selection	0~7FFFH【1007H】

b4.05 define the parameters that can be displayed by LED in operating status.

If Bit is 0, the parameter will not be displayed;

If Bit is 1, the parameter will be displayed.

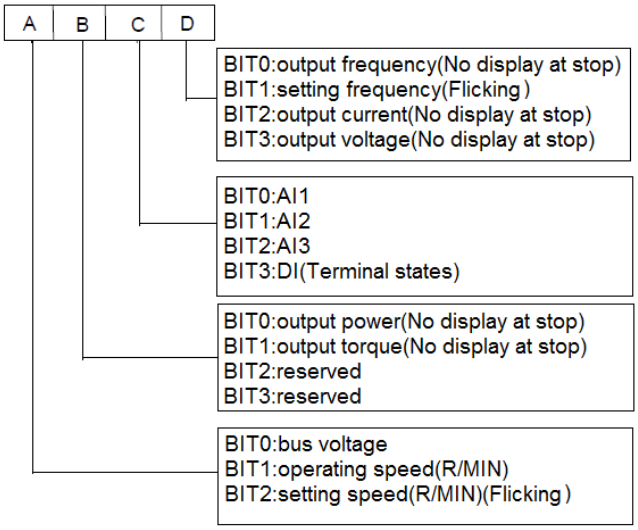

Note:

If all the BITs are 0, the drive will display setting frequency at stop and display output frequency at operating

b4.06 Operating frequency ratio	0.00～99.99【1.00】

It is used to multiply the operating frequency and the ratio as the final value to display in the panel.

Displayed value=operating frequency*b4.06

b4.07 Operating speed ratio	0.000 ～ 30.000【1.000】

It is used to multiply the operating speed and the ratio as the final value to display in the panel.

Displayed value=operating speed*b4.06

6.15 Group C0

C0.00 Preset frequency 1	Lower limit of frequency~ upper limit of frequency 【5.00Hz】
C0.01 Preset frequency 2	Lower limit of frequency~ upper limit of frequency 【10.00Hz】
C0.02 Preset frequency 3	Lower limit of frequency~ upper limit of frequency 【15.00Hz】
C0.03 Preset frequency 4	Lower limit of frequency~ upper limit of frequency 【20.00Hz】
C0.04 Preset frequency 5	Lower limit of frequency~ upper limit of frequency 【25.00Hz】
C0.05 Preset frequency 6	Lower limit of frequency~ upper limit of frequency 【30.00Hz】
C0.06 Preset frequency 7	Lower limit of frequency~ upper limit of frequency 【35.00Hz】
C0.07 Preset frequency 8	Lower limit of frequency~ upper limit of frequency 【40.00Hz】
C0.08 Preset frequency 9	Lower limit of frequency~ upper limit of frequency 【45.00Hz】
C0.09 Preset frequency 10	Lower limit of frequency~ upper limit of frequency 【50.00Hz】
C0.10 Preset frequency 11	Lower limit of frequency~ upper limit of frequency 【10.00Hz】
C0.11 Preset frequency 12	Lower limit of frequency~ upper limit of frequency 【20.00Hz】
C0.12 Preset frequency 13	Lower limit of frequency~ upper limit of frequency 【30.00Hz】
C0.13 Preset frequency 14	Lower limit of frequency~ upper limit of frequency 【40.00Hz】
C0.14 Preset frequency 15	Lower limit of frequency~ upper limit of frequency 【50.00Hz】

These frequencies will be used in multi-step speed operation, refer to the introductions of No.27,28,29 and 30 function of A6.00～A6.07.

6.16 Group C1

Process close-loop control

The process closed-loop control type of FV100 is analog close-loop control. Fig.6-40 shows the typical wiring of analog close-loop control.

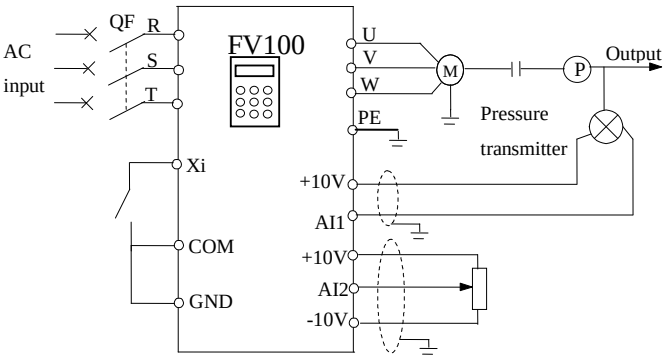

Fig.6-40 Analog feedback control system with internal process close-loop

Analog feedback control system:

An analog feedback control system uses a pressure transmitter as the feedback sensor of the internal close-loop.

As shown in Fig. 6-40, pressure reference (voltage signal) is input via terminal AI2, while the feedback pressure value is input into terminal AI1 in the form of 4~20mA current signal. The reference signal and feedback signal are detected by the analog channel.The start and stop of the drive can be controlled by terminal Xi.

The above system can also use a TG (speed measuring generator) in close speed-loop control.

Note:

The reference can also be input via panel or serial port.

Operating principles of internal process close-loop of FV100 is shown in the Fig. 6-41

In the Fig。, KP: proportional gain; Ki: integral gain

In Fig. 6-41, refer to C1.00~C1.14 for the definitions of close-loop reference, feedback, error limit and proportional and Integral parameters.

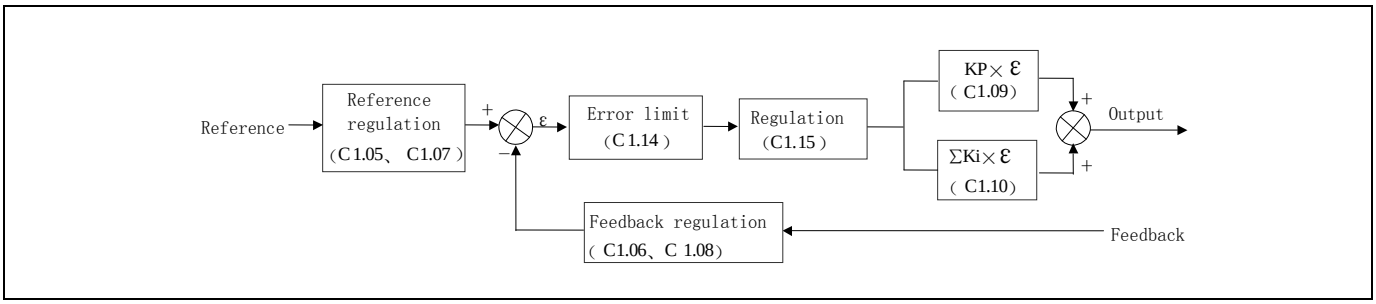

Fig.6-41 Principle diagram of process close-loop control

There are two features of internal close-loop of FV100:

The relationship between reference and feedback can be defined by C1.05～C1.08

For example: In Fig.6-40, if the reference is analog signal of -10~10V, the controlled value is 0~1MP, and the signal of pressure sensor is 4~20mA, then the relationship between reference and feedback is shown in Fig. 6-42.

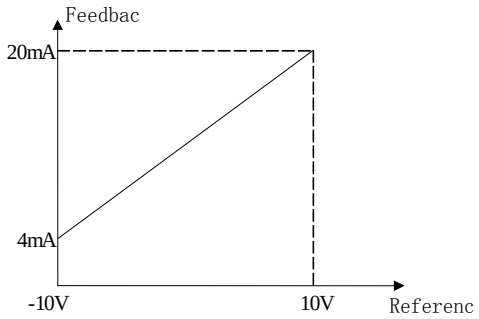

Fig.6-42 Reference and feedback

After the control type is determined, follow the procedures below to set close loop parameters.

1) Determine the close-loop reference and feedback channel (C1.01 and C1.02);

2) The relationship between close-loop reference and feedback value (C1.05～C1.08) should be defined for analog close-loop control;

3) Determine the close-loop regulation characteristic, if the relationship between motor speed and the reference is opposite,then set the close-loop regulation characteristic as negative characteristic(C1.15=1).

4) Set up the integral regulation function and close-loop frequency presetting function (C1.16～C1.18);

5) Adjust the close-loop filtering time, sampling cycle, error limit and gain(C1.09～C1.14).

C1.00 Close-loop control function	0、1【0】

0：Disable.

1：Enable.

C1.01 Reference channel selection	0～3【1】

0: digital input

Take the value of C1.03 .

1: AI1 analog input.

2: AI2 analog input

3:AI3 analog voltage input.

C1.02 Feedback channel selection	0～5【1】

0: AI1 analog input

1: AI2 analog input

2: AI1+ AI2

3: AI1－AI2

4: Min{ AI1，AI2}

5: Max{ AI1，AI2}

6: Pulse DI

Settings of AI are the same as above.

C1.03 Digital setting of reference	－10.00～10.00V【0.00】

This function can realize digital setting of reference via panel or serial port.

C1.04 Close-loop speed reference	0～39000rpm
C1.05 Min reference	0.0％～C1.08【0.0％】
C1.06 Feedback value corresponding to the Min reference	0.0～100.0％【0.0％】
C1.07 Max reference	C1.06 ～ 100.0 ％【100.0％】
C1.08 Feedback value corresponding to the Max reference	0.0～100.0％【100.0％】

The regulation relationship between C1.05,C1.07(in Fig.6-41) and reference is shown in Fig.6-43.When the analog input 6V,if C1.05＝0％ and C1.07＝100%，then adjusted value is 60％.If C1.05＝25％ and C1.07＝100%，then the adjusted value is 46.6％.

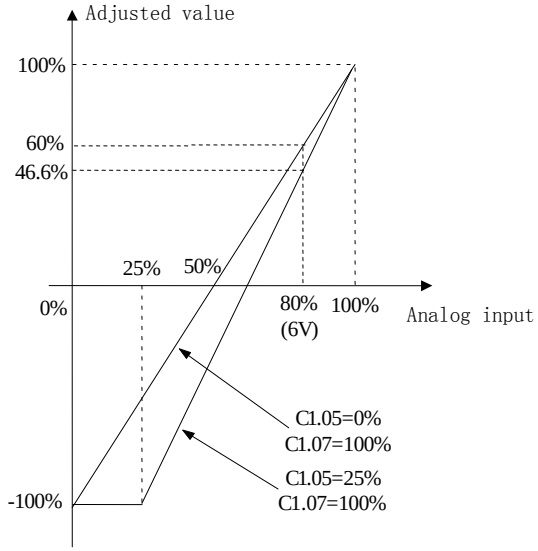

Fig.6-43 Regulation curve of reference

Note:

1．Fig.6-43,0％～100％ in X axis is corresponding to analog input －10V～10V,10V of analog input is corresponding to 100％,and－10V is corresponding to 0％,6V is corresponding to 80％.

2．If the analog type is current input,because of the currentinput range is 4～20mA,then the range of X axis is 50％～100％.

3．The adjusted value can be observed in d0.24.

The regulation relationship between C1.06, C1.08(in Fig.6-41) and feedback is similar to reference regulation.Its adjusted value can be observed in d0.25.

C1.09 Proportional gain KP	0.000～10.000【2.000】
C1.10 Integral gain Ki	0.000～10.000【0.100】
C1.11 Differential gain Kd	0.000～10.000【0.100】
C1.12 Sampling cycle T	0.01～50.00s【0.50s】

The bigger the proportional gain of KP, the faster the response, but oscillation may easily occur.

If only proportional gain KP is used in regulation, the error cannot be eliminated completely. To eliminate the error, please use the integral gain Ki to form a PI control system. The bigger the Ki, the faster the response, but oscillation may easily occur if Ki is too big.

The sampling cycle T refers to the sampling cycle of feedback value. The PI regulator calculates once in each sampling cycle. The bigger the sampling cycle the slower the response.

C1.13 Output filter	0.01～10.00【0.05】

This parameter defines the filter time of the close-loop output (Frequency or torque).The bigger the output filter,the slower the response.

C1.14 Error limit	0.0～20％【2.0％】

This parameter defines the max. deviation of the output from the reference, as shown in Fig. 6-44. Close-loop regulator stops operation when the feedback value is within this range.Setting this parameter correctly is helpful to improve the system output accuracy and stability.

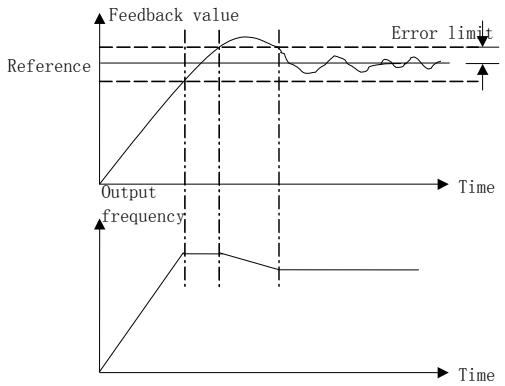

Fig.6-44 Error limit

C1.15 Close-loop regulation characteristic	0、1【0】

0: Positive

Set C1.15 to 0 if the motor speed is required to be increased with the increase of the reference.

1: Negative

Set C1.15 to 1 if the motor speed is required to decrease with the increase of the reference.

C1.16 Integral regulation selection	0、1【0】

0: Stop integral regulation when the frequency reaches the upper and lower limits

1: Continue the integral regulation when the frequency reaches the upper and lower limits

It is recommended to disable the integral regulation for the system that requires fast response.

C1.17 Preset close-loop frequency	0.00～1000.0Hz【0.00Hz】
C1.18 Holding time of Preset close-loop frequency	0.0～3600.0s【0.0s】

This function can make the close-loop regulation enter stable status quickly.

When the close-loop function is enabled, the frequency will ramp up to the preset close-loop frequency (C1.17) within the Acc time, and then the drive will start close-loop operation after operating at the preset frequency for certain time(defined by C1.18).

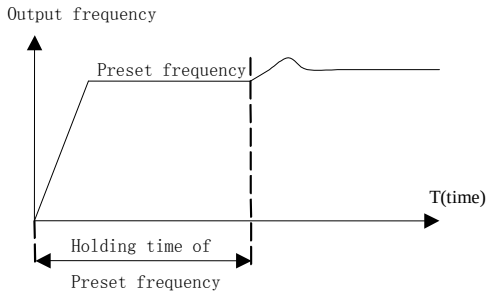

Fig.6-45 Preset frequency of close-loop operation

Note:

You can disable the function by set both C1.17 and C1.18 to 0.

C1.19 Preset close-loop reference 1	－10.00～10.00V【0.00V】
C1.20 Preset close-loop reference 2	－10.00～10.00V【0.00V】
C1.21 Preset close-loop reference 3	－10.00～10.00V【0.00V】
C1.22 Preset close-loop reference 4	－10.00～10.00V【0.00V】
C1.23 Preset close-loop reference 5	－10.00～10.00V【0.00V】
C1.24 Preset close-loop reference 6	－10.00～10.00V【0.00V】
C1.25 Preset close-loop reference 7	－10.00～10.00V【0.00V】
C1.26 Preset close-loop reference 8	－10.00～10.00V【0.00V】
C1.27 Preset close-loop reference 9	－10.00～10.00V【0.00V】
C1.28 Preset close-loop reference 10	－10.00～10.00V【0.00V】

C1.29 Preset close-loop reference 11	－10.00～10.00V【0.00V】
C1.30 Preset close-loop reference 12	－10.00～10.00V【0.00V】
C1.31 Preset close-loop reference 13	－10.00～10.00V【0.00V】
C1.32 Preset close-loop reference 14	－10.00～10.00V【0.00V】
C1.33 Preset close-loop reference 15	－10.00～10.00V【0.00V】

Among the close-loop reference selectors, besides the 3 selectors defined by C1.01, the voltage value defined by C1.19~C1.33 can also be used as the close-loop reference.

Voltage of preset close-loop reference 1~15 can be selected by terminals, refer to introductions to A6.00~A6.06 for details.

The priority preset close-loop reference control is higher than the reference selectors defined by C1.01

C1.34 Close-loop output reversal selection	0、1【0】

0: The close-loop output is negative,the drive will operate at zero frequency.

1: The close-loop output is negative,and the drive operate reverse.If the anti-reverse function is activated,then the drive will operate at zero frequency.Refer to the instructions of A1.12.

C1.35 Sleep function selection	0,1【0】

0:Disable

1:Enable.

C1.36 Sleep level	0.0～100.0%【50.0%】
C1.37 Sleep latency	0.0～600.0s【30.0s】
C1.38 Wake-up level	0.0～100%【50.0%】

As shown in Fig.6-46,when the output frequency is lower than the sleep level(C1.36),timer for sleep latency will start.When the output frequency is larger than the sleep level,the timer for sleep latency will stop and clear.If the time of the situation that the output frequency is lower than the sleep level is longer than sleep latency(C1.37),then the driver will stop.When the actual feedback value is higher than wake-up level(C1.38),the driver will start again.

In Sleep level (C1.36), 100% is corresponding to the frequency in A0.08.

In Wake-up level (C1.38), 100% is corresponding to 10V or 20mA.

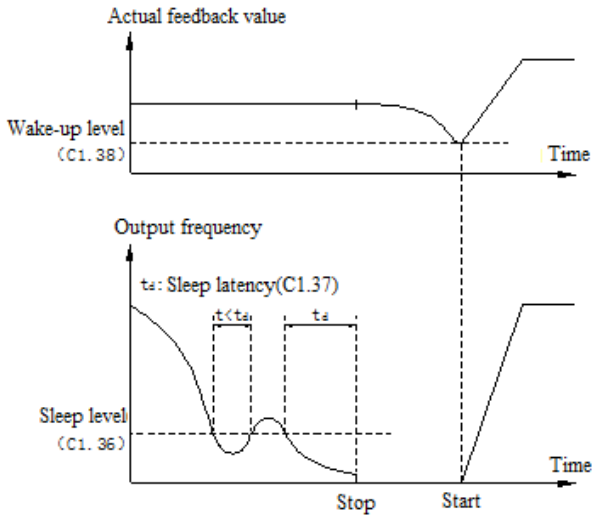

Fig.6-46 Sleep Function

6.17 Group C2

Simple PLC function

Simple PLC function is used to run different frequency and direction in different time automatically,as shown in Fig.6-46

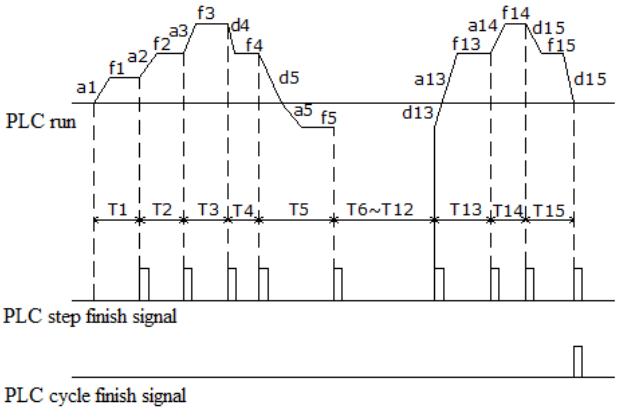

Fig.6-46 Simple PLC function

In Fig.6-46, a1~a15 and d1~d15 are the acceleration and deceleration of the steps.f1~f15 and T1~T15 are the setting frequency and operating time of the steps.There parameters are defined in group C2.

PLC step finish signal and PLC cycle finish signal can be output with pulse signal which last 500ms by bi-direction open collector output Y1, open collector output Y2 or relay. Set function code as 12 and 13 for parameters A6.14, A6.16 or A6.25.

C2.00 Simple PLC operation mode selector	0~1123H【0000】

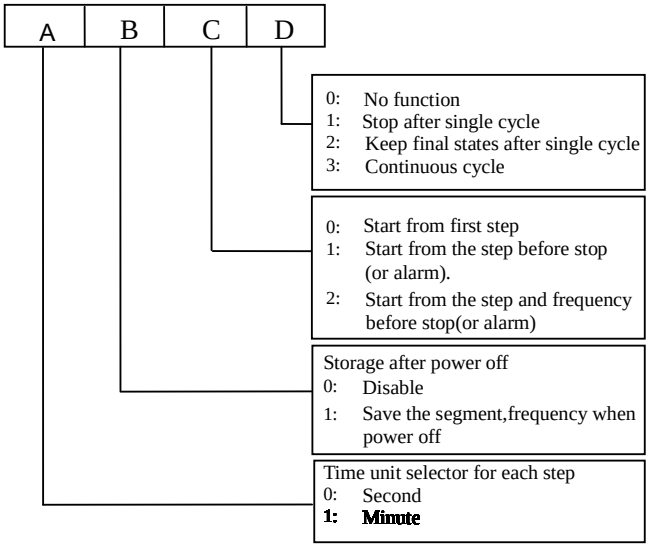

The unit's place of LED: PLC function running mode

0: No function.

Simple PLC function is invalid.

1: Stop after single cycle.

As shown in Fig.6-47, the drive will stop automatically after finishing one cycle running,the wait for another start signal to startup.

Fig.6-47 Stop after single cycle

2. Keep final states after single cycle

As shown in Fig.6-48, the drive will keep running at the frequency and direction in last step after finishing single cycle.

Fig.6-48 Keep final states after single cycle

3. Continuous cycle

As shown in Fig.6-49, the drive will continue next cycle after finishing one cycle, and stop when there is stop command.

Fig.6-49 Continuous cycle

selector	
C2.18 Step 9 operating time	0.0~6500.0【20.0】
C2.19 Step 10 setting mode selector	0~323H【0000】
C2.20 Step 10 operating time	0.0~6500.0【20.0】
C2.21 Step 11 setting mode selector	0~323H【0000】
C2.22 Step 11 operating time	0.0~6500.0【20.0】
C2.23 Step 12 setting mode selector	0~323H【0000】
C2.24 Step 12 operating time	0.0~6500.0【20.0】
C2.25 Step 13 setting mode selector	0~323H【0000】
C2.26 Step 13 operating time	0.0~6500.0【20.0】
C2.27 Step 14 setting mode selector	0~323H【0000】
C2.28 Step 14 operating time	0.0~6500.0【20.0】
C2.29 Step 15 setting mode selector	0~323H【0000】
C2.30 Step 15 operating time	0.0~6500.0【20.0】

C2.01~C2.30 are used to set the operating frequency, direction, Acc/Dec time and operating time for PLC function.Here takes C2.01 as example,as shown in Fig.6-52.

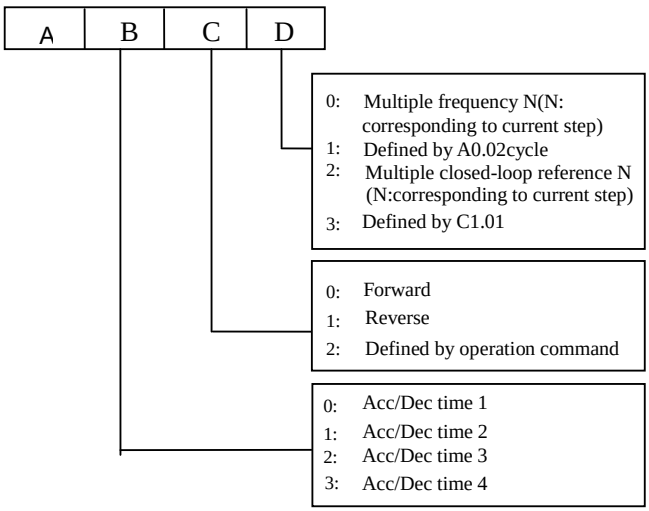

Fig.6-52 PLC steps setting

The unit's place of LED:

0: Multiple frequency N(N:corresponding to current step)The frequency of current step depends on the multiple frequency N.About the details of multiple frequency setting,please refer to Group C0.

1: Defined by A0.02.

Use A0.02 to set the frequency of current step.

2: Multiple closed loop reference N(N:corresponding to current step)The frequency of current step depends on the multiple closed loop reference N.About multiple closed loop setting,please refer to C1.19~C1.33.

3: Defined by C1.01.

PLC runs in process closed loop mode,the closed loop reference is defined by C1.01.

Ten's place of LED:

0: Forward

Set the direction of current step as forward

1: Reverse

Set the direction of current step as reverse

2: Defined by operation command

The direction of current step is defined by the operation command of terminals.

Note:

If the operation direction of current step can not be confirmed,then it will continue the previous direction.

6.18 Group C3

Swing function is suitable for application like spinning which requires winding and swing function.Its typical operation is as shown in Fig.6-53.

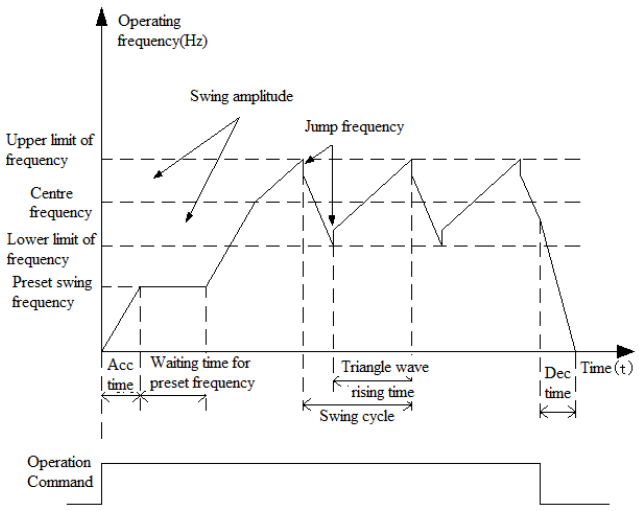

Fig.6-53 Swing operation

The process of swing control:

Firstly the drive accelerate to preset swing frequency (Set in C3.02), and wait for some time(Set in C3.03), then accelerate to center frequency,and run cyclic according to the swing amplitude(C3.04), Jump frequency (C3.05), Swing Cycle (C3.06) and Triangle wave rising time (C3.07),and then stop in dec time when there is stop command.

C3.00 Swing function selector	0~1【0】

0: Disable

1: Enable

C3.01 Swing Operation mode	0~1111H【0000】

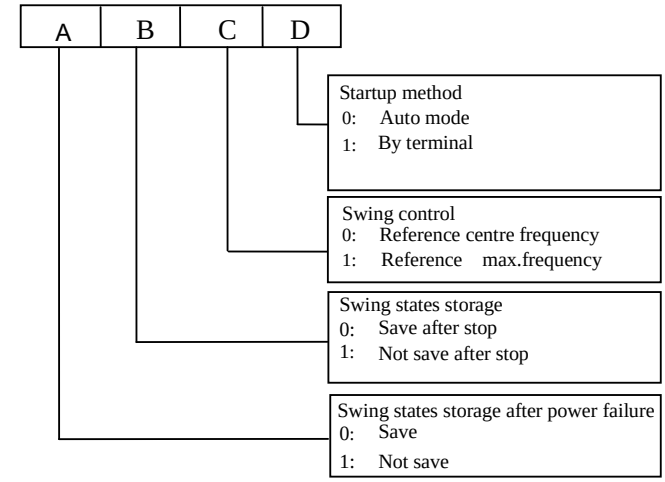

C3.02 Preset swing frequency	0.00Hz~A0.10【0.00】
C3.03 Waiting time for preset swing frequency	0.0～3600.0s【0.0s】

C3.02 is used to set the operating frequency of swing operation.C3.03 is used to set the continuous time of preset swing frequency, C3.03 is invalid when swing operation mode is set as 1.

C3.04 Swing amplitude	0.0%~50.0%【0.0%】

Swing amplitude setting value is the percentage corresponding to center frequency or max. frequency.

For center frequency:

Swing amplitude frequency=center frequency * C3.04.

For max. frequency:

Swing amplitude frequency=Max. frequency * C3.04.

C3.05 Jump frequency	0.0%~50.0%【0.0%】

As shown in Fig.6-53, when C3.05 is set to 0,then there is no jumping frequency.

C3.06 Swing cycle	0.1~999.9s【0.1s】

Swing cycle is the time from rising and falling of swing frequency.

C3.07 Triangle wave rising time	0.0%~100.0%(Swing cycle) 【50.0%】

C3.07 is the percentage corresponding to swing cycle,as shown in Fig.6-53.

Note:

Center frequency: It is the setting value of main reference frequency.

Max. frequency: It is the setting value of A0.08.

6.19 Group d0

The parameters of Group d0 are used to monitor some states of drives and motors.

d0.00 Main reference frequency	－300.0～300.0Hz【0.00】

This parameter is used to monitor main reference frequency at normal operation mode.

d0.01 Auxiliary reference frequency	－300.0～300.0Hz【0.00】

This parameter is used to monitor the auxiliary reference frequency at normal operation mode.

d0.02 Preset frequency	－300.0～300.0Hz【0.00】

This parameter is used to monitor the frequency combined by main reference frequency and auxiliary reference frequency.Positive indicates running forwards, negative indicates running reverse.

d0.03 Frequency after Acc/Dec	－300.0～300.0Hz【0.00】

This parameter is used to monitor the drive's output frequency (include direction) after the drive accelerating or decelerating.

d0.04 Output frequency	－300.0～300.0Hz【0.00】

This parameter is used to monitor the drive's output frequency (include direction).

d0.05 Output voltage	0～480V【0】

This parameter is used to monitor the drive's output voltage.

d0.06 Output current	0.0～3Ie【0】

This parameter is used to monitor the drive's output current.

d0.07 Torque current	－300.0％～300.0％【0.0％】

This parameter is used to monitor the percentage of drive's torque current that corresponding to the motor's rated current.

d0.08 Magnetic flux current	0.0％～100.0％【0.0】

This parameter is used to monitor the percentage of drive's magnetic flux current that corresponding to the motor's rated current.

d0.09 Motor power	0.0％～200.0％【0.0】

This parameter is used to monitor the percentage of drive's output power that corresponding to the motor's rated power.

d0.10 Motor estimated frequency	－ 300.00 ～ 300.00Hz【0.00】

This parameters is used to monitor the estimated motor rotor frequency under the condition of open-loop vector control.

d0.11 Motor actual frequency	－ 300.00 ～ 300.00Hz【0.00】

This parameter is used to monitor the actual motor rotor frequency measured by encoder under the condition of close-loop vector control.

d0.12 Bus voltage	0～800V【0】

This parameter is used to monitor the drive's bus voltage.

d0.13 Drive operation status	0000～FFFFH【0000】

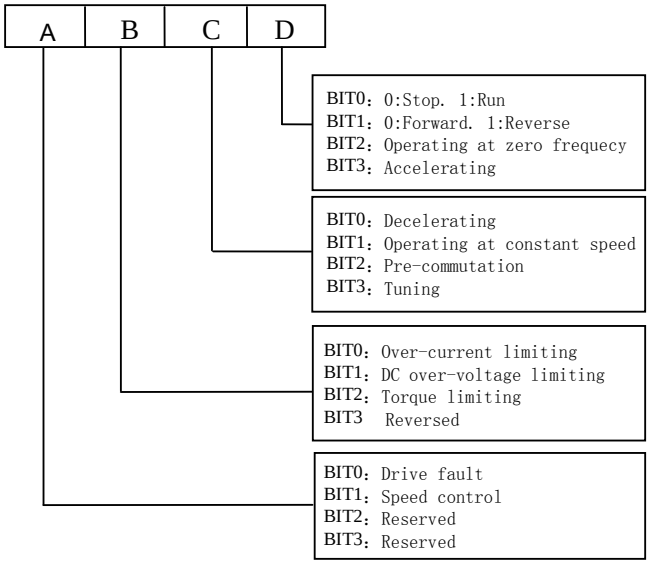

Fig.6-47 The drive's operation status

d0.14 Input terminals status	00～FFH【00】

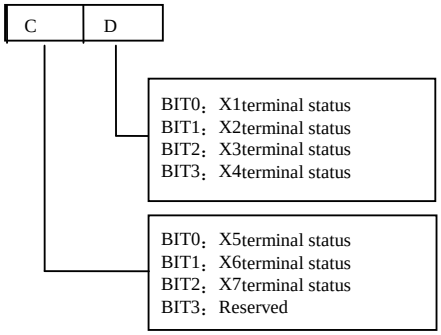

Fig.6-48 Input terminals status

This parameter is used to display the status of X1～X7. 0 indicates OFF status,1 indicates ON status.

d0.15 Output terminals status	0～1FH【0】

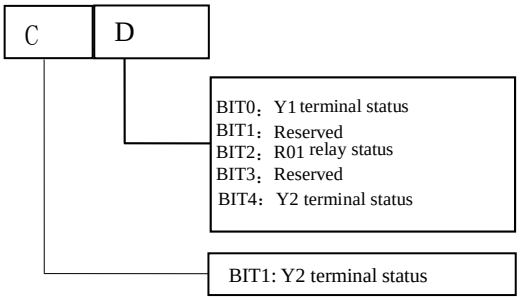

Fig.6-49 Output terminal status

This parameter is used to display the status of output terminals.When there is signal output,the corresponding bit will be set as 1.

d0.16 AI1 input	－10.00～10.00V【0.00】
d0.17 AI2 input	－10.00～10.00V【0.00】
d0.18 AI3 input	－10.00～10.00V【0.00】

d0.16～d0.18 are used to display the analog input value before regulation.

d0.19 Percentage of AI1 after regulation	-100.0%～100.0%【0.0】
d0.20 Percentage of AI2 after regulation	-100.0%～100.0%【0.0】
d0.21 Percentage of AI3 after regulation	-100.0%～100.0%【0.0】

d0.19～d0.21 are used to display the percentage of analog input after regulation.

d0.22 AO1 output	0.0%～100.0%【0.0】
d0.23 AO2 output	0.0%～100.0%【0.0】

d0.22、d0.23 are used to display the percentage of analog output that corresponding to the full range.

d0.24 Process close-loop reference	-100.0%～100.0%【0.0】
d0.25 Process close-loop feedback	-100.0%～100.0%【0.0】
d0.26 Process close-loop error	-100.0%～100.0%【0.0】
d0.27 Process close-loop output	-100.0%～100.0%【0.0】

d0.28 Temperature of heatsink 1	0.0～150.0℃【0.0】
d0.29 Temperature of heatsink 2	0.0～150.0℃【0.0】

Temperature of heatsink 1 is the temperature of IGBT modules. Different IGBT modules have different over-temperature threshold.

Temperature of heatsink 2 is the temperature of rectifier. The drive of 30kW or below does not detect this temperature.

Temperature display range:0～100℃.Accuracy: 5％

d0.30 Total conduction time	0～65535 hours【0】
d0.31 Total operating time	0～65535 hours【0】
d0.32 Total fan’s operating time	0～65535 hours【0】

d0.30～d0.32 define the drive’s total conduction time, operating time and fan’s operating time after production.

d0.33 ASR controller output	-300.0~300.0% (Corresponding to rated torque of motor
d0.34 Reference torque	-300.0~300.0%

	(Corresponding to rated torque of motor

6.20 Group d1

d1.00 Fault record 1	0～50【0】
d1.01 Bus voltage of the latest failure	0～999V【0】
d1.02 Actual current of the latest failure	0.0～999.9A【0】
d1.03 Operation frequency of the latest failure	0.00~300.0Hz【0.00】
d1.04 Operation status of the latest failure	0～FFFFH【0000】
d1.05 Fault record 2	0～50【0】
d1.06 Fault record 3	0～50【0】

FV100 support 50 kinds of protection alarm and can record the latest three fault code (d1.00,d1.05,d1.06) and bus voltage, current, operation frequency and operation status of the latest fault.

Fault record 1 is the latest fault record.

See Chapter 7 of failure and alarm information during failures recently occurred for the ease of Trouble Shooting and repair.

6.21 Group d2

d2.00 Serial number	0~FFFF【100】
d2.01 Software version number	0.00~99.99【1.00】
d2.02 Custom-made version number	0~9999【0】
d2.03 Rated capacity	0~999.9KVA【Factory】
d2.04 Rated voltage	0~999V【Factory】
d2.05 Rated current	0~999.9A【Factory 】

This group of parameters can’t be changed by user.

Chapter 7 Troubleshooting

Table 7-1 list the possible faults of FV100, the fault code varies from E001 to E050. Once a fault occurs, you may check it against the table and record the detailed phenomena before seeking service from your supplier.

Table 7-1 Faults and actions

Fault code	Fault categories	Possible reasons for fault	Actions
E001	Over-current during acceleration	Acc time is too short	Prolong the Acc time
		Parameters of motor are wrong	Auto-tune the parameters of motor
		Coded disc breaks down, when PG is running	Check the coded disc and the connection
		Drive power is too small	Select a higher power drive
		V/F curve is not suitable	Check and adjust V/F curve, adjust torque boost
E002	Over-current during deceleration	Deceleration time is too short	Prolong the Dec time
		The load generates energy or the load inertial is too big	Connect suitable braking kit
		Coded disc breaks down, when PG is running	Check the coded disc and the connection
		Drive power is too small	Select a higher power drive
E003	Over-current in constant speed operation	Acceleration /Deceleration time is too short	Prolong Acceleration/ Deceleration time
		Sudden change of load or Abnormal load	Check the load
		Low AC supply voltage	Check the AC supply voltage
		Coded disc breaks down, when PG is running	Check the coded disc and the connection
		Drive power is too small	Select a higher power drive
E004	Over voltage during acceleration	Abnormal AC supply voltage	Check the power supply
		Too short acceleration time	Prolong accerlation time
E005	Over voltage during deceleration	Too short Deceleration time (with reference to generated energy)	Prolong the deceleration time
		The load generates energy or the load inertial is too big	Connect suitable braking kit
E006	Over voltage in constant-speed operating process	Wrong ASR parameters, when drive run in the vector control mode	Refer to A5. ASR parameter seting
		Acceleration /Deceleration time is too short	Prolong Acceleration/ Deceleration time
		Abnormal AC supply voltage	Check the power supply
		Abnormal change of input voltage	Install input reactor
		Too big load inertia	Connect suitable braking kit

Fault code	Fault categories	Possible reasons for fault	Actions
E007	Drive's control power supply over voltage	Abnormal AC supply voltage	Check the AC supply voltage or seek service
E008	Input phase loss	Any of phase R, S and T cannot be detected	Check the wiring and installation Check the AC supply voltage
E009	Output phase loss	Any of Phase U, V and W cannot be detected	Check the drive's output wiring Check the cable and the motor
E010	Protections of IGBT act	Short-circuit among 3-phase output or line-to-ground short circuit	Rewiring, please make sure the insulation of motor is good
		Instantaneous over-current	Refer to E001~E003
		Vent is obstructed or fan does not work	Clean the vent or replace the fan
		Over-temperature	Lower the ambient temperature
		Wires or connectors of control board are loose	Check and rewiring
		Current waveform distorted due to output phase loss	Check the wiring
		Auxiliary power supply is damaged or IGBT driving voltage is too low	Seek service
		Short-circuit of IGBT bridge	Seek service
		Control board is abnormal	Seek service
E011	IGBT module's heatsink overheat	Ambient over-temperature	Lower the ambient temperature
		Vent is obstructed	Clean the vent
		Fan does not work	Replace the fan
		IGBT module is abnormal	Seek service
E012	Rectifier's heatsink overheat	Ambient over-temperature	Lower the ambient temperature
		Vent is obstructed	Clean the vent
		Fan does not work	Replace the fan
E013	Drive overload	Parameters of motor are wrong	Auto-tune the parameters of motor
		Too heavy load	Select the drive with bigger power
		DC injection braking current is too big	Reduce the DC injection braking current and prolong

Fault code	Fault categories	Possible reasons for fault	Actions
			the braking time
		Too short acceleration time	Prolong acceleration time
		Low AC supply voltage	Check the AC supply voltage
		Improper V/F curve	Adjust V/F curve or torque boost value
E014	Motor over-load	Improper motor's overload protection threshold	Modify the motor's overload protection threshold.
		Motor is locked or load suddenly become too big	Check the load
		Common motor has operated with heavy load at low speed for a long time.	Use a special motor if the motor is required to operate for a long time.
		Low AC supply voltage	Check the AC supply voltage
		Improper V/F curve	Set V/F curve and torque boost value correctly
E015	external equipment fails	Terminal used for stopping the drive in emergent status is closed	Disconnect the terminal if the external fault is cleared
E016	EEPROM R/W fault	R/W fault of control parameters	Press STOP/RST to reset, seek service
E017	reserved	reserved	reserved
E018	Contactor not closed	Low AC supply voltage	Check the AC supply voltage
		Contactor damaged	Replace the contactor in main circuit and seek service
		Soft start resistor is damaged	Replace the soft start resistor and seek service
		Control circuit is damaged	Seek service
		Input phase loss	Check the wiring of R, S, T.
E019	Current detection circuit fails	Wires or connectors of control board are loose	Check and re-wire
		Auxiliary power supply is damaged	Seek service
		Hall sensor is damaged	Seek service
		Amplifying circuit is abnormal	Seek service
E020	System interference	Terrible interference	Press **STOP/RST** key to reset or add a power filter in front of power supply input
		DSP in control board read/write by mistake	Press **STOP/RST** key or seek service.
E023	Parameter copy error	Panel's parameters are not complete or the version of the parameters are not the same as that of the main control board	Update the panel's parameters and version again. First set b4.04 to 1 to upload the parameters and then set b4.04 to 2 or 3 to download

			the parameters.
		Panel's EEPROM is damaged	Seek service
E024	Auto-tuning fault	Improper settings of parameters on the nameplate	Set the parameters correctly according to the nameplate
		Prohibiting contrarotation Auto-tuning during rollback	Cancel prohibiting rollback
		Overtime of auto-tuning	Check the motor's wiring
			Check the set value of A0.10(upper limiting frequency), make sure if it is lower than the rated frequency or not
E025	PG fails	With PG vector control, the signal of encoder is lost	Check the wiring of the encoder, and re-wiring
E026	The load of drive is lost	The load is lost or reduced	Check the situation of the load
E027	Brake unit fault	Brake tube is broken	Seek service
E028~E032	Reserved		
E033	Short circuit to the ground	Output terminal of VFD is short circuit to the ground	Check the reason
		Poor insulation of the motor	The motor insulation check whether meet requirements. Improving the performance of the motor insulation.
		The cable is too long between motor and VFD	Add a reactor or a filter at output terminal of VFD
E034	The speed is over the limit of deviation	Without auto-tuning the parameters of motor when using vector control	auto-tuning the parameters
		The VFD does not match the power of this motor	Change the VFD or motor
		Inappropriate parameters setting for ASR	Change the parameter code in Group A5
E035~E039	Reserved		
E040	SPI-IO error	Circuit of the Input terminal is broken	Seek service

Note:

The short circuit of the brake resistance can lead to the damage of brake unit fault.

Table 7-2 Abnormal phenomena and handling methods

Phenomena	Conditions	Possible reasons of fault	Actions
No response of operation panel	Part of the keys or all the keys are disabled	Panel is locked up	In stopping status, first press ENTER and hold on, then press ∨ 3 times continuously to unlock the panel
			Power-on the drive after it shuts down completely
		Panel's cables are not well connected.	Check the wiring
		Panel's keys are damaged.	Replace operation panel or seek service
Settings of parameters cannot be changed	Operating status cannot be changed	Parameters are not allowed changing during operation	Change the parameters at STOP status
	Part of parameters Can not be changed	b4.02 is set to 1 or 2	Set b4.02 to 0
		Parameters are actually detected, not allowed changing	Do not try to change these parameters, users are not allowed to changed these
	MENU is disabled	Panel is locked up	See "No response of operation panel"
	Parameter not displayed when pressing MENU. Instead, "0.0.0.0." is displayed	User's password is required	Input correct user's password
			Seek service
The drive stops during operating process	The drive stops and its "RUN" LED is off, while there is no "STOP" command	Fault alarm occurs	Find the fault reason and reset the drive
		AC supply is interrupted	Check the AC supply condition
		Control mode is changed	Check the setting of relevant parameters
		Logic of control terminal changes	Check the settings of A6.13
	Motor stops when there is no stopping command, while the drive's "RUN" LED illuminates and operates at zero frequency	Auto-reset upon a fault	Check the setting of auto-reset
		Stopping command is input from external terminal	Check the setting of this external terminal
		Preset frequency is 0	Check the frequency setting
		Start frequency is larger than preset frequency	Check the start frequency
		Skip frequency is set incorrectly	Check the setting of skip frequency
		Enable " Ban forwarding" when run forward	Check the set of terminal function
		Enable "Ban reversing" when run reversely	Check the set of terminal function
The drive does not work	The drive does not work and its "RUN" LED is off	Terminal used for coasting to stop is enabled	Check the terminal used for coasting to stop
		Terminal used for prohibiting	Check the terminal used for prohibiting

Phenomena	Conditions	Possible reasons of fault	Actions
	when the “RUN” key is pressed.	running of the drive is enabled.	running of the drive is enabled.
		Terminal used for stopping the drive is enabled	Check the terminal used for stopping the drive
		In 3-wire control mode, the terminal used to control the 3-wire operation is not closed.	Set and close the terminal
		Fault alarm occurs C	Clear the fault
		Positive and negative logic of input terminal are not set correctly	Check the setting of A6.13
“P.oFF” is reported when the drive begin to run immediately after power-on.	Transistor or contactor disconnected and overload	Since the transistor or contactor is disconnected, the bus voltage drops at heavy load, therefore, the drive displays P.Off, not E018 message	Run the drive until the transistor or contactor is connected.

Chapter 8 Maintenance

Many factors such as ambient temperature, humidity, dust, vibration, internal component aging, wear and tear will give rise to the occurrence of potential faults. Therefore, it is necessary to conduct routine maintenance to the drives.

Notes:

As safety precautions, before carrying out check and maintenance of the drive, please ensure that :

The drive has been switched off;

The charging LED lamp inside the drive is off.

Use a volt-meter to test the voltage between terminals (+) and (-) and the voltage should be below 36V.

8.1 Daily Maintenance

The drive must be operated in the environment specified in the Section 2.1. Besides, some unexpected accidents may occur during operation. You should maintain the drive conditions according to the table below, record the operation data, and find out problems in the early stage.

Table 8-1 Daily checking items

Items	Instructions			Criterion
	Items	Cycle	Checking methods	
Operating environment	Temperature and humidity	Any time	Thermometer and hygrometer	-10℃~+40℃, derating at 40℃ ~50℃
	Dust and water dripping		Visual inspection	
	Gas		olfactometry	
Drive	Vibration and heating	Any time	Touch the case	Stable vibration and proper temperature
	Noise		Listen	No abnormal sound
Motor	Heating	Any time	Touch by hand	No overheat
	Noise		Listen	Low and regular noise
Operating status parameters	Output current	Any time	Current meter	Within rated range
	Output voltage		Volt-meter	Within rated range
	Internal temperature		Thermometer	Temperature rise is less than 35℃

8.2 Periodical Maintenance

Customer should check the drive every 3 months or 6 months according to the actual environment.

Notes:

1. Only trained personnel can dismantle the drive to replace or repair components;
2. Don't leave metal parts like screws or pads inside the drive; otherwise the equipment may be damaged.

General Inspection:

1. Check whether the screws of control terminals are loose. If so, tighten them with a screwdriver;
2. Check whether the main circuit terminals are properly connected; whether the mains cables are over heated;
3. Check whether the power cables and control cables are damaged, check especially for any wear on the cable tube;
4. Check whether the insulating tapes around the cable lugs are stripped;
5. Clean the dust on PCBs and air ducts with a vacuum cleaner;
6. For drives that have been stored for a long time, it must be powered on every 2 years. When supplying AC power to the drive, use a voltage regulator to raise the input voltage to rated input voltage gradually. The drive should be powered for 5 hours without load.
7. Before performing insulation tests, all main circuit input/output terminals should be short-circuited with conductors. Then proceed insulation test to the ground. Insulation test of single main circuit terminal to ground is forbidden; otherwise the drive might be damaged.
Please use a 500V Mega-Ohm-Meter.
8. Before the insulation test of the motor, disconnect the motor from the drive to avoid damaging it.

Note:
Dielectric Strength test of the drive has already been conducted in the factory. Do not do the test again, otherwise, the internal components might be damaged.
Using different component to substitute the original component may damage the driver.

8.3 Replacing Wearing Parts

The components that are easily damaged are: cooling fan and electrolytic capacitors of filters. Their lifetime depends largely on their application environment and preservation. Normally, lifetime is shown in following table.

Table 8-2 Lifetime of components

Components	Lifetime
Fan	3~40,000 hours
electrolytic capacitor	4~50,000 hours
Relay	About 100,000 times

You can decide the time when the components should be replaced according to their service time.

1.Cooling fan
Possible cause of damages: wear of the bearing, aging of the fan vanes.
Criteria:After the drive is switched off, check whether abnormal conditions such as crack exists on fan vanes and other parts. When the drive is switched on, check whether drive running is normal, and check whether there is any abnormal vibration.
2. Electrolytic capacitors
Possible cause of damages: high ambient temperature, aging of electrolyte and large pulse current caused by rapid changing loads.
Criteria: Check if there is any leakage of liquids. Check if the safety valve protrudes. Measure static capacitance and insulation resistance.
3.Relay
Possible cause of damages: corrosion, frequent-switching.
Criteria: Check whether the relay has open and shut failure.

8.4 Storage

The following points must be followed for the temporary and long-term storage of drive:

1. Store in locations free of high temperature, humidity, dust, metal powder, and with good ventilation.

2. Long-term storage will cause the deterioration of electrolytic capacitors. Therefore, the drive must be switched on for a test within 2 years at least for 5 hours. The input voltage must be boosted gradually by the voltage regulator to the rated value.

Chapter 9 List of Parameters

FV100 series VFD's parameters are organized in groups. Each group has several parameters that are identified by "Group No.+ Function Code. There are AX,YZ letters in other content in this manual,it indicate the YZ function code in group X.For example,"A6.08" belongs to group A6 and its function code is 8.

The parameter descriptions are listed in the tables below.

Table 9-1 Descriptions of Function Code Parameter Structure Table

No.	Name	Description
1	Function code	The number of function code
2	Name	The name of function code
3	Setting range	The setting range of parameters.
4	Unit	The minimum unit of the setting value of parameters.
5	Factory setting	The setting value of parameters after the product is delivered
6	Modification	The "modification" column in the parameter table means whether the parameter can be modified. "○"Denotes the parameters can be modified during operation or at STOP state; "×": Denotes the parameters cannot be modified during operating; "* ": Denotes the parameters are actually detected and cannot be revised; "—": Denotes the parameters are defaulted by factory and cannot be modified ; （When you try to modify some parameters, the system will check their modification property automatically to avoid mis-modification.）

Note:

1. Parameter settings are expressed in decimal (DEC) and hexadecimal (HEX). If the parameter is expressed in hexadecimal, the bits are independent to each other.The value of the bits can be 0~F.

2. "Factory settings" means the default value of the parameter. When the parameters are initialized, they will resume to the factory settings. But the actual detected or recorded parameters cannot be initialized;

⚠ Note	It is defaulted that no parameters except A0.03 are allowed changing. If you need change them, please first set b4.02(parameter write-in protection) from 1 to 0.

Table 9-2 List of Parameters

Function code	Name	Descriptions	Unit	Factory setting	Modif.	Setting range
Group A0：Basic operating parameters						
A0.00	User password	0：No password protection. Others:Password protection.	1	0	○	0~FFFF
A0.01	Control mode	0:Vector control without PG 1:Vector control with PG	1	2	×	0~2

Function code	Name	Descriptions	Unit	Factory setting	Modif.	Setting range
		2: V/F control				
A0.02	Main reference frequency selector	0：Digital setting 1：AI1 2：AI2 3：AI3 4：Set via DI terminal(PULSE) 5：Reserved	1	0	○	0~5
A0.03	Set the operating frequency in digital mode	A0.11~A0.10	0.01Hz	50.00	○	0~30000
A0.04	Methods of inputting operating commands	0：Panel control 1：Terminal control 2：Communication control	1	1	○	0~2
A0.05	Set running direction	0：Forward 1：Reverse	1	0	○	0~1
A0.06	Acc time 1	0.0~6000.0	0.1S	2KW or below:6.0S 30KW~45KW:20.0S 45KW or above:30.0S	○	0~60000
A0.07	Dec time 1	0.0~6000.0	0.1S	2KW or below:6.0S 30KW~45KW:20.0S 45KW or above:30.0S	○	0~60000
A0.08	Max. output frequency	upper limit of frequency A0.11~300.00Hz	0.01Hz	50.00	×	0~30000
A0.09	Max. output voltage	0~480	1V	VFD’s rated values	×	0~480
A0.10	Upper limit of frequency	A0.11~A0.10	0.01Hz	50.00	○	0~30000
A0.11	Lower limit of frequency	0.00~A0.11	0.01Hz	0.00	○	0~30000
A0.12	Basic operating	0.00~Max.output frequency	0.01Hz	50.00	○	0~30000

Function code	Name	Descriptions	Unit	Factory setting	Modif.	Setting range
	frequency	A0.08				
A0.13	Torque boost	0.0%（Auto），0.1%~30.0%	0.1%	0.0%	○	0~300
Group A1：Start and stop parameters						
A1.00	Starting mode	0 Start from the starting frequency 1 Brake first and then start 2 Start on the fly(including direction judgement), start at starting frequency	1	0	×	0~2
A1.01	Starting frequency	0.00~60.00Hz	0.01Hz	0.00Hz	○	0~6000
A1.02	Holding time of starting frequency	0.00~10.00s	0.01s	0.00s	○	0~1000
A1.03	DC injection braking current at start	0.0%~100.0% drive’s rated current	0.1%	0.0％	○	0~1000
A1.04	DC injection braking time at start	0.00（No action） 0.01~30.00s	0.01s	0.00s	○	0~3000
A1.05	Stopping mode	0：Dec-to-stop 1：Coast-to-stop 2 ： Dec-to-stop+DC injection braking	1	0	×	0~2
A1.06	DC injection braking initial frequency at stop	0.00~60.00Hz	0.01Hz	0.00Hz	○	0~6000
A1.07	Injection braking waiting time at stop	0.00~10.00s	0.01s	0.00s	○	0~1000
A1.08	DC injection braking current at stop	0.0%~100.0% drive’s rated current	0.1%	0.0%	○	0~1000
A1.09	DC injection braking time at stop	0.0（No action） 0.01~30.00s	0.01s	0.00s	○	0~3000
A1.10	Restart after power failure	0:Disable 1:Enable	1	0	×	0~1

Function code	Name	Descriptions	Unit	Factory setting	Modif.	Setting range
A1.11	Delay time for restart after power	0.0~10.0s	0.1s	0.0s	○	0~100
	failure					
A1.12	Anti-reverse running function	0：Disabled 1：Enabled (It will operate at zero frequency when input a reverse command)	1	0	×	0~1
A1.13	Delay time of run reverse/forward	0.00~360.00s	0.01s	0.00s	○	0~36000
A1.14	Switch mode of run reverse/forward （Reserved）	0: Switch when pass 0Hz 1: Switch when pass starting frequency	1	0	×	0~1
A1.15	Detecting frequency of stop	0.00~150.00Hz	0.01Hz	0.10Hz	×	0~15000
A1.16	Action voltage of braking unit	650~750V	1	720	×	650~750
A1.17	Dynamic braking	0：Disable 1：Enable	1	0	×	0~1
A1.18	Ratio of working time of braking unit to drive’s total working time	0.0~100.0％	0.1％	80.0％	○	0~1000
A1.19		0: Current finding mode 1: Vector tracking mode 2: Depend on the parameter A1.00	1	0	×	0~2
Group A2：Frequency setting						
A2.00	Auxiliary reference frequency selector	0: No auxiliary reference frequency 1: AI1 2: AI2 3: AI3 4: Set by DI (PULSE）terminal 5: output by PID process	1	0	○	0~5
A2.01	Main and auxiliary	0: +	1	0	○	0~3

Function code	Name	Descriptions	Unit	Factory setting	Modif.	Setting range
	reference frequency calculation	1：- 2： MAX（Main reference，Auxiliary reference） 3： MIN（Main reference，Auxiliary reference）				
A2.02	UP/DN rate	0.01~99.99Hz/s	0.01	1.00	○	1~9999
A2.03	UP/DN regulating control	Unit's place of LED: 0: Save reference frequency upon power outage 1: Not save reference frequency upon power outage. Ten's place of LED: 0: Hold reference frequency at stop 1: Clear reference frequency at stop Hundred's place of LED: 0: UP/DN integral time valid 1: UP/DN speed value	1	000	○	0~111H
A2.04	Jog operating frequency	0.10~50.00Hz	0.01Hz	5.00	○	10~5000
A2.05	Interval of Jog operation	0.0~100.0s	0.1s	0.0	○	0~1000
A2.06	Skip frequency 1	0.00~300.00Hz	0.01Hz	0.00	×	0~30000
A2.07	Range of skip frequency 1	0.00~30.00Hz	0.01Hz	0.00	×	0~3000
A2.08	Skip frequency 2	0.00~300.00Hz	0.01Hz	0.00	×	0~30000
A2.09	Range of skip frequency	0.00~30.00Hz	0.01Hz	0.00	×	0~3000
A2.10	Skip frequency 3	0.00~300.00Hz	0.01Hz	0.00	×	0~30000
A2.11	Range of skip frequency 3	0.00~30.00Hz	0.01Hz	0.00	×	0~3000
Group A3:Setting curve						
A3.00	Reference frequency curve selection	LED unit's place: AI1 curve selection 0: Curve 1	1	0000	○	0~3333H

Function code	Name	Descriptions	Unit	Factory setting	Modif.	Setting range
		1：Curve 2 2：Curve 3 3：Curve 4 LED ten’s place: AI2 curve selection 0：Curve 1 1：Curve 2 2：Curve 3 3：Curve 4 LED hundred’s place: AI3 curve selection 0：Curve 1 1：Curve 2 2：Curve 3 3：Curve 4 LED thousand’s place:Pulse input curve selection 0：Curve 1 1：Curve 2 2：Curve 3 3：Curve 4				
A3.01	Max reference of curve 1	A3.03~110.00%	0.01%	100.00%	○	0~11000
A3.02	Actual value corresponding to the Max reference of curve 1	Reference frequency： 0.0~100.00%Fmax Torque：0.0~300.00%Te	0.01%	100.00%	○	0~10000
A3.03	Min reference of curve 1	0.0%~A3.01	0.01%	0.00%	○	0~11000
A3.04	Actual value corresponding to the Min reference of curve 1	The same as A3.02	0.01%	0.00%	○	0~10000
A3.05	Max reference of curve 2	A3.07~110.00%	0.01%	100.00%	○	0~11000

Function code	Name	Descriptions	Unit	Factory setting	Modif.	Setting range
A3.06	Actual value corresponding to the Max reference of curve 2	The same as A3.02	0.01%	100.00%	○	0~10000
A3.07	Min reference of curve 2	0.0%~A3.05	0.01%	0.00%	○	0~11000
A3.08	Actual value corresponding to the Min reference of curve 2	The same as A3.02	0.01%	0.00%	○	0~10000
A3.09	Max reference of curve 3	A3.11~110.00%	0.01%	100.00%	○	0~11000
A3.10	Actual value corresponding to the Max reference of curve 3	The same as A3.02	0.01%	100.00%	○	0~10000
A3.11	Min reference of curve 3	0.0%~A3.09	0.01%	0.00%	○	0~11000
A3.12	Actual value corresponding to the Min reference of curve 3	The same as A3.02	0.01%	0.00%	○	0~10000
A3.13	Max reference of curve 4	A3.15~110.00%	0.01%	100.00%	○	0~11000
A3.14	Actual value corresponding to the Max reference of curve 4	The same as A3.02	0.01%	100.00%	○	0~10000
A3.15	Reference of inflection point 2 of curve 4	A3.17~A3.13	0.01%	100.00%	○	0~11000
A3.16	Actual value corresponding to the Min reference of inflection point 2 of curve 4	The same as A3.02	0.01%	100.00%	○	0~10000
A3.17	Reference of	A3.19~A3.15	0.01%	0.00%	○	0~11000

Function code	Name	Descriptions	Unit	Factory setting	Modif.	Setting range
	inflection point 1 of curve 4					
A3.18	Actual value corresponding to the Min reference of inflection point 1 of curve 4	The same as A3.02	0.01%	0.00%	○	0~10000
A3.19	Min reference of curve 4	0.0%~A3.17	0.01%	0.00%	○	0~11000
A3.20	Actual value corresponding to the Min reference of curve 4	The same as A3.02	0.01%	0.00%	○	0~10000
A3.21	Characteristic selection of curve	LED unit's place: Characteristic choice of curve 1 0: set 0 Hz when frequency < 0 Hz 1: symmetrical about origin 2 absolute value LED unit's place: Characteristic choice of curve 2 0: set 0 Hz when frequency < 0 Hz 1: symmetrical about origin 2 absolute value LED hundred's place: Characteristic choice of curve 3 0: set 0 Hz when frequency < 0 Hz 1: symmetrical about origin 2 absolute value LED thousand's place: Characteristic choice of curve 4 0: set 0 Hz when frequency < 0 Hz 1: symmetrical about origin 2 absolute value	1	0000	○	0000 ～ 2222H 【0000】

Function code	Name	Descriptions	Unit	Factory setting	Modif.	Setting range
Group A4：Acc/Dec parameters						
A4.00	Acc/Dec mode	0：Linear Acc/Dec 1：S curve	1	0	×	0~1
A4.01	Acc time 2	0.0~6000.0	0.1S	20.0S	○	0~60000
A4.02	Dec time 2	0.0~6000.0	0.1S	20.0S	○	0~60000
A4.03	Acc time 3	0.0~6000.0	0.1S	20.0S	○	0~60000
A4.04	Dec time 3	0.0~6000.0	0.1S	20.0S	○	0~60000
A4.05	Acc time 4	0.0~6000.0	0.1S	20.0S	○	0~60000
A4.06	Dec time 4	0.0~6000.0	0.1S	20.0S	○	0~60000
A4.07	S curve acceleration starting time	10.0%~50.0%(Acc time) A4.07+ A4.08≤90%	0.1%	20.0%	○	100~500
A4.08	S curve acceleration ending time	10.0%~70.0%(Acc time) A4.07+ A4.08≤90%	0.1%	20.0%	○	100~700
A4.09	S curve deceleration starting time	10.0%~50.0%(Dec time) A4.09+ A4.10≤90%	0.1%	20.0%	○	100~500
A4.10	S curve deceleration ending time	10.0%~70.0%(Dec time) A4.09+ A4.10≤90%	0.1%	20.0%	○	100~700
Group A5：Control parameters						
A5.00	Speed/torque control mode	0：Speed control mode 1：Torque control mode	1	0	×	0~1
A5.01	ASR1-P	0.1~200.0	0.1	20.0	○	1~2000
A5.02	ASR1-I	0.000~10.000S	0.001S	0.200s	○	0~10000
A5.03	ASR1 output filter	0~8(Corresponding to 0~2^8/10ms）	1	0	○	0~8
A5.04	ASR2-P	0.1~200.0	0.1	20.0	○	1~2000
A5.05	ASR2-I	0.000~10.000S	0.001S	0.200s	○	0~10000
A5.06	ASR2 output filter	0~8（Corresponding to 0~2^8/12.5ms）	1	0	○	0~8
A5.07	ASR1/2 switching frequency	0.0%~100.0%	0.1	10.0％	○	0~1000
A5.08	Maximum speed	0.0%~+100.0%	0.1％	100.0％	○	0~1000

Function code	Name	Descriptions	Unit	Factory setting	Modif.	Setting range
	limit for forward running when torque control					
A5.09	Maximum speed limit for reverse running when torque control	0.0%~+100.0%	0.1％	100.0％	○	0~1000
A5.10	Driving torque limit	0.0%~+300.0%	0.1%	180.0%	○	0~3000
A5.11	Braking torque limit	0.0%~+300.0%	0.1%	180.0%	○	0~3000
A5.12	Reference torque selection	0：Digital setting 1：AI1 2：AI2 3：AI3 4：Pulse DI terminal setting	1	0	×	0~4
A5.13	Digital reference torque	-300.0%~+300.0%	0.1%	0.0%	○	0~6000
A5.14	Speed→Torque switching point	0%~+300.0% Initial torque	0.1%	100.0%	×	0~3000
A5.15	Speed/torque switching delay time	0~1000mS	1	0	×	0~1000
A5.16	Reference torque filtering time	0~65535mS	1mS	0	×	0~65535
A5.17	ACR-P	1~5000	1	1000	○	1~5000
A5.18	ACR-I	0.5~100.0mS	0.1	8.0	○	5~1000
Group A6：Control terminals parameters						
A6.00~A6.06	Multi-function terminal X1~X7	0：No function 1：Forward 2：Reverse 3：Forward jog operation 4：Reverse jog operation 5：3-wire operation control 6：External RESET signal input	1	0	×	0~47

Function code	Name	Descriptions	Unit	Factory setting	Modif.	Setting range
		7：External fault signal input 8：External interrupt signal input 9：Drive operation prohibit 10：External stop command 11：DC injection braking command 12：Coast to stop 13：Frequency ramp up (UP) 14：Frequency ramp down (DN) 15：Switch to panel control 16：Switch to terminal control 17：Switch to communication control mode 18：Main reference frequency via AI1 19：Main reference frequency via AI2 20：Main reference frequency via AI3 21：Main reference frequency via DI 22：Auxiliary reference frequency invalid 23：Auxiliary reference frequency via AI1 (Reserved) 24：Auxiliary reference frequency via AI2 (Reserved) 25：Auxiliary reference frequency via AI3 (Reserved) 26：Auxiliary reference frequency via DI (Reserved) 27：Preset frequency 1				

Function code	Name	Descriptions	Unit	Factory setting	Modif.	Setting range
		28：Preset frequency 2 29：Preset frequency 3 30：Preset frequency 4 31：Acc/Dec time 1 32：Acc/Dec time 2 33：Multiple close-loop reference selection 1 34：Multiple close-loop reference selection 2 35：Multiple close-loop reference selection 3 36：Multiple close-loop reference selection 4 37：Forward prohibit 38：Reverse prohibit 39：Acc/Dec prohibit 40：Process close-loop prohibit 41：Speed/torque control switching terminal 42：Main frequency switch to digital setting 43：PLC pause 44：PLC prohibit 45：PLC stop memory clear 46：Swing input 47：Swing reset Others:Reserved				
A6.08	Terminal filter	0~500ms	1	10	○	0~500
A6.09	Terminal control mode selection	0：2-wire operating mode 1 1：2-wire operating mode 2 2：3-wire operating mode 1 3：3-wire operation mode 2	1	0	×	0~3
A6.10	Max. frequency of input pulse	0.1~100.0(Max.100k) Only valid when X7 is defined as	0.1kHz	10.0	○	1~1000

Function code	Name	Descriptions	Unit	Factory setting	Modif.	Setting range
		pulse input.				
A6.11	Center point of pulse setting selection	0：No center point 1：Center point mode 1,the center point is（A6.10）/2.It is positive when frequency less than center point. 2：Center point mode 2.The center point is (A6.10)/2.It is negative when frequency less then center point.	1	0	○	0~2
A6.12	Filter of pulse input	0.00~10.00s	0.01s	0.05	○	0~1000
A6.13	Input terminal's positive and negative logic	Binary setting 0：Positive logic: Terminal Xi is enabled if it is connected to corresponding common terminal, and disabled if it is disconnected. 1：Negative logic: Terminal Xi is disabled if it is connected to corresponding common terminal, and enabled is it is disconnected. Unit's place of LED:BIT0~BIT3：X1~X4 Ten's place of LED:BIT0~BIT2：X5~X7	1	00	○	0~FFH
6.14	Bi-direction pen-collector output terminal Y1	0: Running signal(RUN) 1: Frequency arriving signal(FAR) 2: Frequency detection threshold (FDT1) 3: Frequency detection threshold (FDT2) 4: Overload detection signal(OL) 5: Low voltage signal(LU) 6: External fault stop signal(EXT) 7: Frequency high limit(FHL)	1	0	×	0~20

Function code	Name	Descriptions	Unit	Factory setting	Modif.	Setting range
		8: Frequency low limit(FLL) 9: Zero-speed running 10: Terminal X1 (Reserved) 11: Terminal X2(Reserved) 12: PLC running step complete signal 13: PLC running cycle complete signal 14: Swing limit 15: Drive ready (RDY) 16: Drive fault 17: Switching signal of host 18: Reserved 19: Torque limiting 20: Drive running forward/reverse Others: Reserved				
A6.15		Reserved	1	1	×	0~20
A6.16	Output functions of relay R1	The same as A6.14	1	16	×	0~20
A6.17		Reserved	1	15	×	0~20
A6.18	Output terminal's positive and negative logic	Binary setting: 0: Terminal is enabled if it is connected to corresponding common terminal, and disabled if it is disconnected. 1: Terminal is disabled if it is connected to corresponding common terminal, and enabled is it is disconnected. Unit's place of LED： BIT0~BIT3：Y1、R1 Ten's place of LED： BIT0：Y2	1	0	○	0~1FH
A6.19	Frequency arriving signal (FAR)	0.00~300.00Hz	0.01Hz	2.50Hz	○	0~30000

Function code	Name	Descriptions	Unit	Factory setting	Modif.	Setting range
A6.20	FDT1 level	0.00~300.00Hz	0.01Hz	50.00Hz	○	0~30000
A6.21	FDT1 lag	0.00~300.00Hz	0.01Hz	1.00Hz	○	0~30000
A6.22	FDT2 level	0.00~300.00Hz	0.01Hz	25.00Hz	○	0~30000
A6.23	FDT2 lag	0.00~300.00Hz	0.01Hz	1.00Hz	○	0~30000
A6.24	Virtual terminal setting	Binary setting 0：Disable 1：Enable Unit’s place of LED： BIT0~BIT3：X1~X4 Ten’s place of LED： BIT0~BIT2：X5~X7	1	00	○	0~FFH
A6.25	Y2 terminal output	0~50：Y2 is used as Y terminal output. 51~88：Y2 function 0:Running signal(RUN) 1:frequency arriving signal(FAR) 2:frequency detection threshold (FDT1) 3:frequency detection threshold (FDT2) 4:overload signal(OL) 5:low voltage signal(LU) 6:external fault signal(EXT) 7:frequency high limit(FHL) 8:frequency low limit(FLL) 9:zero-speed running 10：Terminal X1(Reserved) 11：Terminal X2(Reserved) 12：PLC running step complete signal 13：PLC running cycle complete signal 14：Swing limit 15：Drive ready (RDY) 16：Drive fault	1	0	○	0~88

Function code	Name	Descriptions	Unit	Factory setting	Modif.	Setting range
		17：:Switching signal of host 18：Reserved 19：Torque limiting 20:Drive running forward/reverse 21~50：Reserved 51：Output frequency（0~ Max. output frequency） 52：Preset frequency（0~ Max. output frequency） 53：Preset frequency (After Acc/Dec)（0~ Max. output frequency） 54：Motor speed（0~ Max. speed） 55：Output current（0~2*Iei） 56：Output current（0~2*Iem） 57：Output torque（0~3*Tem） 58：Output power（0~2*Pe） 59：Output voltage（0~1.2*Ve） 60：Bus voltage（0~800V） 61：AI1 62：AI2 63：AI3 64：DI pulse input 65：Percentage of host（0~4095） 66~88：Reserved				
A6.26	Max. output pulse frequency	0.1~100.0(Max.100.0k)	0.1kHz	10.0	○	1~1000
A6.27	Center point of pulse output selection	0：No center point 1：Center point mode 1,the center point is（A6.26）/2.It is positive when frequency less than center point. 2：Center point mode 2.The center point is (A6.26)/2.It is negative	1	0	○	0~2

Function code	Name	Descriptions	Unit	Factory setting	Modif.	Setting range
		when frequency less then center point.				
A6.28	Functions of terminal AO1	0：No function 1：Output frequency（0~ Max. output frequency） 2：Preset frequency（0~ Max. output frequency） 3：Preset frequency（After Acc/Dec）（0~ Max. output frequency） 4：Motor speed（0~ Max. speed） 5：Output current（0~2*Iei） 6：Output current（0~2*Iem） 7：Output torque（0~3*Tem） 8：Output power（0~2*Pe） 9：Output voltage（0~1.2*Ve） 10：Bus voltage（0~800V） 11：AI1 12：AI2 13：AI3 14：DI pulse input 15：Percentage of host（0~4095） 16~36：Reserved	1	0	○	0~36
A6.29	Functions of terminal AO2	Same as above.	1	0	○	0~36
A6.30	Gain of AO1	0.0％~200.0%	0.1％	100.0%	○	0~2000
A6.31	Zero offset calibration of AO1	-100.0%~100.0%	0.1%	0.0	○	0~2000
A6.32	Gain of AO2	0.0％~200.0%	0.1％	100.0%	○	0~2000
A6.33	Zero offset calibration of AO2	-100.0%~100.0%	0.1%	0.0	○	0~2000
A6.34	AI1 filter	0.01~10.00s	0.01s	0.05	○	1~1000
A6.35	AI2 filter	0.01~10.00s	0.01s	0.05	○	1~1000

Function code	Name	Descriptions	Unit	Factory setting	Modif.	Setting range
A6.36	AI3 filter	0.01~10.00s	0.01s	0.05	○	1~1000
A6.37	Analog input zero offset calibration	0~1	1	0	○	0~1
A6.38	AI1 gain	0.00%~200%	0.01%	110%	○	1~11000
A6.39	AI2 gain	0.00%~200%	0.01%	110%	○	1~11000
A6.40	AI3 gain	0.00%~200%	0.01%	110%	○	1~11000
Group A7：PG Parameters						
A7.00	PG type	0：ABZ incremental type 1：UVW incremental type 2～3：Reserved.	1	0	○	0~3
A7.01	Number of pulses per revolution of PG	1~10000	1	2048	○	1~10000
A7.02	Direction of PG	0：A phase lead B phase 1：B phase lead A phase	1	0	×	0~1
A7.03	Encoder signal filter number	Unit’s place of LED: 0~9 high-speed filter Ten’s place of LED: 0~9 low-speed filter	1	30H	○	0~99H
A7.04	PG disconnection detecting time	0.0：Disable 0.1~10.0	0.1s	0.0	○	0~100
A7.05	Reduction rate of motor and encoder	0.001~65.535	0.001	1	○	0~65535
Group A8：Fault parameters						
A8.00	Protective action of relay	Unit’s place of LED: Action selection for under-voltage fault indication. 0:Disable 1:Enable Ten’s place of LED: Action selection for auto reset interval fault indication. 0:Disable 1:Enable Hundred’s place of LED: Selection for fault locked	1	0000	×	0~1111H

Function code	Name	Descriptions	Unit	Factory setting	Modif.	Setting range
		function. 0:Disable 1:Enable Thousand's place of LED: Reserved				
A8.01	Fault masking selection 1	Unit's place of LED: Communication fault masking selection Ten's place of LED: Relay fault masking selection Hundred's place of LED: EEPROM fault masking selection Thousand's place of LED: Reserved 0:Disable.Stop when fault happen 1:Disable.Continue operating when fault happen 2:Enable	1	2000	×	0~2222H
A8.02	Fault masking selection 2	Unit's place of LED: Open phase fault masking selection for input Ten's place of LED: Open phase fault masking selection for output hundred's place of LED: fault masking selection for over limit of deviation of speed thousand's place of LED: fault masking selection for module's heatsink overheat 0:Disable.Stop when fault happen 1:Disable.Continue operating when fault happen 2:Enable	1	00	×	0~22H
A8.03	Motor overload protection mode	0: Disabled 1:Common mode (with low speed	1	1	×	0~2

Function code	Name	Descriptions	Unit	Factory setting	Modif.	Setting range
	selection	compensation) 2: Variable frequency motor (without low speed compensation)				
A8.04	Auto reset times	0：No function 1~100：Auto reset times Note: The IGBT protection (E010) and external equipment fault (E015) cannot be reset automatically.	1	0	×	0~100
A8.05	Reset interval	2.0~20.0s/time	0.1s	5.0s	×	20~200
A8.06	Fault locking function selection.	0:Disable. 1:Enable.	1	0	×	0~1
Group b0:Motor parameters						
b0.00	Rated power	0.4~999.9KW	0.1	0	×	4~9999
b0.01	Rated voltage	0~ rated voltage of drive	1	0	×	0~999
b0.02	Rated current	0.1~999.9A	0.1A	Dependent on drive's model	×	1~9999
b0.03	Rated frequency	1.00~300.00Hz	0.01Hz	Dependent on drive's model	×	100~30000
b0.04	Number of polarities of motor	2~24	2	4	×	2~24
b0.05	Rated speed	0~60000RPM	1RPM	1440RPM	×	0~60000
b0.06	Resistance of stator %R1	0.00%~50.00%	0.01%	Dependent on drive's model	×	0~5000
b0.07	Leakage inductance %Xl	0.00%~50.00%	0.01%	Dependent on drive's model	×	0~5000
b0.08	Resistance of rotor %R2	0.00%~50.00%	0.01%	Dependent on drive's model	×	0~5000
b0.09	Exciting inductance %Xm	0.0%~2000.0%	0.1%	Dependent on drive's model	×	0~20000

Function code	Name	Descriptions	Unit	Factory setting	Modif.	Setting range
b0.10	Current without load I0	0.1~999.9A	0.1A	Dependent on drive's model	×	1~9999
b0.11	Auto-tuning	0: Auto-tuning is disabled 1: Stationary auto-tuning (Start auto-tuning to a standstill motor) 2: Rotating auto-tuning 3:Reserved.	1	0	×	0~3
b0.12	Motor's overload protection coefficient	20.0%~110.0%	0.1%	100.0%	×	200~1100
b0.13	Oscillation inhibition coefficient	0~255	1	10	○	0~255
Group b1:V/F parameters						
b1.00	V/F curve setting	0：V/F curve is defined by user 1：2-order curve 2：1.7-order curve 3：1.2-order curve	1	0	×	0~3
b1.01	V/F frequency value F3	B1.03~A0.08	0.01Hz	0.00Hz	×	0~30000
b1.02	V/F voltage value V3	B1.04~100.0%	0.1%	0.0%	×	0~1000
b1.03	V/F frequency value F2	B1.05 ~B1.01	0.01Hz	0.00Hz	×	0~30000
b1.04	V/F voltage value V2	B1.06~B1.02	0.1%	0.0%	×	0~1000
b1.05	V/F frequency value F1	0.00~B1.03	0.01Hz	0.00Hz	×	0~30000
b1.06	V/F voltage value V1	0~B1.04	0.1%	0.0%	×	0~1000
b1.07	Cut-off point used for manual torque boost	0.0%~50.0%(Corresponding to A0.12)	0.1%	10.0%	○	0~500
b1.08	AVR function	0：Disable 1：Enable all the time	1	2	×	0~2

Function code	Name	Descriptions	Unit	Factory setting	Modif.	Setting range
		2：Disabled in Dec process				
b1.09	VF Output Voltage Selection	0：None 1：AI1 2：AI2 3：Reserved	1	0	×	0~3
b1.10	VF Output Voltage Offset Selection	0：None 1：AI1 2：AI2 3：Reserved	1	0	×	0~3
Group b2:Enhanced parameters						
b2.00	Carrier wave frequency	2.0~15.0KHz	0.1	8.0	○	20~150
b2.01	Auto adjusting of CWF	0：Disable 1：Enable	1	1	○	0~1
b2.02	Voltage adjustment selection	Unit’s place of LED: Over-voltage at stall Selection 0:Disable(When install brake resistor) 1:Enable Ten’s place of LED: Not stop when instantaneous stop function selection 0:Disable 1:Enable(Low voltage compensation) Hundred’s place of LED: Overmodulation selection 0:Disable 1:Enable	1	001	×	0~111H
b2.03	Overvoltage point at stall	120.0%~150.0%Udce	0.1%	140.0%	×	1200~1500
b2.04	Droop control	0.00~10.00Hz	0.00	0.00Hz	○	0~1000
b2.05	Auto current limiting threshold	20.0%~200.0%Ie	0.1%	150.0%	×	200~2000

Function code	Name	Descriptions	Unit	Factory setting	Modif.	Setting range
b2.06	Frequency decrease rate when current limiting	0.00~99.99Hz/s	0.01Hz /S	1.00 Hz/s	○	0~9999
b2.07	Auto current limiting selection	0:Invalid at constant speed 1:Valid at constant speed Note:It is valid all the time at Acc/Dec	1	1	×	0~1
b2.08	Gain of Slip compensation	0.0~300.0%	0.1%	100.0%	○	0~3000
b2.09	Slip compensation limit	0.0~250.0%	0.1%	200.0%	○	0~2500
b2.10	Slip compensation time constant	0.1~25.0s	0.1s	2.0s	○	0~250
b2.11	auto energy-saving function	0：Disable 1：Enable	1	0	×	0~1
b2.12	Frequency decrease rate at voltage compensation	0.00~99.99Hz/s	0.01Hz /S	10.00 Hz/s	○	0~9999
b2.13	Zero-frequency operation threshold	0.00~300.00Hz	0.01Hz	0.50Hz	○	0~30000
b2.14	Zero-frequency Hysteresis （Reserved）	0.00~300.00Hz	0.01Hz	0.00Hz	○	0~30000
b2.15	Fan control	0:Auto operation mode 1:Fan operate continuously when power is on Note: 1.Continue to operate for 3 minutes after power off. 2.This parameter is only valid for drive of power above 7.5KW.	1	0	×	0~1
Group b3:Communication parameter						
b3.00	Communication	Unit’s place of LED:	1	001	×	0~155H

Function code	Name	Descriptions	Unit	Factory setting	Modif.	Setting range
	configuration	Baud rate selection 0：4800BPS 1：9600BPS 2：19200BPS 3：38400BPS 4：115200BPS 5：125000BPS Ten’s place of LED: Data format 0:1-8-2-N format,RTU 1:1-8-1-E format,RTU 2:1-8-1-O format, RTU 3:1-7-2-N format,ASCII 4:1-7-1-E format,ASCII 5:1-7-1-O format,ASCII Hundred’s place of LED: wiring mode 0:Direct connection via cable (RS232/485) 1: MODEM (RS232)				
b3.01	Local address	0~127， 0 is the broadcasting address	1	5	×	0~127
b3.02	Time threshold for judging the communication status	0.0~1000.0S	0.1	0.0S	×	0~10000
b3.03	Delay for responding to control PC	0~1000mS	1	5mS	×	0~1000
Group b4:Keyboard parameters						
b4.00	Key-lock function selection	0: The keys on the operation panel are not locked, and all the keys are usable. 1: The keys on the operation panel are locked, and all the keys are	1	0	○	0~4

Function code	Name	Descriptions	Unit	Factory setting	Modif.	Setting range
		unusable. 2: All the keys except for the multi-functional key are unusable. 3: All the keys except for the SHIFT key are unusable. 4:All the keys except for the RUN AND STOP keys are unusable.				
b4.01	Multi-function key definition	0: Jog function 1: Coast-to-stop 2: Stop in shortest time 3: Switch of input method of operating command 4:Switch forward/reverse.(Save after power failure) 5: Switch forward/reverse.(Not save after power failure)	1	0	○	0~3
b4.02	Parameter protection	0: All parameters are allowed modifying; 1: Only A0.03 and b4.02 can be modified; 2: Only b4.02 can be modified.	1	1	○	0~2
b4.03	Parameter initialization	0: parameter adjustable 1: Clear fault information in memory 2: Restore to factory settings	1	0	×	0~2
b4.04	Parameter copy	0: No action 1: parameters upload 2: parameters download 3: parameters download (except the parameters related to drive type) Note:Not to upload/download drive's parameters.	1	0	×	0~3
b4.05	Display parameters selection	Binary setting: BIT1:Operating 0：No display；1：Display Unit's place of LED:	1	1007H	○	0~7FFFH

Function code	Name	Descriptions	Unit	Factory setting	Modif.	Setting range
		BIT0：Output frequency(No display at stop.Display power frequency at energy feedback mode) BIT1:Setting frequency (Flicking.No display at energy feedback mode) BIT2:Output current(No display at stop.Display power frequency at energy feedback mode) BIT3:Output voltage(No display at stop.Display power frequency at energy feedback mode) Ten's place of LED： BIT0：AI1 BIT1：AI2 BIT2：AI3 BIT3：DI(Terminal status) Hundred's place of LED: BIT0:Output power(No display at stop and energy feedback mode) BIT1:Output torque(No display at stop and energy feedback mode) BIT2:Analog close-loop feedback (%)(No display at feedback mode) BIT3:Analog close-loop setting (%)(Flicking, no display at feedback mode) Thousand's place of LED: BIT0:Bus voltage BIT1:Speed(R/MIN)(No display at feedback mode) BIT2:Setting speed(R/MIN)				

Function code	Name	Descriptions	Unit	Factory setting	Modif.	Setting range
		(Flicking, no display at feedback mode) Note:If all the BITs are 0,the drive will display setting frequency at stop,display output frequency at operating and display bus voltage at energy feedback mode.				
b4.06	Operating frequency ratio	0.00～99.99	0.01	1.00	○	0~9999
b4.07	Operating speed ratio	0.000～30.000	0.001	1.000	○	0~30000
Group C0:Multi-section parameters						
C0.00	Preset frequency 1	A0.12（Lower limit of frequency）~A0.11（upper limit of frequency）	0.01Hz	5.00Hz	○	0~30000
C0.01	Preset frequency 2	Same as above	0.01Hz	10.00Hz	○	0~30000
C0.02	Preset frequency 3	Same as above	0.01Hz	15.00Hz	○	0~30000
C0.03	Preset frequency 4	Same as above	0.01Hz	20.00Hz	○	0~30000
C0.04	Preset frequency 5	Same as above	0.01Hz	25.00Hz	○	0~30000
C0.05	Preset frequency 6	Same as above	0.01Hz	30.00Hz	○	0~30000
C0.06	Preset frequency 7	Same as above	0.01Hz	35.00Hz	○	0~30000
C0.07	Preset frequency 8	Same as above	0.01Hz	40.00Hz	○	0~30000
C0.08	Preset frequency 9	Same as above	0.01Hz	45.00Hz	○	0~30000
C0.09	Preset frequency 10	Same as above	0.01Hz	50.00Hz	○	0~30000
C0.10	Preset frequency 11	Same as above	0.01Hz	10.00Hz	○	0~30000
C0.11	Preset frequency 12	Same as above	0.01Hz	20.00Hz	○	0~30000
C0.12	Preset frequency 13	Same as above	0.01Hz	30.00Hz	○	0~30000
C0.13	Preset frequency 14	Same as above	0.01Hz	40.00Hz	○	0~30000
C0.14	Preset frequency 15	Same as above	0.01Hz	50.00Hz	○	0~30000
Group C1:Process PID parameters						

Function code	Name	Descriptions	Unit	Factory setting	Modif.	Setting range
C1.00	Close-loop control function	0：Disable 1：Enable	1	0	×	0~1
C1.01	Reference channel selection	0：Digital input 1：AI1； 2：AI2； 3：AI3；	1	1	○	0~3
C1.02	Feedback channel selection	0：AI1； 1：AI2； 2：AI1+AI2； 3：AI1-AI2； 4：MIN（AI1，AI2）； 5：MAX（AI1，AI2）； 6： DI	1	1	○	0~6
C1.03	Digital setting of reference	-10.00V~10.00V	0.01	0.00	○	0~2000
C1.04	Close-loop speed reference	0~39000rpm	1rpm	0	○	0~39000
C1.05	Min reference	0.0%~(C1.07) (Ratio of Min reference to base value of 10V/20mA))	0.1%	0.0%	○	0~1000
C1.06	Feedback value corresponding to the Min reference	0.0~100.0% (Ratio of Min reference to base value of 10V/20mA)	0.1%	0.0%	○	0~1000
C1.07	Max reference	(C1.05)~100.0% (Ratio of Max reference to base value of 10V/20mA)	0.1%	100.0%	○	0~1000
C1.08	Feedback value corresponding to the Max reference	0.0~100% (Ratio of Max reference to base value of 10V/20mA)	0.1%	100.0%	○	0~1000
C1.09	Proportional gain KP	0.000~10.000	0.001	2.000	○	0~10000
C1.10	Integral gain Ki	0.000~10.000	0.001	0.100	○	0~10000
C1.11	Differential gain Kd	0.000~10.000	0.001	0.100	○	0~10000
C1.12	Sampling cycle T	0.01~50.00s	0.01s	0.50s	○	1~5000

Function code	Name	Descriptions	Unit	Factory setting	Modif.	Setting range
C1.13	Output filter	0.01~10.00s	0.01s	0.05	○	1~1000
C1.14	Error limit	0.0~20.0% (Corresponding to close-loop reference)	0.1%	2.0%	○	0~200
C1.15	Close-loop regulation characteristic	0：Positive 1：Negative	1	0	×	0~1
C1.16	Integral regulation selection	0: Stop integral regulation when the frequency reaches the upper and lower limits 1: Continue the integral regulation when the frequency reaches the upper and lower limits	1	0	×	0~1
C1.17	Preset close-loop frequency	0.00~300.00Hz	0.01Hz	0.00Hz	○	0~30000
C1.18	Holding time of preset close-loop frequency	0.0~3600.0S	0.1S	0.0S	×	0~36000
C1.19	Preset close-loop reference 1	-10.00V ~10.00V	0.01V	0.00V	○	0~2000
C1.20	Preset close-loop reference 2	-10.00V ~10.00V	0.01V	0.00V	○	0~2000
C1.21	Preset close-loop reference 3	-10.00V ~10.00V	0.01V	0.00V	○	0~2000
C1.22	Preset close-loop reference 4	-10.00V ~10.00V	0.01V	0.00V	○	0~2000
C1.23	Preset close-loop reference 5	-10.00V ~10.00V	0.01V	0.00V	○	0~2000
C1.24	Preset close-loop reference 6	-10.00V ~10.00V	0.01V	0.00V	○	0~2000
C1.25	Preset close-loop reference 7	-10.00V ~10.00V	0.01V	0.00V	○	0~2000
C1.26	Preset close-loop reference 8	-10.00V ~10.00V	0.01V	0.00V	○	0~2000
C1.27	Preset close-loop	-10.00V ~10.00V	0.01V	0.00V	○	0~2000

Function code	Name	Descriptions	Unit	Factory setting	Modif.	Setting range
	reference 9					
C1.28	Preset close-loop reference 10	-10.00V ~10.00V	0.01V	0.00V	○	0~2000
C1.29	Preset close-loop reference 11	-10.00V ~10.00V	0.01V	0.00V	○	0~2000
C1.30	Preset close-loop reference 12	-10.00V ~10.00V	0.01V	0.00V	○	0~2000
C1.31	Preset close-loop reference 13	-10.00V ~10.00V	0.01V	0.00V	○	0~2000
C1.32	Preset close-loop reference 14	-10.00V ~10.00V	0.01V	0.00V	○	0~2000
C1.33	Preset close-loop reference 15	-10.00V ~10.00V	0.01V	0.00V	○	0~2000
C1.34	Close-loop output reversal selection	0：The close-loop output is negative, the drive will operate at zero frequency. 1：The close-loop output is negative,and the drive operate reverse.	1	0	○	0~1
C1.35	Sleep function selection	0：Disable 1：Enable.	1	0	○	0~1
C1.36	Sleep level	0.0～100.0%	0.1%	50.0%	○	0～1000
C1.37	Sleep latency	0.0～600.0s	0.1s	30.0s	○	0～60000
C1.38	Wake-up level	0.0～100.0%	0.1%	50.0%	○	0～1000
C2：Simple PLC						
C2.00	Simple PLC operation mode selector	Unit’s place of LED: PLC operation mode 0: No function 1: Stop after single cycle 2: Keep final states after single cycle 3: Continuous cycle Ten’s place of LED: Start mode	1	0000	×	0~1123H

Function code	Name	Descriptions	Unit	Factory setting	Modif.	Setting range
		0: Start from first step 1: Start from the step before stop(or alarm). 2: Start from the step and frequency before stop(or alarm) Hundred's place of LED: Storage after power off 0: Disable 1:Save the segment frequency when power off Thousand's place of LED: Time unit selector for each step 0: Second 1: Minute				
C2.01	Step 1 setting	Unit's of LED： 0: Multiple frequency N (N:corresponding to current step) 1: Defined by A0.02 2: Multiple closed-loop reference N(N:corresponding to current step) 3: Defined by C1.01 Ten's place of LED： 0: Forward 1: Reverse 2: Defined by operation command Hundred's place of LED： 0: Acc/Dec time 1 1: Acc/Dec time 2 2: Acc/Dec time 3 3: Acc/Dec time 4	1	000	○	0~323H
C2.02	Step 1 operating time	0.0~6500.0	0.1	20.0	○	0~65000

Function code	Name	Descriptions	Unit	Factory setting	Modif.	Setting range
C2.03	Step 2 setting	Same as C2.01	1	000	○	0~323H
C2.04	Step 2 operating time	0.0~6500.0	0.1	20.0	○	0~65000
C2.05	Step 3 setting	Same as C2.01	1	000	○	0~323H
C2.06	Step 3 operating time	0.0~6500.0	0.1	20.0	○	0~65000
C2.07	Step 4setting	Same as C2.01	1	000	○	0~323H
C2.08	Step 4 operating time	0.0~6500.0	0.1	20.0	○	0~65000
C2.09	Step 5 setting	Same as C2.01	1	000	○	0~323H
C2.10	Step 5 operating time	0.0~6500.0	0.1	20.0	○	0~65000
C2.11	Step 6 setting	Same as C2.01	1	000	○	0~323H
C2.12	Step 6 operating time	0.0~6500.0	0.1	20.0	○	0~65000
C2.13	Step 7 setting	Same as C2.01	1	000	○	0~323H
C2.14	Step 7 operating time	0.0~6500.0	0.1	20.0	○	0~65000
C2.15	Step 8 setting	Same as C2.01	1	000	○	0~323H
C2.16	Step 8 operating time	0.0~6500.0	0.1	20.0	○	0~65000
C2.17	Step 9 setting	Same as C2.01	1	000	○	0~323H
C2.18	Step 9 operating time	0.0~6500.0	0.1	20.0	○	0~65000
C2.19	Step 10 setting	Same as C2.01	1	000	○	0~323H
C2.20	Step 10 operating time	0.0~6500.0	0.1	20.0	○	0~65000
C2.21	Step 11 setting	Same as C2.01	1	000	○	0~323H
C2.22	Step 11 operating time	0.0~6500.0	0.1	20.0	○	0~65000
C2.23	Step 12 setting	Same as C2.01	1	000	○	0~323H
C2.24	Step 12 operating time	0.0~6500.0	0.1	20.0	○	0~65000
C2.25	Step 13 setting	Same as C2.01	1	000	○	0~323H
C2.26	Step 13 operating time	0.0~6500.0	0.1	20.0	○	0~65000
C2.27	Step 14 setting	Same as C2.01	1	000	○	0~323H

Function code	Name	Descriptions	Unit	Factory setting	Modif.	Setting range
C2.28	Step 14 operating time	0.0~6500.0	0.1	20.0	○	0~65000
C2.29	Step 15 setting	Same as C2.01	1	000	○	0~323H
C2.30	Step 15 operating time	0.0~6500.0	0.1	20.0	○	0~65000
Group C3：Swing parameters						
C3.00	Swing function selector	0：Disable 1：Enable	1	0	×	0~1
C3.01	Swing Operation mode	Unit's place of LED：Startup method 0: Auto mode 1: By terminal Ten's place of LED:Swing control 0: Reference center frequency 1: Reference max. Frequency Hundred's place of LED: Swing states storage 0: Save after stop 1: Not save after stop Thousand's place of LED: Swing states storage after power failure 0: Save 1: Not save	1	0000	×	0~1111H
C3.02	Preset swing frequency	0.00Hz~Max. frequency	0.01Hz	0.00Hz	○	0~100000
C3.03	Waiting time for preset swing frequency	0.0~3600.0s	0.1s	0.0s	○	0~36000
C3.04	Swing amplitude	0.0%~50.0%	0.1%	0.0%	○	0~500
C3.05	Jump frequency	0.0%~50.0%	0.1%	0.0%	○	0~500
C3.06	Swing cycle	0.1~999.9s	0.1s	10.0s	○	1~9999
C3.07	Triangle wave rising time	0.0%~100.0%(Swing cycle)	0.1%	50.0%	○	0~1000

Function code	Name	Descriptions	Unit	Factory setting	Modif.	Setting range
Group d0:Status display						
d0.00	Main reference frequency	-300.00~300.00Hz	0.01Hz	0.00	*	0~60000
d0.01	Auxiliary reference frequency	-300.00~300.00Hz	0.01Hz	0.00	*	0~60000
d0.02	Preset frequency	-300.00~300.00Hz	0.01Hz	0.00	*	0~60000
d0.03	Frequency after Acc/Dec	-300.00~300.00Hz	0.01Hz	0.00	*	0~60000
d0.04	Output frequency	-300.00~300.00Hz	0.01Hz	0.00	*	0~60000
d0.05	Output voltage	0~480V	1V	0	*	0~480
d0.06	Output current	0.0~3Ie	0.1A	0.0	*	0~65535
d0.07	Torque current	-300.0~+300.0%	0.1%	0.0%	*	0~6000
d0.08	Magnetic flux current	0~+100.0%	0.1%	0.0%	*	0~1000
d0.09	Motor power	0.0~200.0%（Corresponding to the motor's rated power）	0.1%	0.0%	*	0~2000
d0.10	Motor estimated frequency	-300.00~300.00Hz	0.01	0.00	*	0~60000
d0.11	Motor actual frequency	-300.00~300.00Hz	0.01	0.00	*	0~60000
d0.12	Bus voltage	0~800V	1V	0	*	0~800
d0.13	Drive operation status	0~FFFH bit0：Run/Stop bit1：Reverse/Forward bit2：Operating at zero frequency bit3：Accelerating bit4：Decelerating bit5：Operating at constant speed bit6：Pre-commutation bit7：Tuning bit8：Over-current limiting bit9：DC over-voltage limiting bit10：Torque limiting	1	0	*	0~FFFFH

Function code	Name	Descriptions	Unit	Factory setting	Modif.	Setting range
		bit11：Speed limiting bit12：Drive fault bit13：Speed control bit14：Torque control bit15：Position control (Reserved)				
d0.14	Input terminals status	0~FFH，0：OFF；1：ON	1	00	*	0~FFH
d0.15	Output terminals status	0~1FH，0：OFF；1：ON	1	0	*	0~1FH
d0.16	AI1 input	-10.00~10.00V	0.01V	0.00	*	0~2000
d0.17	AI2 input	-10.00~10.00V	0.01V	0.00	*	0~2000
d0.18	AI3 input	-10.00~10.00V	0.01V	0.00	*	0~2000
d0.19	Percentage of AI1 after regulation	-100.00%~110.00%	0.01%	0.00	*	0~20000
d0.20	Percentage of AI2 after regulation	-100.00%~110.00%	0.01%	0.00	*	0~20000
d0.21	Percentage of AI3 after regulation	-100.00%~110.00%	0.01%	0.00	*	0~20000
d0.22	AO1 output	0.0~100.0% (Ratio of the full range)	0.1%	0.0%	*	0~1000
d0.23	AO2 output	0.0~100.0% (Ratio of the full range)	0.1%	0.0％	*	0~1000
d0.24	Process close-loop reference	-100.0~100.0% (Ratio of the full range)	0.1%	0.0%	*	0~2000
d0.25	Process close-loop feedback	-100.0~100.0% (Ratio of the full range)	0.1%	0.05%	*	0~2000
d0.26	Process close-loop error	-100.0~100.0% (Ratio of the full range)	0.1%	0.0%	*	0~2000
d0.27	Process close-loop	-100.0~100.0% (Ratio of the full range)	0.1%	0.0%	*	0~2000
d0.28	Temperature of heatsink 1	0.0~150.0℃	0.1℃	0.0	*	0~1500
d0.29	Temperature of heatsink 2	0.0~150.0℃	0.1℃	0.0	*	0~1500
d0.30	Total conduction	0~65535 hours	1 hours	0	*	0~65535

Function code	Name	Descriptions	Unit	Factory setting	Modif.	Setting range
	time					
d0.31	Total operating time	0~65535 hours	1 hours	0	*	0~65535
d0.32	Total fan's operating time	0~ 65535 hours	1 hours	0	*	0~65535
d0.33	ASR controller output	-300.0~300.0% (Corresponding to drive's rated torque）	0.1%	0.0%	*	0~6000
d0.34	Reference torque	-300.0~300.0%（Corresponding to drive's rated torque）	0.1％	0.0％	*	0~6000
Group d1:Fault record						
d1.00	Fault record 1	0：No fault records 1 ： Over-current during acceleration (E001) 2 ： Over-current during deceleration (E002) 3：Over-current in constant speed operation (E003) 4 ： Over voltage during acceleration (E004) 5 ： Over voltage during deceleration (E005) 6：Over voltage in constant-speed operating process (E006) 7：Drive's control power supply over voltage (E007) 8：Input phase loss (E008) 9：Output phase failure (E009) 10 ： Protections of IGBT act (E010) 11 ： IGBT module's heatsink overheat (E011) 12：Rectifier's heatsink overheat (E012) 13：Drive overload (E013) 14：Motor over-load (E014)	1	0	*	0~50

Function code	Name	Descriptions	Unit	Factory setting	Modif.	Setting range
		15：External equipment fails (E015) 16：EEPROM R/W fault (E016) 17：RS232/RS485 communication failure (E017) 18：Contactor not closed (E018) 19：Current detection circuit has fault,Hall sensor or amplifying circuit(E019) 20：Reserved 21：Reserved 22：Reserved 23：Parameter copy error（E023） 24：Auto-tuning fails（E024） 25：PG failure（E025） 26：Reserved 27：Brake unit failure（E027） Note： ① E007 is not detected if the the model is 18.5G/22G or blow. ② Fault E010 can’t be reset until delaying 10 seconds. ③ The over-current fault can’t be reset until delaying 6 seconds. ④ The keypad will display fault A××× when fault warning appears.(For example,when contactor failure,the keypad will display E018 if it is action protection,and the keypad will display A018 if it is warning and continue to				

Function code	Name	Descriptions	Unit	Factory setting	Modif.	Setting range
		run).				
d1.01	Bus voltage of the latest failure	0~999V	1V	0V	*	0~999
d1.02	Actual current of the latest failure	0.0~999.9A	0.1A	0.0A	*	0~9999
d1.03	Operation frequency of the latest failure	0.00Hz~300.00Hz	0.01Hz	0.00Hz	*	0~30000
d1.04	Operation status of the latest failure	0~FFFFH	1	0000	*	0~FFFFH
d1.05	Fault record 2	0~55	1	0	*	0~50
d1.06	Fault record 3	0~55	1	0	*	0~50
Group d2: Product Identity Parameters						
d2.00	Serial number	0~FFFF	1	100	*	0~65535
d2.01	Software version number	0.00~99.99	1	1.00	*	0~9999
d2.02	Custom-made version number	0~9999	1	0	*	0~9999
d2.03	Rated capacity	Output power ，0~999.9KVA (Dependent on drive’s model)	0.1KVA	Factory setting	*	0~9999
d2.04	Rated voltage	0~999V (Dependent on drive’s model)	1V	Factory setting	*	0~999
d2.05	Rated current	0~999.9A (Dependent on drive’s model)	0.1A	Factory setting	*	0~9999
Group U0:Factory parameters						
U0.00	Factory password	**** Note:Other parameters in this group can’t display until entering the right password.	1	Factory setting	—	0~FFFF

Note： ○: Can be modified during operation；

×: Cannot be modified during operating；

*: Actually detected and cannot be revised；

—: Defaulted by factory and cannot be modified.

Communication Protocol

1. Networking Mode

According to the following pic 10-1, there are two networking modes: Single master and multi-slave, Single master and single slave.

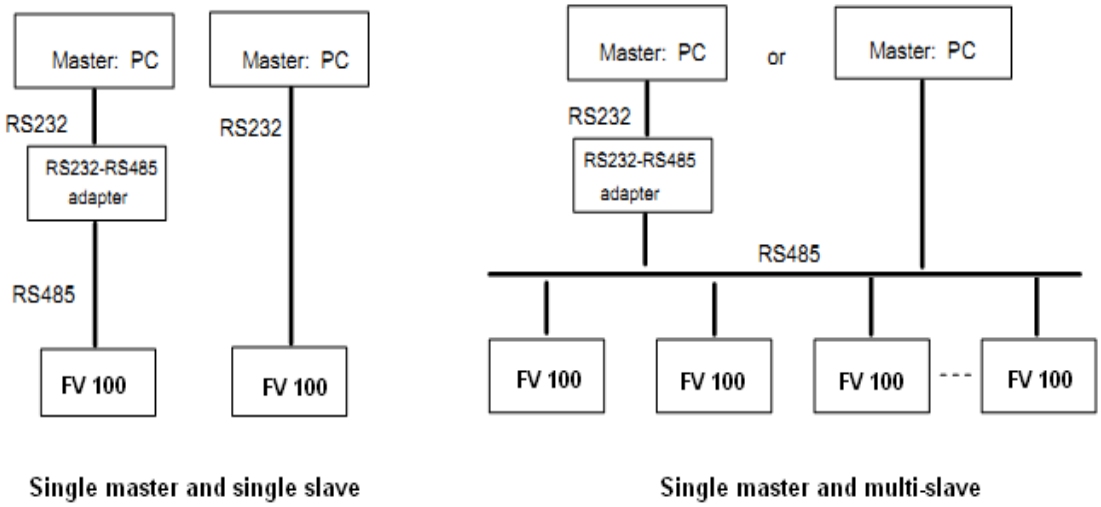

Pic 10-1

2. Interfaces

RS485 or RS232: asynchronous, semi-duplex

Default: 8-N-1, 9600bps, RTU. See Group b3 for parameter settings.

3. Communication Modes

1. The communication protocol for the drive is Modbus. It support normal reading and writing of the registers, also supports managing the function code.

2. The drive is a slave in the network. It communicates in “point to point” mode.

3. When there is multi-station communication or the communication distance is long, please connect a 100~200 ohm resistance to the positive and minus terminal of the master’s signal wire in parallel.

4.FV 100 normally provides RS485 interface, if you need RS232, please choose to add a RS232/RS485 conversion equipment.

4. Protocol Format

FV100 support Modbus RTU and ASCII, its frame format is shown in Fig.10-2.

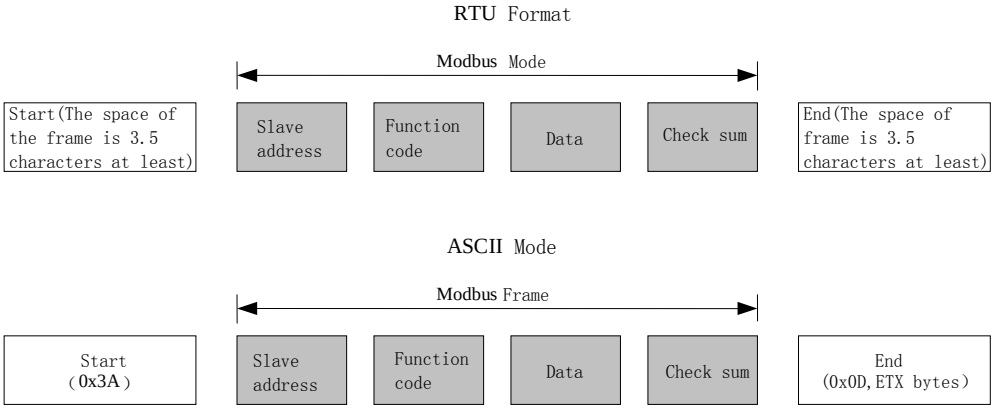

Fig.10-2 Modbus protocol format

Modbus use “Big Endian” of encoder mode,which means sending data with high byte in front and low byte behind.

1. RTU mode

In RTU mode,there must be a idle of at least 3.5 characters between two frames.It use CRC-16 for data check.

Following is an example for read the parameter of internal register 0101(A1.01) from No.5 slave.

Request frame：

Slave address	Function code	Data				Checksum	
		Register address		Length			
0x05	0x03	0x01	0x01	0x00	0x01	0xD5	0xB2

Response frame：

Slave address	Function code	Data			Checksum	
		Response length	Register content			
0x05	0x03	0x02	0x13	0x88	0x44	0xD2

Therein, checksum is CRC value.

2. ASCII mode

In ASCII *mode*, characters are used to start and end a frame. The colon “0x3A” is used to flag the start of a message and each message is ended with a “0x0D,0x0D” combination. Except frame header and end of frame,all other messages are coded in hexadecimal values, represented with readable ASCII characters. Only the characters **0**...**9** and **A**...**F** are used for coding. Herein the data use LRC as error checksum.

Following is an example for writing value 4000(0x0FA0) into the parameter of internal register 0201(A2.01) from No.5 slave.

Request frame：

	Frame header	Slave address		Function code		Data								Check code		Frame trail	
						Register address				Setting value							
Character	:	0	5	0	6	0	2	0	1	0	F	A	0	4	3	CR	LF
ASCII	3A	30	31	30	36	30	32	30	31	30	46	41	30	34	33	0D	0A

Therein,the check code is LRC checksum,which value is equal to the complement of （05+06+02+01+0x0F+0xA0）.

Response frame：

	Frame header	Slave address		Function code		Data								Check code		Frame trail	
						Register address				Setting value							
Character	:	0	5	0	6	0	2	0	1	0	F	A	0	4	3	CR	LF
ASCII	3A	30	31	30	36	30	32	30	31	30	46	41	30	34	33	0D	0A

VFD can set different delay time for response according to different application.For RTU mode,the actual delay time for response is 3.5 characters interval at least.For ASCII mode,the actual delay time for response is 1 ms at least.

5. Protocol Function

The main functions of Modbus are read and write parameters.Different function codes need different operation request.The modbus protocol of VFD support the operations in the following table.

Function code	Meaning
0x03	Read parameters of VFD,including function code parameters,control parameters and status parameters.
0x06	Rewrite single function code or control parameter with 16bit length,the value of the parameter can’t be saved after VFD power off.
0x08	Diagnosis.
0x10	Rewrite multiple function code or control parameters,the value of the parameters can’t be saved after VFD power off.
0x41	Rewrite single function code or control parameter with 16bit length,the value can be saved after VFD power off.
0x42	Manage function code of VFD.
0x43	Rewrite multiple function code or control parameters,the value of the parameters can be saved after VFD power off.

All the function code, control parameters and status parameters of VFD are mapping to the read/write register of Modbus.The group number of function code is mapping to the high byte of register address and the index address in the group is mapping to the low byte of register address.The corresponding relationship between group number and register address is shown in following table.

Group No.	High bye of mapping address	Group No.	High bye of mapping address
Group A0	0x00	Group B2	0x0C
Group A1	0x01	Group B3	0x0D
Group A2	0x02	Group B4	0x0E
Group A3	0x03	Group C0	0x14
Group A4	0x04	Group C1	0x15
Group A5	0x05	Group D0	0x1E
Group A6	0x06	Group D1	0x1F
Group A7	0x07	Group D2	0x20
Group A8	0x08	Group U0	0x5A
Group B0	0x0A	Control parameter	0x32
Group B1	0x0B	Status parameter	0x33

For example,the register address of function code A3.02 is 0x0302,and the register address of the first control parameter(Control command 1) is 0x3200.

6.Control parameters and status parameters of VFD

The control parameters of VFD can achieve the function such as startup,stop,setting operating frequency and so on.Retrieving the status parameters of VFD can obtain the parameters such as operating frequency,output current,output torque and so on.

1. Control parameter

The control parameters of VFD are shown in following table.

Register	Parameter Name	Saved after powered off	Note
0X3200	Control word 1	No	
0x3201	Main setting	No	The main setting frequency: In the common operation mode, the channel of main setting is serial communication, it tack effects if the bit8 of control word 1 is set on. Whether it saves or not depends on the setting in A2.03
0x3202	Operation frequency setting	No	Same as above
0x3203	Digital closed loop setting	yes	Takes effects after the closed loop is enabled
0x3204	Pulse closed loop setting	/	Do not support
0x3205	Analog output AO1 setting	No	Enable when A6.28=15
0x3206	Analog output AO2 setting	No	Enable when A6.29=15
0x3207	Digital output DO setting	No	Enable when A6.25=65
0x3208	Frequency Proportion setting		Do not support
0x3209	Virtual terminal control setting	No	Bit~bit6: X1~X7. Corresponding to the ON state of the bits in A6.24 Bit10~bit13: Y1/Y2/RO1/RO2, They are enabled when A6.14~A6.17=17
0x320A	Set the acceleration time	Yes	
0x320B	Set the deceleration time	Yes	
0x320D	Torque Setting	No	In the torque mode, the torque setting channel is serial port
Ox3212	Control command word 2	No	

Note:

（1）When read control parameters,it will return the value which is rewrote in the previous communication.

（2）In control parameters,the preset value,range of input/output setting value and decimal point scaling should refer to the corresponding function code.

The bits for the control command word 1 are defined as follows:

Bit	Value	Function	Note
bit2~bit0	111B	Running command	Start VFD（enable when jog is disable）
	110B	Stop mode 0	Stop according to the preset deceleration time(enable when jog is disable)
	101B	Stop mode 1	Coast to stop
	100B	Stop by external fault	Coast to stop and VFD display external fault
	011B	Stop mode 2	Not support
	Others	Reserved	
bit3	1	Reverse	Set the operating direction when run command is enable
	0	Forward	
bit4	1	Jog forward	No action when bits for jog forward and reverse are enable at the same time,and jog stop when both are disable at the same time.
	0	Jog forward disable	
bit5	1	Jog reverse	
	0	Jog reverse disable	
bit6	1	Enable Acc/Dec	The bit5~bit0 of control word 1 are enable when this bit is enable.
	0	Disable Acc/Dec	
bit7	1	Host computer control word 1 enable	Selection bit of host computer control word 1
	0	Host computer control word 1 disable	
bit8	1	Main reference enable	Selection bit of main reference
	0	Main reference disable	
bit9	1	Fault reset enable	Selection bit of fault reset
	0	Fault reset disable	
bit15~bit10	000000B	Reserved	

Note:

（1）The host computer control word(control word1 and control word 2) is enable when set “Methods of inputting operating commands” to “communication control”.The control word 1 is enable when the bit7 of control word 1 is enable.And bit5~bit0 are enable when the bit6 of control word 1 is enable.

（2）Processing of fault and alarm in host computer:when VFD is failure,all the command of control word 1 and control word 2,except fault reset command,are disable,it need to reset fault firstly before sending other commands.When the alarm happens,the control words is still enabled.

The bits definitions of control word 2 are shown as follows:

Bit	Value	Function	Note

bit0	1	VFD operation disable	Selection bit for VFD operation enable/disable
	0	VFD operation enable	
bit1	1	Running(The direction refer to function code)	Running direction
	0	Other operation status(Refer to control word 1)	
bit2	1	Auxiliary reference enable	The selection bit for auxiliary reference frequency.
	0	Auxiliary reference disable	
bit3	1	The control word 2 enable	The selection bit for control word 2.
	0	The control word 2 disable	
bit15~bit4		Reserved	

Note: control word 2 is enabling when the bit3 of control word 2 is enable.

2．Status parameters

Register address	Parameters name	Note
0x3300	VFD operation status word 1	
0x3301	Current main reference value	Current operating frequency
0x3302	Slave model	
0x3303	VFD model	
0x3304	Software version	
0x3305	Current operating frequency	
0x3306	Output current	
0x3307	Output voltage	
0x3308	Output power	
0x3309	Operating rotary speed	
0x330A	Operating line speed	
0x330B	Analog close-loop feedback	
0x330C	Bus voltage	
0x330D	External counter	Not support
0x330E	Output torque	
0x330F	Digital input/output terminal status	bit0～bit6：X1～X7；bit10～bit12：Y1/Y2/RO1。
0x3310	Actual length	Not support
0x3311	Operating frequency after compensation	Not support
0x3312	The first operating fault	
0x3313	The second operating fault	
0x3314	The latest operating fault	
0x3315	Operating frequency setting	
0x3316	Rotary speed setting	
0x3317	Analog close-loop setting	
0x3318	Line speed setting	

Register address	Parameters name	Note
0x3319	AI1	
0x331A	AI2	
0x331B	Length setting	Not support
0x331C	Acceleration time 1 setting	
0x331D	Deceleration time 1 setting	
0x331E	Methods of inputting operating commands 0：Panel control 1：Terminal control 2：Communication control	
0x331F	VFD operating status word 2	
0x3320	Main reference frequency selector 0:Digital setting 1(Keypad ∧∨ setting) 1:Digital setting 2(Terminal UP/DN setting) 2:Digital setting 3 (Serial port) 3:AI analog setting 4:DI pulse setting 5:Expansion card.	
0x3321	Accumulated length	Not support

Note:

（1）Status parameters don’t support write operation.

（2）The encoding rules of slave model is as follows:the range of slave model is 0~999.

The bit definitions of VFD operating status word 1 are shown in following table:

Bit	Value	Function	Note
bit0	1	VFD running	
	0	VFD stop	
bit1	1	VFD reverse rotation	
	0	VFD forward rotation	
bit2	1	Reach main reference	
	0	Not reach main reference	
bit3	1	Serial port control enable	
	0	Serial port control disable	
bit4	1	Serial port setting enable	
	0	Serial port setting disable	
bit5~bit6		Reserved	
bit7	1	Alarm	When this bit is 0,the bit15~8 of control word 1show the status.If bit15~8 are 0,means normal.If not,means failure.
	0	Fault or normal	
bit15~ bit8	0x00~0xFF	Fault/alarm code	0: normal. Not 0: fault/alarm.

The bit definitions of VFD operating status word 2 are shown in following table:

Bit	Value	Function	Note
bit0	1	Jog running	
	0	Non-jog running	
bit1	1	Close loop running	
	0	Non-close loop running	

bit2	1	PLC running	
	0	Non-PLC running	
bit3	1	Multi-section frequency operation	
	0	Non multi-section frequency operation.	
bit4	1	Common operation	
	0	Non-common operation	
bit5	1	Swing frequency	
	0	Non-swing frequency	
bit6	1	Under voltage	
	0	Normal voltage	
bit7		Reserved	
bit8		Servo operation	
bit9		Customized operation	
bit10		Synchronous speed operation	
Others		Reserved	

The bit definitions of VFD operating status word 3 are shown as following table:

Bit	Value	Function	Note
bit0~bit1		Reserved	
bit2		Zero speed operation	
bit3		Accelerating	
bit4		Decelerating	
bit5		Constant speed running	
bit6		Pre-excitation	
bit7		Tuning	
bit8		Over-current limiting	
bit9		DC over-voltage limiting	
bit10		Torque limiting	
bit11		Speed limiting	
bit12		VFD failure	
bit13		Speed control	
bit14		Torque control	
bit15		Position control	

1. Some instructions

1. For function code 0x10 and 0x43,when rewrite multiple continous function codes,if any one of the function codes is invalid for write operation,then it will return error information and all of the parameters can’t be rewritten.When rewrite multiple continuous control parameters,if any one of the parameters is invalid for write operation, then it will return error information and this parameter and others behind can’t be rewritten,but other parameters before this parameter can be rewritten normally.

2. For some special function code,Using 0x06 and 0x41 or 0x10 and 0x43 are the same function,in write operation,the parameters can be saved after power failure.

Function code	Description

B4.02	Parameters protection setting
A6.00~A6.07	Selection of input terminal X1~X7
A2.03	Main reference frequency control
A2.03	Auxiliary reference frequency control
C2.00	PLC operation mode
C3.00	Swing frequency operation mode
B0.00	Motor rated power
U0.01	Machine model setting(Factory parameter)
U0.09	VFD series selection(Factory parameter)

3．Some control parameters can’t save in EEPROM,so for these parameters,using function code 0x41 and 0x06 or 0x43and 0x10 are the same,mean parameters can be saved after power failure.

4．Some internal parameters of VFD are reserved and can’t be changed via communication,refer to following table:

Function code	Description
B4.04	Parameters copy
B0.11	Motor parameters auto-tuning

5．The operation of user password and factory password in host computer

（1）User password

1）Protection of user password:read/write function code,function code management(except “read address of displaydata” and”switch display data”)

2）If you set user password（A0.00!=0）,then you must enter the right password to A0.00 when you want to visit function code,but control parameters and status parameters are not protected by user password.

3）User password can’t be set,change or cancel by host computer,it can only operated by keypad. To A0.00 of write operation, only effective in two situations: one is in the password decryption; Second,write 0 is in the situation of no password.It will return invalid operation information in other situations.

4）The operation of host computer and keypad to user password is independent. Even if the keyboard complete decryption, but host computer still need to decrypt when it want to access function codes, and vice versa.

5）After host computer acquire the access right of parameters,when reading user password,it will return “0000” instead of actual user password.

6）The host computer will acquire the access right of function code after decryption,if there is no communication for 5minutes,then the access right will disable.And if it want to access function code,it need to enter user password again.

7）When host computer has acquired access right(no user password or has decryption),if the user password is rewritten by keypad at this moment,the host computer has still the current access right and no need to decryption again.

（2）Factory password

1）Protection range of factory password:read/write parameters of Group U0,function code management of Group U0.

2）Host computer can only access function code of Group U0 after decryption(write correct factory password into U0.00).If there is no communication for 5 minutes after acquiring access right,the right will disable automatically,and it need to enter password again to access Group U0.

3）After acquiring the access right of Group U0,if host computer read U0.00,it will return 0000 instead of actual factory password.

4）The operation of host computer and keypad to user password is independent. They need to enter the correct password separately to acquire the access right.

5）Host computer has no right to modify factory password.When host computer write data into U0.00, it will return invalid operation unless the data is correct password.

2. Application example

FV100 only support 16bit access.

Start No.5 VFD to perform forward rotation.

Data frame	Address	Function code	Register address	Register content	Checksum
Request	0x05	0x06	0x3200	0x00C7	0xC764
Response	0x05	0x06	0x3200	0x00C7	0xC764

No.5 VFD stops in mode 0.

Data frame	Address	Function code	Register address	Register content	Checksum
Request	0x05	0x06	0x3200	0x00C6	0x06A4
Response	0x05	0x06	0x3200	0x00C6	0x06A4

No.5 VFD jogs forward.

Data frame	Address	Function code	Register address	Register content	Checksum
Request	0x05	0x06	0x3200	0x00D0	0x876A
Response	0x05	0x06	0x3200	0x00D0	0x876A

No.5 VFD stop jogging.

Data frame	Address	Function code	Register address	Register content	Checksum
Request	0x05	0x06	0x3200	0x00C0	0x86A6
Response	0x05	0x06	0x3200	0x00C0	0x86A6

No.5 VFD reset fault:

Data frame	Address	Function code	Register address	Register content	Checksum
Request	0x05	0x06	0x3200	0x0280	0x8636
Response	0x05	0x06	0x3200	0x0280	0x8636

Read the operating frequency of No.5 VFD and the response operating frequency of the VFD is 50.00Hz:

Data frame	Address	Function code	Register address	Number of registers or bytes	Register content	Checksum
Request	0x05	0x03	0x3301	0x0001	None	0xDB0A
Response	0x05	0x03	None	0x02	0x1388	0x44D2

Rewrite the acceleration time 1(Function code A0.06) of No.5 VFD to 10.0s and can’t save after power failure.

Data frame	Address	Function code	Register address	Register content	Checksum
Request	0x05	0x06	0x0006	0x0064	0x69A4
Response	0x05	0x06	0x0006	0x0064	0x69A4

Read the output current of No.5 VFD and the response output current of the VFD is 30.0A.

Data frame	Address	Function code	Register address	Number of registers or bytes	Register content	Checksum
Request	0x05	0x03	0x3306	0x0001	None	0x6ACB
Response	0x05	0x03	None	0x02	0x012C	0x49C9

Read the deceleration time 1(Function code A0.07) of No.5 VFD and the response deceleration time of the VFD is 6.0s.

Data frame	Address	Function code	Register address	Number of registers or bytes	Register content	Checksum
Request	0x05	0x03	0x0007	0x0001	None	0x344F
Response	0x05	0x03	None	0x02	0x003C	0x344F

Scaling relationship of VFD:

A）Scaling of frequency C is 1：100.

If you want to make the VFD run at 50Hz,then the main reference should be set as 0x1388(5000).

B）Scaling of time is 1：10

If you want to set the acceleration time of the VFD as 30s,then the function code should be set as 0x012C(300).

C）Scaling of current is 1：10

If the response current of VFD is 0x012C (300), then current of the VFD is 30A.

D）Output power is the absolute value.

E）Other (such as the input and output terminals, etc.) please reference inverter user manual