EMERSON™
Industrial Automation

EV2100

Dedicated AC Drive for Fan & Pump Applications

7.5kW-280kW
380V-440V

CONTROL TECHNIQUES

EMERSON
Industrial Automation

EV2100

7.5kW-280kW
380-440V

Dedicated AC Drive for Fan &Pump Applications

EV2100 is a series of high performance AC drives for fan & pump applications. It is designed with high torque, high accuracy, and wide speed-adjusting capabilities. Meanwhile it provides unrivalled trip-less performance, highly adaptable to poor power quality condition, wide temperature operation range and humidity.

Performance

High-performance Fan & Pump Drive:

Motor Parameter Auto-tuning

- Motor parameters accurately derived by stationary or rotating auto-tune mode in order to achieve optimal control performances.

High Starting Torque

- Magnetization and load currents are control real time to ensure the motor can deliver maximum output torque at 150% full load at 0.5Hz.

High Accuracy Speed Control

- Auto slip compensation is introduced to allow the drive to automatically adjust the output frequency dynamically according to the slip load during operation, so that constant speed can be maintained.

Quick trip-less start control

- The motor current is clamped to an adjustable current limit ensuring maximum starting torque. The drive applies auto boost to the motor when running under low speed condition.

Smooth Acceleration and Deceleration Control

- When the settings of the acceleration and deceleration times are less than ideal, the drive will adapt itself with suitable acceleration and deceleration rates to start and stop the load smoothly.

Trip-less Control Under Unstable Load Conditions

- The drive is capable of automatically adapting the current limit and output frequency to maintain the motor torque without tripping under unstable load situation.

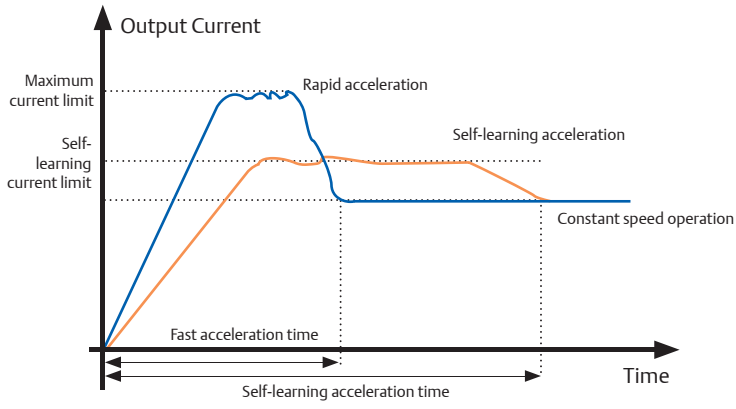

Self-learning acceleration and deceleration

High Reliability Design:

Start-up at Low Voltage with Switching Power Supply

- Better adapt to poor power quality grid supply; drive can start up under low input voltage condition

Automatic Voltage Regulation (AVR)

- Automatic voltage regulation (AVR) keeps the output voltage of the drive constant despite fluctuation in the input power supply.

Over-modulation Technique for Long-term Low Voltage Operation

- PWM over-modulation technique can effectively enhance and improve the use of the DC bus voltage under low input voltage situation.

Able to adapt to High Temperature Environment

- Adopt best ventilation design by automatically adjusts the PWM switching frequency to control its internal temperature depending on the temperature and load conditions; the reliability of product is not compromised under high temperature situation.

Independent air duct design

- Independent air duct ventilation design delivers the best cooling results, and also enhances the adaptability for harsh environments applications.

Reliable EMC Compliance

- Anti-surge design, control board power supply is completely isolated, the inputs and outputs are separated with optocouplers, which effectively prevent against surges, power grid noise, high frequency and static effects to the equipments

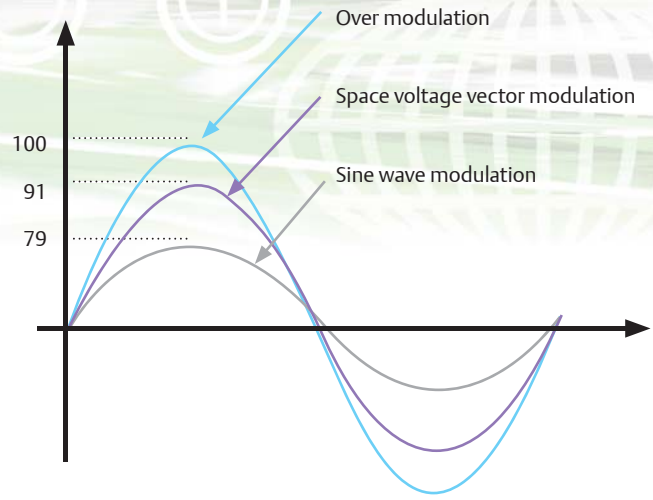

Over modulation technique

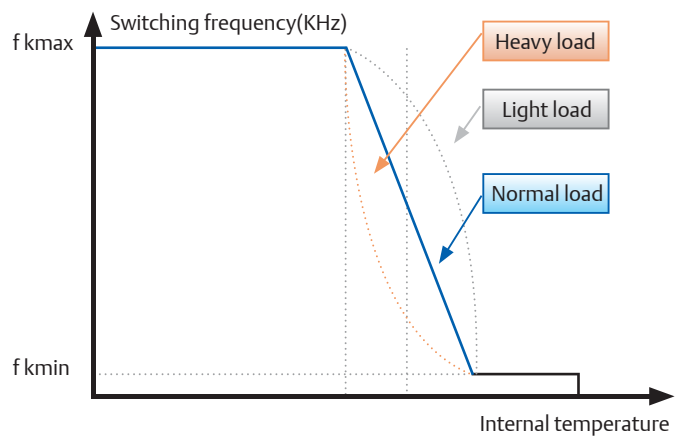

Switching frequency auto-adjusting

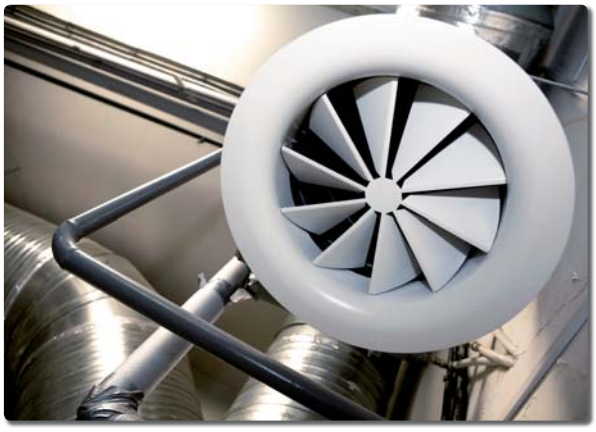

EMERSON
Industrial Automation

Specialized Functions for Fan & Pump Applications:

PI closed-loop control

- Built-in PI control function - pressure transmitter used as built-in PI's feedback sensor to construct analog feedback control system.

Zero frequency hysteresis (Sleep) control

- Sleep mode can avoid open-loop or closed-loop PI to run at low speed. The sleep function helps with energy-saving for water supply systems at night.

Multi-step pressure control

- With built-in simple PLC function and the PI closed-loop control, it delivers up to 7 steps of pressure control; periodic multi-speed operation can be achieved without the PLC function.

Manual / automatic Switching Control

- Provides two independently defined frequency curves, seamlessly switch for manual and automatic control.

Motor Noise Control (Reduction)

- Special spectrum equalization technique is applied to recognize noise spectrum to reduce motor noises

Automatic Energy-saving Operation

- Keep output torque constant and automatically adjusts output current and voltage to achieve the best energy-saving effect

Optional Power Failure Restart Function

- The drive could be selected to restart after a power failure. This is particularly useful for unattended applications. The drive automatically restarts on restoring power, after a period of down time. This function does not post any safety concerns.

Main applications

- HVACR
- Chemical
- Power
- Metallurgy
- Petrochemical
- Public Utility

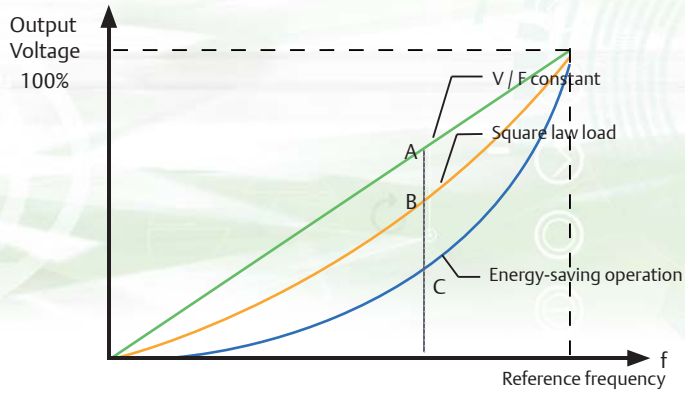

Automatic energy-saving operation VA> VB> VC

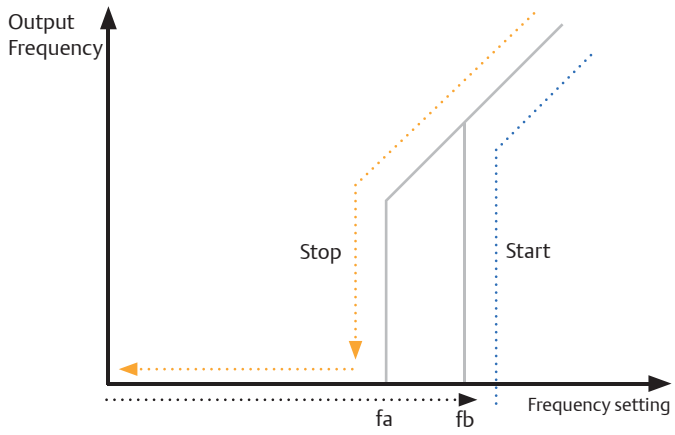

Zero frequency hysteresis and sleep functions

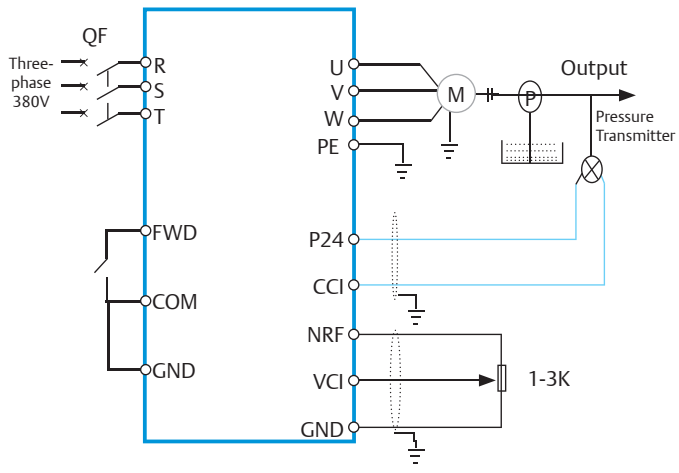

Built-in PI analog feedback control system

EV2100 Product Specification

Voltage Range

Input

- Rated voltage: Three-phase, 380V ～ 440V; Frequency: 50Hz/60Hz
- Operating voltage range
  Voltage: 320V ～ 460V; voltage unbalance: <3%; Frequency: ± 5%

Output

- Rated voltage: 380V ; Frequency: 0Hz ～ 600Hz
- Overload capacity: 1 minute for 110% rated current; 1 second for 150% rated current

Control Function

Modulation

- Flux vector PWM modulation

Speed range

- 1:100

Starting Torque

- 150% full load torque at 0.50Hz

Steady state speed accuracy

- ≤ ± 0.5% rated synchronous speed

Frequency Accuracy

- Digital setting: the highest frequency × ± 0.01%; Analog setting: maximum frequency × ± 0.2%

Frequency resolution

- Digital setting: 0.01Hz; analog settings: maximum frequency × 0.1%

Torque boost

- Automatic torque boost, manual torque boost from 0.1% to 30.0%

V / F curve

- Four modes: 1 customized V / F curve plus 3 torque reduction function curves (2.0 times power, 1.7 times power, 1.2 times power)

Acceleration and deceleration curves

- Three modes: linear Acceleration/Deceleration, S-curve Acceleration/Deceleration, auto Acceleration/Deceleration; four Acceleration/Deceleration time settings (maximum: 60 hours), selectable unit (second/minute)

Multiple preset speed operation

- Achieved through built-in PLC or control terminals

Built-in PI

- Easy to build closed loop control system

Automatic energy-saving operation

- V/F curve is automatically optimized according to load conditions to achieve energy-saving operation

Mains Dip Ride Through

- Despite the mains voltage change, the output voltage is maintained constant automatically

Automatic Current Limiting

- Apply auto current limiting during operation to avoid frequent tripping due to over-current.

Automatically Adjustable Switching Frequency

- Automatically adjust the switching frequency according to the load demand

Operating function

Control command channel

- Control command can be issued through operation panel, control terminals, and the serial ports; different channels are switchable

Frequency setting channel

- Digital setting, analog voltage/current setting, pulse setting and serial ports setting; different settings methods are switchable.

Auxiliary frequency setting

- Flexible auxiliary frequency tuning and synthesis

Pulse output terminals

- 0 ～ 50kHz pulse square wave signal output, able to output set frequency, output frequency and other programmable parameters.

Analog output terminals

- 2 analog outputs, 0 / 4 ～ 20mA or 0 / 2 ～ 10V are selectable, able to output set frequency, output frequency and other programmable parameters.

Drive Part Descriptions

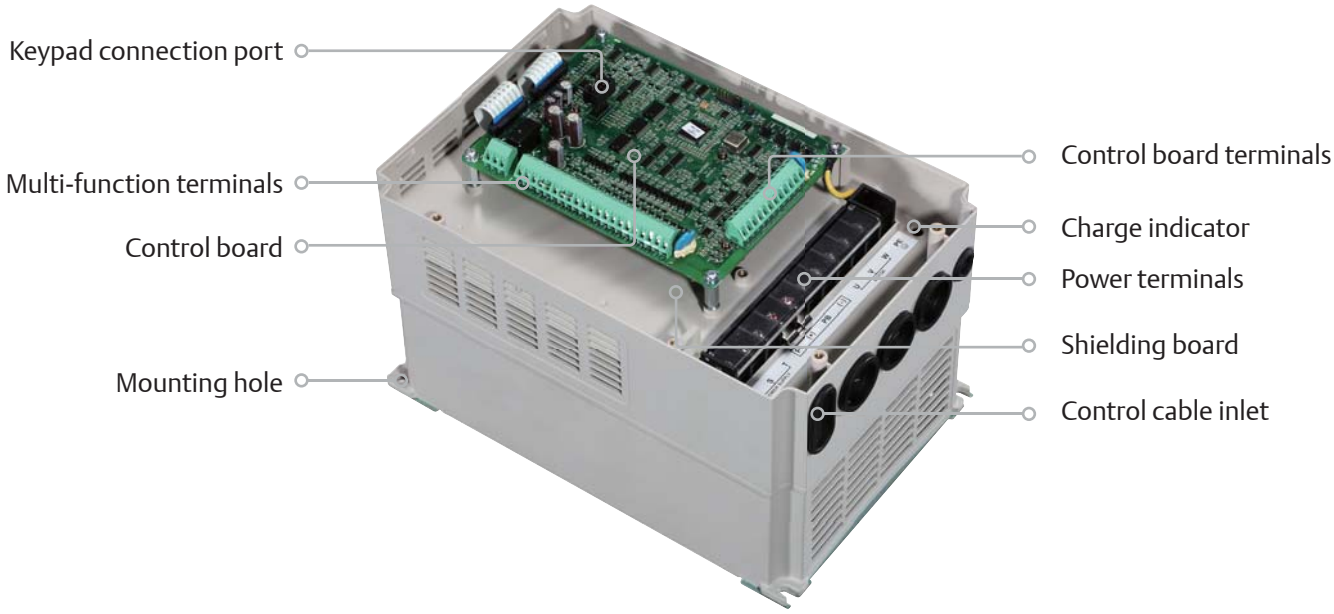

Environment

Operating site

- Indoor, away from direct sunshine, free from dust, corrosive gas, flammable gas, oil mist, water vapor, water dripping, salt, etc.

Altitude

Less than 1,000 m

Ambient temperature

- -10°C～+40°C (derate when used in ambient temperature of 40°C～50°C)

Humidity

- Less than 95% RH, no condensation

Storage temperature

–40°C～+70°C

Vibration

- Less than 5.9 m / s^2 (0.6g)

Structure

- Protection class: IP20
- Cooling method: forced air cooling with fan control

Installation

- Mounted on the wall or inside cabinet

Dimensions and weight

7.5kW～11kW
Gross weight: 7.5kg
Mouting hole diameter: 6.8mm

15kW～18.5kW
Gross weight: 12kg
Mouting hole diameter: 6.8mm

22kW～30kW
Gross weight: 13/15kg
Mouting hole diameter: 7mm

37kW～55kW
Gross weight: 35/38kg
Mouting hole diameter: 9mm

75kW～110kW
Gross weight: 50/90kg
Mouting hole diameter: 10mm

132kW～200kW
Gross weight: 100kg
Mouting hole diameter: 14mm

220kW～280kW
Gross weight: 140kg
Mouting hole diameter: 14mm

Order code

EV2100 – 4 T 0075

Drive series

Voltage	Code
380V	4

Input Voltage	Code
3-phase	T

Code	Motor power (kW)
0075	7.5
0110	11
0150	15
0185	18.5
0220	22
0300	30

Code	Motor power (kW)
0370	37
0450	45
0550	55
0750	75
0900	90
1100	110

Code	Motor power (kW)
1320	132
1600	160
2000	200
2200	220
2800	280

Rating

Model	Rated capacity (kVA)	Rated input current (A)	Rated output current (A)	Motor power (kW)
EV2100-4T0075	11	20.5	17	7.5
EV2100-4T0110	17	26	25	11
EV2100-4T0150	21	35	32	15
EV2100-4T0185	24	38.5	37	18.5
EV2100-4T0220	30	46.5	45	22
EV2100-4T0300	40	62	60	30
EV2100-4T0370	50	76	75	37
EV2100-4T0450	60	92	90	45
EV2100-4T0550	72	113	110	55
EV2100-4T0750	100	157	152	75
EV2100-4T0900	116	180	176	90
EV2100-4T1100	138	214	210	110
EV2100-4T1320	167	256	253	132
EV2100-4T1600	200	307	304	160
EV2100-4T2000	250	385	380	200
EV2100-4T2200	280	430	426	220
EV2100-4T2800	342	525	520	280

Accessories

The Following products are standard accessories.

LED keypad

- 4 bit, 8-segment LED: Displays drive's status, parameters and fault code
- 3 unit indicators: 7 different combinations and each combination corresponds one type of units
- 2 status indicators: Indicate operating status and control mode

DC reactor (standard for 90kW and above drives)

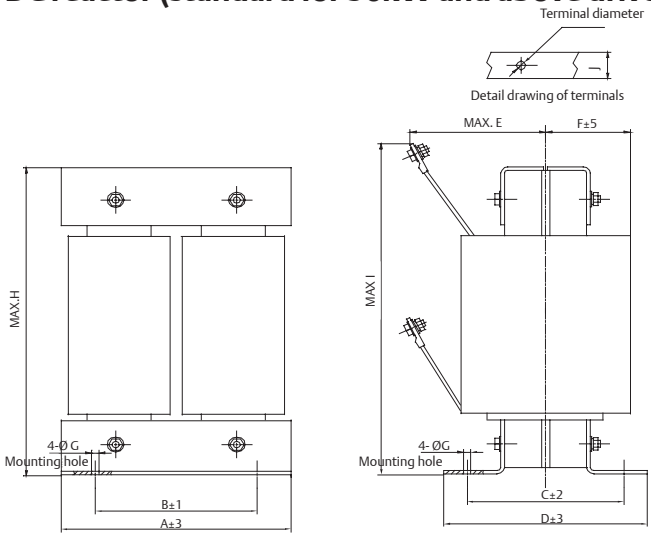

Applicable drive (kW)	DC reactor model	Recommended copper cable size(mm²)	Dimension(mm)											Gross Weight (kg)
			A	B	C	D	E	F	G	H	I	J	Terminal diameter	
90	TDL-4DI01-0900	60	190	160	125	161	120	80	10	250	280	25	ϕ12	23
110	TDL-4DI01-1100	100	190	160	125	161	120	80	10	250	280	25	ϕ12	25
132	TDL-4DI01-1320	150	200	170	135	171	120	85	10	260	280	30	ϕ12	28
160	TDL-4DI01-1600	150	210	180	135	171	130	85	12	280	320	30	ϕ12	32
200	TDL-4DI01-2200	200	220	190	135	171	150	90	12	315	340	40	ϕ15	40
220	TDL-4DI01-2200	250	220	190	135	171	150	90	12	315	340	40	ϕ15	40
280	TDL-4DI01-2800	325	220	190	145	181	160	95	12	315	340	40	ϕ15	45

1. Column B and C are the installation hole diameter for the DC reactor;
2. It is recommended to install DC reactor vertically at the bottom of the cabinet if it is installed inside a cabinet. The distance between the reactor and drive should be greater than 350mm, and the reactor should not block the drive's air inlet. If ventilation inside the cabinet is poor, it is recommended to implement forced air cooling to the reactor to prevent the ambient temperature from going too high.

Optional accessories

If following optional accessories are requested, please order them separately.

LCD keypad:

Order code: TDP-LCD03

Language: Chinese/English selectable

- LCD + LED displays
- Fast parameters backup and copy functions
- Hot pluggable

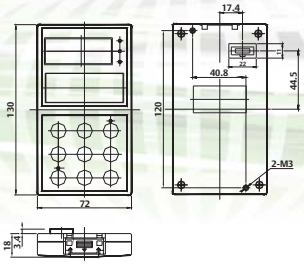

Keypad holder:

Order code: EVF-KB02

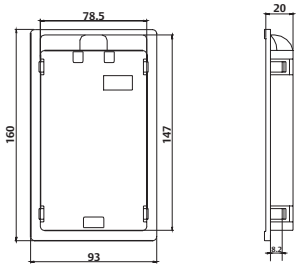

Keypad cable:

Order code: TDC-CB0015 (1.5m)
TDC-CB0030 (3.0m)

Remote controller (MODBUS Protocol):

Order code: EVO-RC03.

- Communicates with drive via standard RS485 comm.
- Maximum distance is up to 1000m
- One remote controller can control up to 32 drives by means of RS485 network

Communication cable of remote controller:

Order code: FRC21W1 (3.0m)
FRC21W2 (30m)

PROFIBUS field bus adapter:

Order code: TDS-PA01

DRIVING THE WORLD...

CONTROL TECHNIQUES

Control Techniques Drive & Application Centres

AUSTRALIA
Melbourne Application Centre
T: +613 973 81777
controltechniques.au@emerson.com

Sydney Drive Centre
T: +61 2 9838 7222
controltechniques.au@emerson.com

AUSTRIA
Linz Drive Centre
T: +43 7229 789480
controltechniques.at@emerson.com

BELGIUM
Brussels Drive Centre
T: +32 1574 0700
controltechniques.be@emerson.com

BRAZIL
São Paulo Application Centre
T: +55 11 3618 6688
controltechniques.br@emerson.com

CANADA
Toronto Drive Centre
T: +1 905 949 3402
controltechniques.ca@emerson.com

Calgary Drive Centre
T: +1 403 253 8738
controltechniques.ca@emerson.com

CHINA
Shanghai Drive Centre
T: +86 21 5426 0668
controltechniques.cn@emerson.com

Beijing Application Centre
T: +86 10 856 31122 ext 820
controltechniques.cn@emerson.com

CZECH REPUBLIC
Brno Drive Centre
T: +420 511 180111
controltechniques.cz@emerson.com

DENMARK
Copenhagen Drive Centre
T: +45 4369 6100
controltechniques.dk@emerson.com

FRANCE*
Angoulême Drive Centre
T: +33 5 4564 5454
controltechniques.fr@emerson.com

GERMANY
Bonn Drive Centre
T: +49 2242 8770
controltechniques.de@emerson.com

Chemnitz Drive Centre
T: +49 3722 52030
controltechniques.de@emerson.com

Darmstadt Drive Centre
T: +49 6251 17700
controltechniques.de@emerson.com

GREECE*
Athens Application Centre
T: +0030 210 57 86086/088
controltechniques.gr@emerson.com

HOLLAND
Rotterdam Drive Centre
T: +31 184 420555
controltechniques.nl@emerson.com

HONG KONG
Hong Kong Application Centre
T: +852 2979 5271
controltechniques.hk@emerson.com

INDIA
Chennai Drive Centre
T: +91 44 2496 1123/
2496 1130/2496 1083
controltechniques.in@emerson.com

Pune Application Centre
T: +91 20 2612 7956/2612 8415
controltechniques.in@emerson.com

New Delhi Application Centre
T: +91 112 2581 3166
controltechniques.in@emerson.com

IRELAND
Newbridge Drive Centre
T: +353 45 448200
controltechniques.ie@emerson.com

ITALY
Milan Drive Centre
T: +39 02575 751
controltechniques.it@emerson.com

Reggio Emilia Application Centre
T: +39 02575 751
controltechniques.it@emerson.com

Vicenza Drive Centre
T: +39 0444 933400
controltechniques.it@emerson.com

KOREA
Seoul Application Centre
T: +82 2 3483 1605
controltechniques.kr@emerson.com

MALAYSIA
Kuala Lumpur Drive Centre
T: +603 5634 9776
controltechniques.my@emerson.com

REPUBLIC OF SOUTH AFRICA
Johannesburg Drive Centre
T: +27 11 462 1740
controltechniques.za@emerson.com

Cape Town Application Centre
T: +27 21 556 0245
controltechniques.za@emerson.com

RUSSIA
Moscow Application Centre
T: +7 495 981 9811
controltechniques.ru@emerson.com

SINGAPORE
Singapore Drive Centre
T: +65 6891 7600
controltechniques.sg@emerson.com

SLOVAKIA
EMERSON A.S
T: +421 32 7700 369
controltechniques.sk@emerson.com

SPAIN
Barcelona Drive Centre
T: +34 93 680 1661
controltechniques.es@emerson.com

Bilbao Application Centre
T: +34 94 620 3646
controltechniques.es@emerson.com

Valencia Drive Centre
T: +34 96 154 2900
controltechniques.es@emerson.com

SWEDEN*
Stockholm Application Centre
T: +468 554 241 00
controltechniques.se@emerson.com

SWITZERLAND
Lausanne Application Centre
T: +41 21 637 7070
controltechniques.ch@emerson.com

Zurich Drive Centre
T: +41 56 201 4242
controltechniques.ch@emerson.com

TAIWAN
Taipei Application Centre
T: +886 22325 9555
controltechniques.tw@emerson.com

THAILAND
Bangkok Drive Centre
T: +66 2962 2092 99
controltechniques.th@emerson.com

TURKEY
Istanbul Drive Centre
T: +90 216 4182420
controltechniques.tr@emerson.com

UAE*
Emerson FZE
T: +971 4 8118100
ct.dubai@emerson.com

UNITED KINGDOM
Telford Drive Centre
T: +44 1952 213700
controltechniques.uk@emerson.com

USA
California Drive Centre
T: +1 562 943 0300
controltechniques.us@emerson.com

Charlotte Application Centre
T: +1 704 393 3366
controltechniques.us@emerson.com

Chicago Application Centre
T: +1 630 752 9090
controltechniques.us@emerson.com

Cleveland Drive Centre
T: +1 440 717 0123
controltechniques.us@emerson.com

Florida Drive Centre
T: +1 239 693 7200
controltechniques.us@emerson.com

Latin America Sales Office
T: +1 305 818 8897
controltechniques.us@emerson.com

Minneapolis US Headquarters
T: +1 952 995 8000
controltechniques.us@emerson.com

Oregon Drive Centre
T: +1 503 266 2094
controltechniques.us@emerson.com

Providence Drive Centre
T: +1 401 541 7277
controltechniques.us@emerson.com

Utah Drive Centre
T: +1 801 566 5521
controltechniques.us@emerson.com

Control Techniques Distributors

ARGENTINA
Euro Techniques SA
T: +54 11 4331 7820
eurotech@eurotechsa.com.ar

BAHRAIN
Emerson FZE
T: +971 4 8118100
ct.bahrain@emerson.com

BULGARIA
BLS - Automation Ltd
T: +359 32 968 007
info@blsautomation.com

CHILE
Ingeniería Y Desarrollo
Tecnológico S.A
T: +56 2 719 2200
rdunner@idt.cl

COLOMBIA
Sistronic LTDA
T: +57 2 555 60 00
luis.alvarez@sistronic.com.co

Redes Electricas S.A.
T: +57 1 364 7000
alvaro.rodriguez@redeselectricas.com

CROATIA
Zigg-Pro d.o.o
T: +385 1 3463 000
zigg-pro@zg.htnet.hr

CYPRUS
Acme Industrial Electronic
Services Ltd
T: +3572 5 332181
acme@cytanet.com.cy

EGYPT
Samiram
T: +202 29703868/+202 29703869
samiramz@samiram.com

EL SALVADOR
Servielectric Industrial S.A. de C.V.
T: +503 2278 1280
aeorellana@gruposervielectric.com

FINLAND
SKS Control
T: +358 207 6461
control@sks.fi

GUATEMALA
MICE, S.A.
T: +502 5510 2093
mice@itelgua.com

HONDURAS
Temtronics Honduras
T: +504 550 1801
temtronics@amnethn.com

HUNGARY
Control-VH Kft
T: +361 431 1160
info@controlvh.hu

ICELAND
Samey ehf
T: +354 510 5200
samey@samey.is

INDONESIA
Pt Apikon Indonesia
T: +65 6468 8979
info.my@controltechniques.com

Pt Yua Esa Sempurna Sejahtera
T: +65 6468 8979
info.my@controltechniques.com

ISRAEL
Dor Drives Systems Ltd
T: +972 3900 7595
info@dor1.co.il

KENYA
Kassam & Bros Co. Ltd
T: +254 2 556 418
kassambros@africaonline.co.ke

KUWAIT
Emerson FZE
T: +971 4 8118100
ct.kuwait@emerson.com

LATVIA
EMT
T: +371 760 2026
janis@emt.lv

LEBANON
Black Box Automation & Control
T: +961 1 443773
info@blackboxcontrol.com

LITHUANIA
Elinta UAB
T: +370 37 351 987
sales@elinta.lt

MALTA
Mekanika Limited
T: +35621 442 039
mfrancica@gasan.com

MEXICO
MELCSA S.A. de CV
T: +52 55 5561 1312
jcervera@melcsa.com

MOROCCO
Cietec
T: +212 22 354948
cietec@cietec.ma

NEW ZEALAND
Advanced Motor Control. Ph.
T: +64 (0) 274 363 067
info.au@controltechniques.com

PERU
Intech S.A.
T: +51 1 224 9493
artur.mujamed@intech-sa.com

PHILIPPINES
Control Techniques
Singapore Ltd
T: +65 6468 8979
info.my@controltechniques.com

POLAND
APATOR CONTROL Sp. z o.o
T: +48 56 6191 207
info@acontrol.com.pl

PORTUGAL
Harker Sumner S.A
T: +351 22 947 8090
drives.automation@harker.pt

PUERTO RICO
Motion Industries Inc.
T: +1 787 251 1550
roberto.diaz@motion-ind.com

QATAR
Emerson FZE
T: +971 4 8118100
ct.qatar@emerson.com

ROMANIA
C.I.T. Automatizari
T: +40212550543
office@citautomatizari.ro

SAUDI ARABIA
A. Abunayyan Electric Corp.
T: +9661 477 9111
aec-salesmarketing@
abunayyangroup.com

SERBIA & MONTENEGRO
Master Inzenjering d.o.o
T: +381 24 551 605
office@masterinzenjering.rs

SLOVENIA
PS Logatec
T: +386 1 750 8510
ps-log@ps-log.si

TUNISIA
SIA Ben Djemaa & CIE
T: +216 1 332 923
bendjemaa@planet.tn

URUGUAY
SECOIN S.A.
T: +5982 2093815
jose.barron@secoin.com.uy

VENEZUELA
Digimex Sistemas C.A.
T: +58 243 551 1634
digimex@digimex.com.ve

VIETNAM
NAM HUY
T: +84 437734500
namhuy.com.vn

* Operated by sister company

LEROY SOMER