Cat. No. I560-E1-03

OMRON

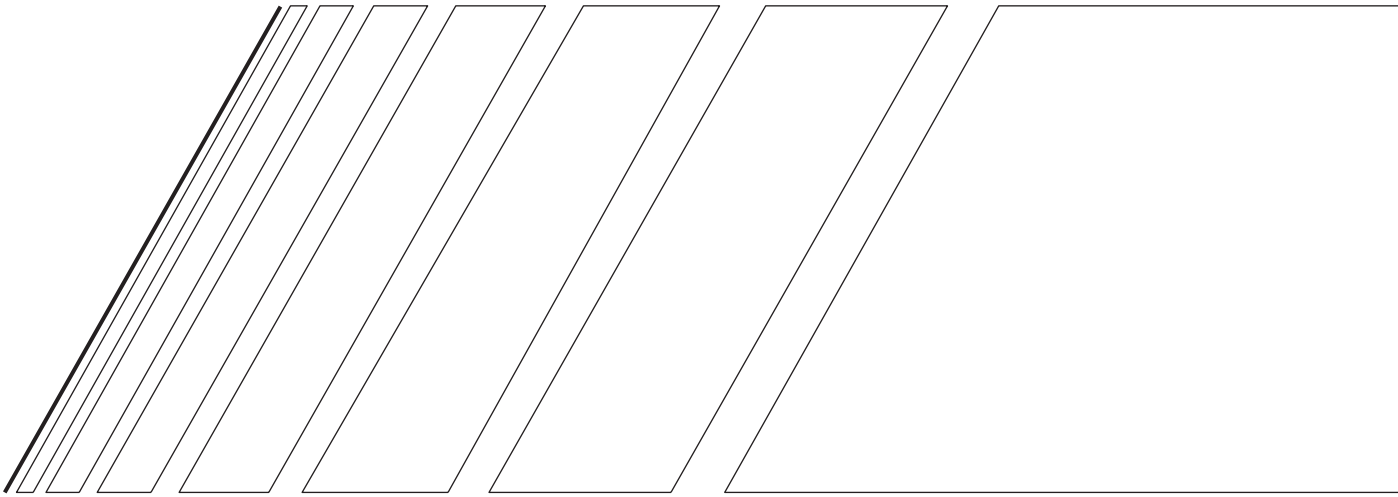

USER'S MANUAL

SYSDRIVE RX SERIES

High-function General-purpose Inverter

Introduction

Thank you for choosing the general-purpose Inverter 3G3RX Series. This User's Manual (hereinafter called "this manual") describes the parameter setting methods required for installation/ wiring and operation of the 3G3RX model, as well as troubleshooting and inspection methods.

- This manual should be delivered to the actual end user of the product.
- After reading this manual, keep it handy for future reference.
- This manual describes the specifications and functions of the product as well as the relations between them. You should assume that anything not described in this manual is not possible with the product.
- Intended readers
  This manual is intended for:
  Those with knowledge of the workings of electricity (qualified electric engineers or the equivalent), and also in charge of:
  • Introducing the control equipment
  • Designing the control system
  • Installing and/or connecting the control equipment
  • Field management

Read and Understand this Manual

Please read and understand this manual before using the product. Please consult your OMRON representative if you have any questions or comments.

Warranty and Limitations of Liability

WARRANTY
OMRON's exclusive warranty is that the products are free from defects in materials and workmanship for a period of one year (or other period if specified) from date of sale by OMRON. OMRON MAKES NO WARRANTY OR REPRESENTATION, EXPRESS OR IMPLIED, REGARDING NON-INFRINGEMENT, MERCHANTABILITY, OR FITNESS FOR PARTICULAR PURPOSE OF THE PRODUCTS. ANY BUYER OR USER ACKNOWLEDGES THAT THE BUYER OR USER ALONE HAS DETERMINED THAT THE PRODUCTS WILL SUITABLY MEET THE REQUIREMENTS OF THEIR INTENDED USE. OMRON DISCLAIMS ALL OTHER WARRANTIES, EXPRESS OR IMPLIED.

LIMITATIONS OF LIABILITY
OMRON SHALL NOT BE RESPONSIBLE FOR SPECIAL, INDIRECT, OR CONSEQUENTIAL DAMAGES, LOSS OF PROFITS OR COMMERCIAL LOSS IN ANY WAY CONNECTED WITH THE PRODUCTS, WHETHER SUCH CLAIM IS BASED ON CONTRACT, WARRANTY, NEGLIGENCE, OR STRICT LIABILITY. In no event shall the responsibility of OMRON for any act exceed the individual price of the product on which liability is asserted. IN NO EVENT SHALL OMRON BE RESPONSIBLE FOR WARRANTY, REPAIR, OR OTHER CLAIMS REGARDING THE PRODUCTS UNLESS OMRON'S ANALYSIS CONFIRMS THAT THE PRODUCTS WERE PROPERLY HANDLED, STORED, INSTALLED, AND MAINTAINED AND NOT SUBJECT TO CONTAMINATION, ABUSE, MISUSE, OR INAPPROPRIATE MODIFICATION OR REPAIR.

Application Considerations

SUITABILITY FOR USE

OMRON shall not be responsible for conformity with any standards, codes, or regulations that apply to the combination of products in the customer's application or use of the products.

At the customer's request, OMRON will provide applicable third party certification documents identifying ratings and limitations of use that apply to the products. This information by itself is not sufficient for a complete determination of the suitability of the products in combination with the end product, machine, system, or other application or use.

The following are some examples of applications for which particular attention must be given. This is not intended to be an exhaustive list of all possible uses of the products, nor is it intended to imply that the uses listed may be suitable for the products:

- Outdoor use, uses involving potential chemical contamination or electrical interference, or conditions or uses not described in this manual.
- Nuclear energy control systems, combustion systems, railroad systems, aviation systems, medical equipment, amusement machines, vehicles, safety equipment, and installations subject to separate industry or government regulations.
- Systems, machines, and equipment that could present a risk to life or property.

Please know and observe all prohibitions of use applicable to the products.

NEVER USE THE PRODUCTS FOR AN APPLICATION INVOLVING SERIOUS RISK TO LIFE OR PROPERTY WITHOUT ENSURING THAT THE SYSTEM AS A WHOLE HAS BEEN DESIGNED TO ADDRESS THE RISKS, AND THAT THE OMRON PRODUCTS ARE PROPERLY RATED AND INSTALLED FOR THE INTENDED USE WITHIN THE OVERALL EQUIPMENT OR SYSTEM.

PROGRAMMABLE PRODUCTS

OMRON shall not be responsible for the user's programming of a programmable product, or any consequence thereof.

Disclaimers

CHANGE IN SPECIFICATIONS

Product specifications and accessories may be changed at any time based on improvements and other reasons.

It is our practice to change model numbers when published ratings or features are changed, or when significant construction changes are made. However, some specifications of the products may be changed without any notice. When in doubt, special model numbers may be assigned to fix or establish key specifications for your application on your request. Please consult with your OMRON representative at any time to confirm actual specifications of purchased products.

DIMENSIONS AND WEIGHTS

Dimensions and weights are nominal and are not to be used for manufacturing purposes, even when tolerances are shown.

PERFORMANCE DATA

Performance data given in this manual is provided as a guide for the user in determining suitability and does not constitute a warranty. It may represent the result of OMRON's test conditions, and the users must correlate it to actual application requirements. Actual performance is subject to the OMRON Warranty and Limitations of Liability.

ERRORS AND OMISSIONS

The information in this manual has been carefully checked and is believed to be accurate; however, no responsibility is assumed for clerical, typographical, or proofreading errors, or omissions.

Safety Precautions

■Indications and Meanings of Safety Information

In this user's manual, the following precautions and signal words are used to provide information to ensure the safe use of the 3G3RX Inverter.
The information provided here is vital to safety. Strictly observe the precautions provided.

■Meanings of Signal Words

⚠ WARNING	Indicates an imminently hazardous situation which, if not avoided, is likely to result in serious injury or may result in death. Additionally there may be severe property damage.
⚠ CAUTION	Indicates a potentially hazardous situation which, if not avoided, may result in minor or moderate injury or in property damage.

■Alert Symbols in this Document

⚠ WARNING	
	Turn off the power supply and implement wiring correctly. Not doing so may result in a serious injury due to an electric shock.
	Wiring work must be carried out only by qualified personnel. Not doing so may result in a serious injury due to an electric shock.
	Do not change wiring and slide switches (SW1), put on or take off Digital Operator and optional devices, replace cooling fans while the input power is being supplied. Doing so may result in a serious injury due to an electric shock.
	Be sure to ground the unit. Not doing so may result in a serious injury due to an electric shock or fire. (200-V class: type-D grounding, 400-V class: type-C grounding)
	Do not remove the terminal block cover during the power supply and 10 minutes after the power shutoff. Doing so may result in a serious injury due to an electric shock.
	Do not operate the Digital Operator or switches with wet hands. Doing so may result in a serious injury due to an electric shock.
	Inspection of the Inverter must be conducted after the power supply has been turned off. Not doing so may result in a serious injury due to an electric shock. The main power supply is not necessarily shut off even if the emergency shutoff function is activated.

⚠ CAUTION	
	Do not connect resistors to the terminals (+1, P/+2, N/-) directly. Doing so might result in a small-scale fire, heat generation or damage to the unit.
	Install a stop motion device to ensure safety. Not doing so might result in a minor injury. (A holding brake is not a stop motion device designed to ensure safety.)
	Be sure to use a specified type of braking resistor/regenerative braking unit. In case of a braking resistor, install a thermal relay that monitors the temperature of the resistor. Not doing so might result in a moderate burn due to the heat generated in the braking resistor/regenerative braking unit. Configure a sequence that enables the Inverter power to turn off when unusual overheating is detected in the braking resistor/regenerative braking unit.
	The Inverter has high voltage parts inside which, if short-circuited, might cause damage to itself or other property. Place covers on the openings or take other precautions to make sure that no metal objects such as cutting bits or lead wire scraps go inside when installing and wiring.
	Do not touch the Inverter fins, braking resistors and the motor, which become too hot during the power supply and for some time after the power shutoff. Doing so may result in a burn.
	Take safety precautions such as setting up a molded-case circuit breaker (MCCB) that matches the Inverter capacity on the power supply side. Not doing so might result in damage to property due to the short circuit of the load.
	Do not dismantle, repair or modify this product. Doing so may result in an injury.

Precautions for Safe Use

■Installation and Storage

Do not store or use the product in the following places.

- Locations subject to direct sunlight.
- Locations subject to ambient temperature exceeding the specifications.
- Locations subject to relative humidity exceeding the specifications.
- Locations subject to condensation due to severe temperature fluctuations.
- Locations subject to corrosive or flammable gases.
- Locations subject to exposure to combustibles.
- Locations subject to dust (especially iron dust) or salts.
- Locations subject to exposure to water, oil, or chemicals.
- Locations subject to shock or vibration.

■Transporting, Installation, and Wiring

- Do not drop or apply strong impact on the product. Doing so may result in damaged parts or malfunction.
- Do not hold by the front cover and terminal block cover, but hold by the fins during transportation.
- Do not connect an AC power supply voltage to the control input/output terminals. Doing so may result in damage to the product.
- Be sure to tighten the screws on the terminal block securely.
  Wiring work must be done after installing the unit body.
- Do not connect any load other than a three-phase inductive motor to the U, V, and W output terminals.
- Take sufficient shielding measures when using the product in the following locations. Not doing so may result in damage to the product.
  Locations subject to static electricity or other forms of noise.
  Locations subject to strong magnetic fields.
  Locations close to power lines.

■Operation and Adjustment

- Be sure to confirm the permissible range of motors and machines before operation because the Inverter speed can be changed easily from low to high.
- Provide a separate holding brake if necessary.

■Maintenance and Inspection

- Be sure to confirm safety before conducting maintenance, inspection or parts replacement.

Precautions for Correct Use

■Installation

- Mount the product vertically on a wall with the product's longer sides upright.
  The material of the wall has to be noninflammable such as a metal plate.

■Main Circuit Power Supply

- Confirm that the rated input voltage of the Inverter is the same as AC power supply voltage.

■Error Retry Function

- Do not come close to the machine when using the error retry function because the machine may abruptly start when stopped by an alarm.
- Be sure to confirm the RUN signal is turned off before resetting the alarm because the machine may abruptly start.

■Non-Stop Function at Momentary Power Interruption

- Do not come close to the machine when selecting restart in the non-stop function at momentary power interruption selection (b050) because the machine may abruptly start after the power is turned on.

■Operation Stop Command

- Provide a separate emergency stop switch because the STOP key on the Digital Operator is valid only when function settings are performed.
- When checking a signal during the power supply and the voltage is erroneously applied to the control input terminals, the motor may start abruptly. Be sure to confirm safety before checking a signal.

■Product Disposal

- Comply with the local ordinance and regulations when disposing of the product.

Warning Labels

Warning labels are located on the Inverter as shown in the following illustration.
Be sure to follow the instructions.

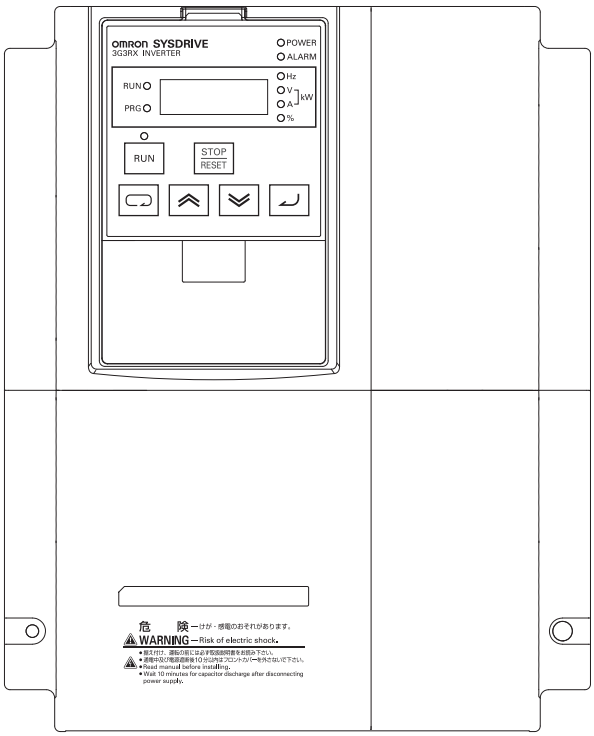

Warning Description

危険 けが・感電のおそれがあります。

WARNING Risk of electric shock.

- 据え付け、運転の前には必ず取扱説明書をお読み下さい。
- 通電中及び電源遮断後10分以内はフロントカバーを外さないで下さい。
- Read manual before installing.
- Wait 10 minutes for capacitor discharge after disconnecting power supply.

Checking Before Unpacking

■Checking the Product

On delivery, be sure to check that the delivered product is the Inverter 3G3RX model that you ordered.
Should you find any problems with the product, immediately contact your nearest local sales representative or OMRON sales office.

●Checking the Nameplate

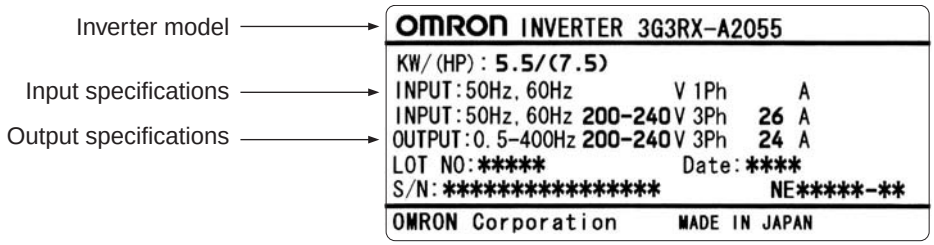

●Checking the Model

3 G 3 R X - A 2 0 5 5

Max. applicable motor capacity

004	0.4 kW	220	22 kW
007	0.75 kW	300	30 kW
015	1.5 kW	370	37 kW
022	2.2 kW	450	45 kW
037	3.7 kW	550	55 kW
055	5.5 kW	750	75 kW
075	7.5 kW	900	90 kW
110	11 kW	11K	110 kW
150	15 kW	13K	132 kW
185	18.5 kW		

Voltage class

2	3-phase 200 V AC (200-V class)
4	3-phase 400 V AC (400-V class)

Enclosure rating

A	Panel-mounting (IP10 min.) or closed wall-mounting models

■Checking the Accessories

Note that this manual is the only accessory included with the 3G3RX model.
Mounting screws and other necessary parts must be provided by the user.

Revision History

■A manual revision code appears as a suffix to the catalog number located at the lower left of the front and back covers.

Cat. No. I560-E1-03

Revision code

Revision code	Revision date	Changes and revision pages
01	December 2007	First printing
02	October 2008	■ New Inverters with different capacities added (3G3RX-A2004/-A2007/-A2015/-A2022/-A2037/-A4004/-A4007/-A4015/-A4022/-A4037) ■ Manual descriptions improved and/or corrected 1-1, 2-3,2-5,2-14,2-18,2-19,2-20,2-22, 3-11,3-20,3-26,3-32,3-33,3-36,3-38,3-43,3-44,3-46, 3-48,3-52,3-53 4-1,4-3,4-5,4-11,4-12,4-15,4-19,4-24,4-32,4-33,4-43, 4-49,4-52,4-57,4-58,4-59,4-65,4-74,4-84,4-86,4-89, 4-90,4-97,4-98,4-101,4-103,4-105,4-108,4-109,4-112, 4-116,4-118to138,4-145,4-150,4-151,4-152,4-153, 4-157,4-159,4-160,4-162,4-163,4-173,4-174,4-176, 4-178,4-182,4-183,4-184,4-188,4-189,4-191,4-193, 4-198,4-200,4-202,4-206,4-209,4-213 5-1to8,6-8 7-1,7-2,7-5,7-6,7-12to17,7-19to37,7-39,7-40,7-41 App-2,App-8,App-25
03	December 2008	■ New Inverters with different capacities added (3G3RX-A4750/-A4900/-A411K/-A413K) ■ Manual descriptions improved and/or corrected 1-2,3-33,3-54,4-25,4-47,4-51,5-1,5-2,5-4,5-5,5-6,7-22

About This Manual

This User's Manual is compiled chapter by chapter for user's convenience as follows. Understanding the following configuration ensures more effective use of the product.

	Overview
Chapter 1 Overview	Describes features and names of parts.
Chapter 2 Design	Provides external dimensions, installation dimensions, peripheral device design/selection instructions, and other information necessary for design.
Chapter 3 Operation	Describes names of parts, the Inverter's operations, including how to use the keys on the Digital Operator, and the monitor function.
Chapter 4 Functions	Describes the functions of the Inverter.
Chapter 5 Maintenance Operations	Describes the causes and their countermeasures if the Inverter fails, including the solutions to possible troubles (troubleshooting).
Chapter 6 Inspection and Maintenance	Describes items for periodical inspection and/or maintenance for the Inverter.
Chapter 7 Specifications	Provides Inverter specifications, as well as the specifications and dimensions of peripheral devices.
Appendix	Describes the summarized parameter settings as a reference for users who have used this Inverter and understood the functions.

Contents

Introduction 1
Read and Understand this Manual 2
Safety Precautions 5
Precautions for Safe Use 7
Precautions for Correct Use 8
Checking Before Unpacking 10
Revision History 11
About This Manual 12

Chapter 1 Overview

1-1 Functions 1-1
1-2 Appearance and Names of Parts 1-4

Chapter 2 Design

2-1 Installation 2-1
2-2 Wiring 2-6

Chapter 3 Operation

3-1 Operation Method 3-3
3-2 Test Run Procedure 3-5
3-3 Test Run Operation 3-6
3-4 Part Names and Descriptions of the Digital Operator 3-9
3-5 Keys 3-12
3-6 Parameter Transition 3-13
3-7 Parameter List 3-19

Chapter 4 Functions

4-1 Monitor Mode 4-1
4-2 Function Mode 4-8
4-3 Functions When Option PG Board (3G3AX-PG01) Is Used 4-118
4-4 Communication Function 4-139

Chapter 5 Maintenance Operations

5-1 Protective Functions and Troubleshooting 5-1
5-2 Warning Function 5-10

Chapter 6 Inspection and Maintenance

6-1 Inspection and Maintenance 6-1

Chapter 7 Specifications

7-1 Standard Specification List 7-1

Contents

7-2 Dimensional Drawing 7-6
7-3 Options 7-14

Appendix

Appendix-1 Parameter List App-1
Appendix-2 Product Life Curve App-41
Appendix-3 Life Alarm Output App-42

Index

Chapter 1

Overview

1-1 Functions 1-1
1-2 Appearance and Names of Parts 1-4

1-1 Functions

3G3RX Inverter Models

Rated voltage	Enclosure rating	Max. applicable motor capacity	Model
3-phase 200 V AC	IP20 (Complies with JEM1030)	0.4 kW	3G3RX-A2004
		0.75 kW	3G3RX-A2007
		1.5 kW	3G3RX-A2015
		2.2 kW	3G3RX-A2022
		3.7 kW	3G3RX-A2037
		5.5 kW	3G3RX-A2055
		7.5 kW	3G3RX-A2075
		11 kW	3G3RX-A2110
		15 kW	3G3RX-A2150
		18.5 kW	3G3RX-A2185
		22 kW	3G3RX-A2220
		30 kW	3G3RX-A2300
		37 kW	3G3RX-A2370
		45 kW	3G3RX-A2450
		55 kW	3G3RX-A2550
3-phase 400 V AC		0.4 kW	3G3RX-A4004
		0.75 kW	3G3RX-A4007
		1.5 kW	3G3RX-A4015
		2.2 kW	3G3RX-A4022
		3.7 kW	3G3RX-A4037
		5.5 kW	3G3RX-A4055
		7.5 kW	3G3RX-A4075
		11 kW	3G3RX-A4110
		15 kW	3G3RX-A4150
		18.5 kW	3G3RX-A4185
		22 kW	3G3RX-A4220
		30 kW	3G3RX-A4300
		37 kW	3G3RX-A4370
		45 kW	3G3RX-A4450
		55 kW	3G3RX-A4550
		75 kW	3G3RX-A4750
		90 kW	3G3RX-A4900
		110 kW	3G3RX-A411K
		132 kW	3G3RX-A413K

International Standards Models (EC Directives and UL/cUL Standards)

The 3G3RX Inverter meets the EC Directives and UL/cUL standard requirements for worldwide use.

Classification		Applicable standard
EC Directives	EMC Directive	EN61800-3: 2004
	Low-voltage Directive	EN61800-5-1: 2003
UL/cUL Standards		UL508C

Human-/Environment-friendly, High-performance, General-purpose Inverters Suitable for Various Advanced Applications

■High Performance

High Starting Torque

With the vector control and auto-tuning functions, the 3G3RX Series has achieved high starting torque in excess of 200% at 0.3 Hz.

Trip Suppression

This Inverter features two trip suppression functions: "Overcurrent trip suppression function" to suppress overcurrent trip during acceleration, and "Overvoltage suppression function during deceleration" to suppress overvoltage trip during deceleration. Therefore, the 3G3RX Series provides tough operational capabilities regardless of the severe time setting of acceleration and deceleration.

■Various Applications

Sensor-less Vector Control at 0 Hz

The 3G3RX Series provides sensor-less vector control, which is useful for up/down applications. It can provide a high torque of 150%, even at a speed reference of 0 Hz (150% torque is available when the Inverter capacity is increased by one rank). This function contributes to simplification of control programs and extension of the service life of the brake.

Emergency Shutoff Function

Switching the internal slide switch (SW1) changes the multi-function input terminal (S3) to the emergency shutoff input. The power module that controls the motor is shutoff directly without operating software.

Built-in Braking Circuit (up to 22 kW)

The Inverter models with 22 kW or lower capacity incorporate a braking transistor, enabling space-saving configuration for applications that need rapid acceleration and stop.

Restart Speed Search Function

For a free-running motor (e.g. a fan motor), this function checks the direction of rotation and frequency, enabling smooth restart of the motor.

High-torque Multi-operation

The 3G3RX Series enables balanced torque control for the whole system, in proportion to multiple motor loads.

Deceleration Stop During Power Failure

During a power failure or momentary power interruption, the 3G3RX Series can decelerate and stop a motor by using the motor braking energy.

■Human-/Environment-friendly Features

More Simplified Parameter Settings and View

- Only parameters that have been changed from the default settings can be viewed.
- With the user setting function, only 12 parameters for frequent use can be viewed.

Compliance With Safety Standards

The 3G3RX Series meets the requirements of the CE and UL/cUL and complies with various standards.

The RoHS Directive

The standard model meets the requirements of the RoHS Directive.

Easily Meets the Requirements Specified by the Ministry of Land, Infrastructure and Transport of Japan

The 3G3RX Series incorporates a zero-phase reactor (radio noise filter) as a standard specification. When an optional DC reactor is added, the 3G3RX Series meets the requirements specified by the Ministry of Land, Infrastructure and Transport of Japan.

1-2 Appearance and Names of Parts

When the product is unpacked, it appears as below. (Example of 3G3RX-A2150/A4150 to A2220/A4220)

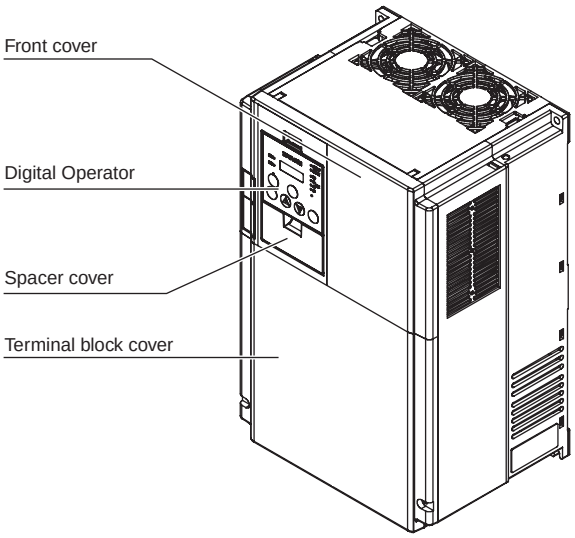

Open the terminal block cover and you can connect cables to the main circuit terminal block, as well as the control circuit terminal block.
Also, open the front cover and you can mount the optional board.

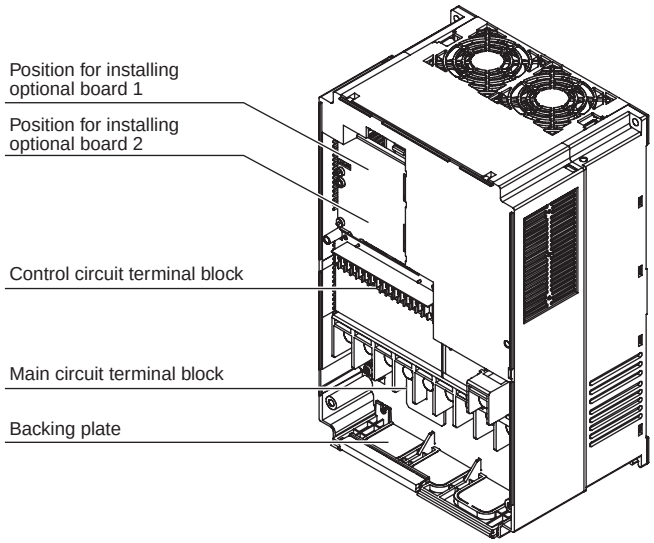

Chapter 2

Design

2-1 Installation 2-1
2-2 Wiring 2-6

2-1 Installation

⚠ WARNING	
	Turn off the power supply and implement wiring correctly. Not doing so may result in a serious injury due to an electric shock.
	Wiring work must be carried out only by qualified personnel. Not doing so may result in a serious injury due to an electric shock.
	Do not change wiring and slide switches (SW1), put on or take off Digital Operator and optional devices, replace cooling fans while the input power is being supplied. Doing so may result in a serious injury due to an electric shock.
	Be sure to ground the unit. Not doing so may result in a serious injury due to an electric shock or fire. (200-V class: type-D grounding, 400-V class: type-C grounding)

⚠ CAUTION	
	Do not connect resistors to the terminals (+1, P/+2, N/-) directly. Doing so might result in a small-scale fire, heat generation or damage to the unit.
	Install a stop motion device to ensure safety. Not doing so might result in a minor injury. (A holding brake is not a stop motion device designed to ensure safety.)
	Be sure to use a specified type of braking resistor/regenerative braking unit. In case of a braking resistor, install a thermal relay that monitors the temperature of the resistor. Not doing so might result in a moderate burn due to the heat generated in the braking resistor/regenerative braking unit. Configure a sequence that enables the Inverter power to turn off when unusual overheating is detected in the braking resistor/regenerative braking unit.
	The Inverter has high voltage parts inside which, if short-circuited, might cause damage to itself or other property. Place covers on the openings or take other precautions to make sure that no metal objects such as cutting bits or lead wire scraps go inside when installing and wiring.

Safety Information

■Installation and Storage

Do not store or use the product in the following places.

- Locations subject to direct sunlight.
- Locations subject to ambient temperature exceeding the specifications.
- Locations subject to relative humidity exceeding the specifications.
- Locations subject to condensation due to severe temperature fluctuations.
- Locations subject to corrosive or flammable gases.
- Locations subject to exposure to combustibles.
- Locations subject to dust (especially iron dust) or salts.
- Locations subject to exposure to water, oil, or chemicals.
- Locations subject to shock or vibration.

■Transporting, Installation, and Wiring

- Do not drop or apply strong impact on the product. Doing so may result in damaged parts or malfunction.
- Do not hold by the front cover and terminal block cover, but hold by the fins during transportation.
- Do not connect an AC power supply voltage to the control input/output terminals. Doing so may result in damage to the product.
- Be sure to tighten the screws on the terminal block securely.
  Wiring work must be done after installing the unit body.
- Do not connect any load other than a three-phase inductive motor to the U, V, and W output terminals.
- Take sufficient shielding measures when using the product in the following locations. Not doing so may result in damage to the product.
  Locations subject to static electricity or other forms of noise.
  Locations subject to strong magnetic fields.
  Locations close to power lines.

Precautions for Use

■Installation

- Install the Inverter vertically on the wall.
  Install the Inverter on a nonflammable wall surface material, like metal.

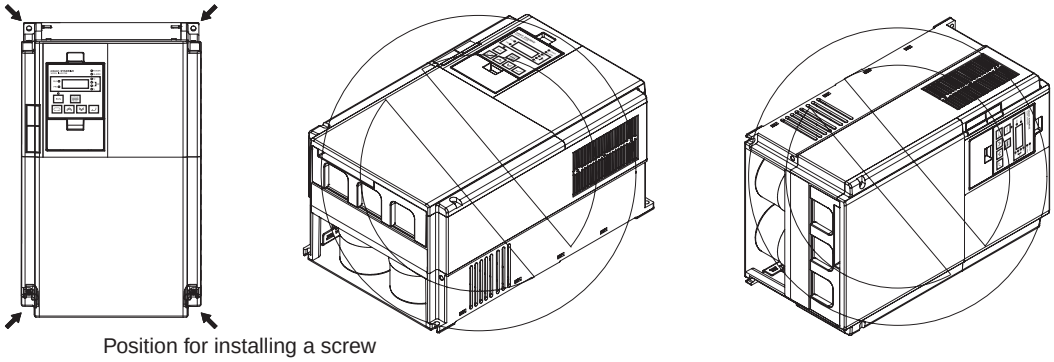

Position for installing a screw

■Main Circuit Power Supply

- Confirm that the rated input voltage of the Inverter matches the AC power supply voltage.

■Installation Environment

- Increased ambient temperatures will shorten the life of the Inverter.
- Keep the Inverter away from heating elements (such as a braking resistor, DC reactor, etc.).
  If the Inverter is installed in an enclosure, keep the ambient temperature within the range of the specifications, taking dimensions and ventilation into consideration.

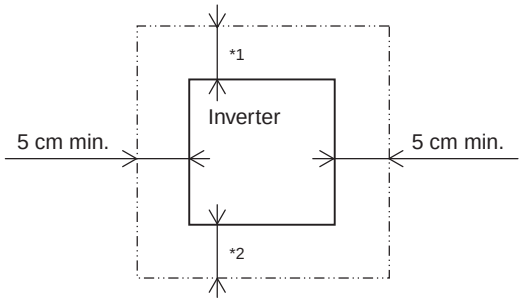

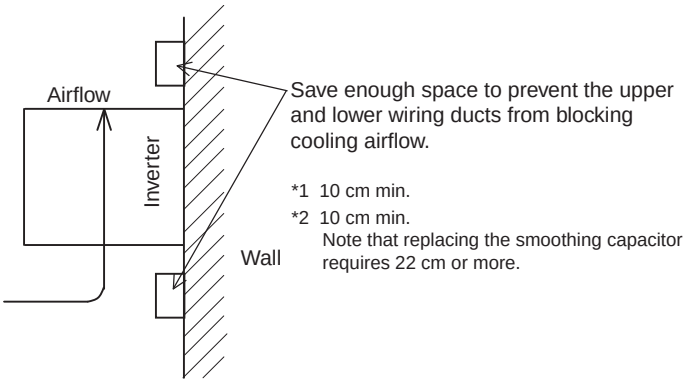

- When several 3G3RX models are installed in an enclosure and a ventilation fan is mounted in the enclosure, be careful about the layout of the Inverters and the air intake apertures.
  Depending on the internal layout of the panel, the Inverter's cooling effect may deteriorate, resulting in an increase in ambient temperature.
  Also, use thorough caution in making sure that the Inverter's ambient temperature is within the allowable operating temperature range.

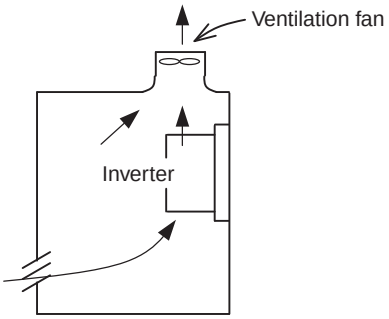

(Correct example)

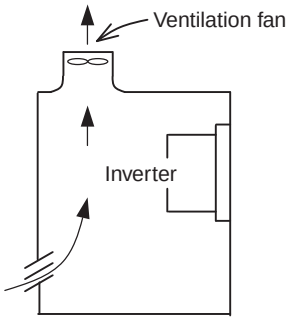

(Incorrect example)

- Before installing the Inverter, place a cover over all the ventilation openings to shield them from foreign objects.
  After completing the installation process, be sure to remove the covers from the Inverter before operation.

- Below is the heat radiation according to the Inverter capacity.

Inverter capacity (kw)	0.4	0.75	1.5	2.2	3.7	5.5	7.5	11	15	18.5
Load with 70% loss (W)	64	76	102	127	179	242	312	435	575	698
Load with 100% loss (W)	70	88	125	160	235	325	425	600	800	975
Efficiency at rated output (%)	85.1	89.5	92.3	93.2	94.0	94.4	94.6	94.8	94.9	95.0

Inverter capacity (kw)	22	30	37	45	55	75	90	110	132
Load with 70% loss (W)	820	1100	1345	1625	1975	2675	3375	3900	4670
Load with 100% loss (W)	1150	1550	1900	2300	2800	3800	4800	5550	6650
Efficiency at rated output (%)	95.0	95.0	95.1	95.1	95.1	95.2	95.2	95.2	95.2

• To raise the carrier frequency, reduce the output current (or derate the rated current) as shown in the graph below.

Voltage	200-V class		400-V class	
Capacity	Max. fc (kHz)	Derating at fc = 15 kHz	Max. fc (kHz)	Derating at fc = 15 kHz (75 to 132 kW is for 10 kHz)
0.4 kW	15	100%	15	100%
0.75 kW	15	100%	15	100%
1.5 kW	15	100%	15	100%
2.2 kW	15	100%	15	100%
3.7 kW	15	100%	15	100%
5.5 kW	15	100%	15	100%
7.5 kW	15	100%	15	100%
11 kW	12	90% (41.4 max.)	15	100%
15 kW	12	95% (60.8 A max.)	14	95% (30.4 A max.)
18.5 kW	10	90% (68.4 A max.)	10	90% (34.2 A max.)
22 kW	7	70% (66.5 A max.)	6	75% (36.0 A max.)
30 kW	5	80% (96.8 A max.)	10	75% (43.5 A max.)
37 kW	10	75% (108.7 A max.)	8	80% (60.0 A max.)
45 kW	5	70% (127.4 A max.)	9	75% (68.2 A max.)
55 kW	5	70% (154 A max.)	6	60% (67.2 A max.)
75 kW	—	—	6	85% (126.7 A max.)
90 kW	—	—	4	75% (132.0 A max.)
110 kW	—	—	6	70% (151.9 A max.)
132 kW	—	—	3	60% (156.0 A max.)

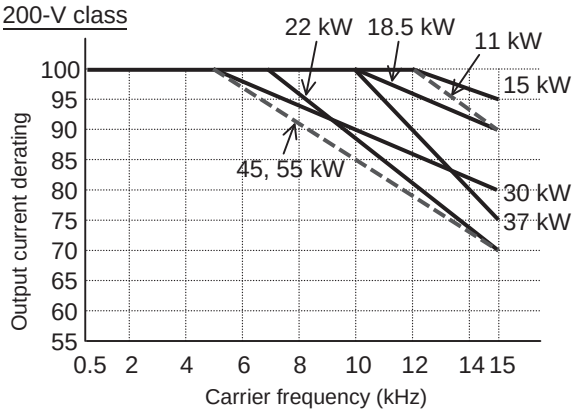

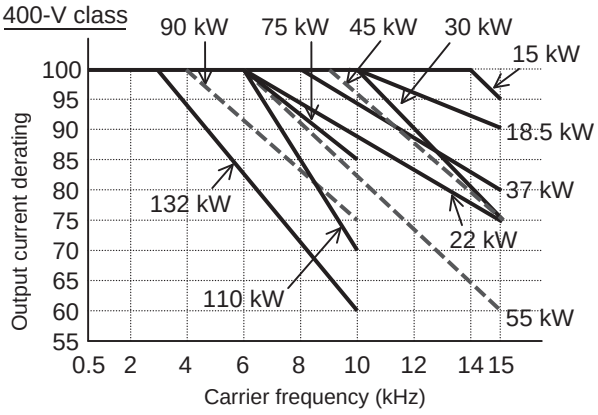

Backing Plate

■ Inverter with 22 kW or Lower Capacity

When running cables, cut the points between the backing plate and unnecessary portions with nippers or a wire cutter, and remove.

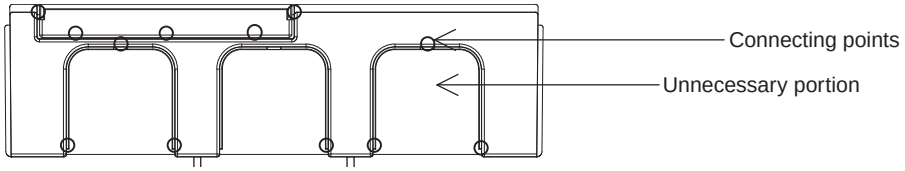

■ Inverter with 30 kW or Higher Capacity

For Connection Without Cable Conduit

Make a cut in the rubber bushing of the backing plate with nippers or a wire cutter, and insert a cable.

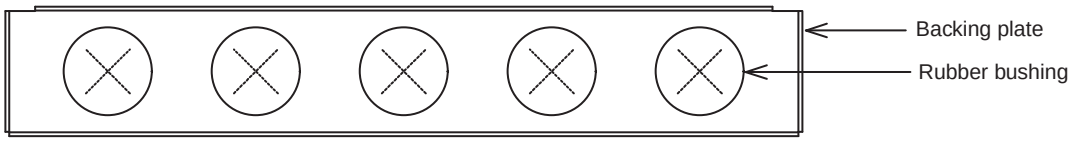

For Connection With Cable Conduit

Remove the rubber bushing from the conduit connecting portions, and connect the cable conduit.

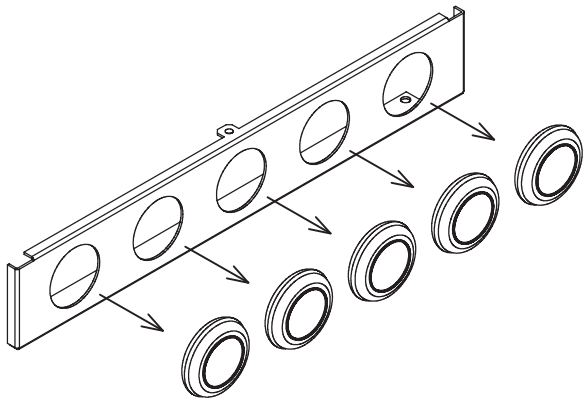

* Do not remove the rubber bushing unless you connect a cable conduit.
Otherwise, the cable sheath may be damaged by the inner edge of the backing plate, resulting in short-circuit or ground fault.

2-2 Wiring

Standard Connection Diagram

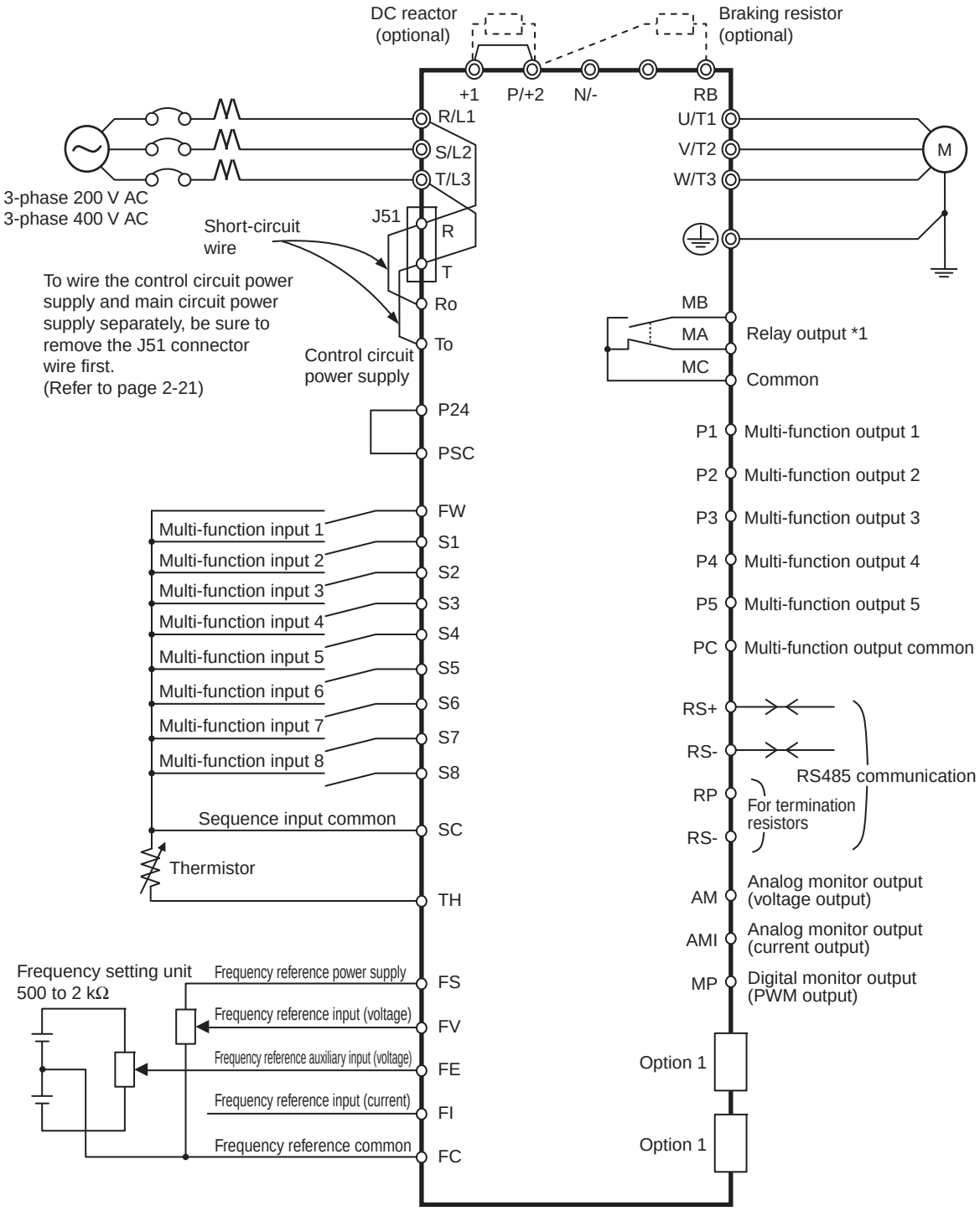

*1. By default, MA is set to NC contact, and MB to NO contact in the relay output (MA, MB) contact selection (C036).

■ Main Circuit Terminals

Terminal symbol	Terminal name	Description
R/L1, S/L2, T/L3	Main power supply input terminal	Connect the input power supply.
U/T1,V/T2, W/T3	Inverter output terminal	Connect to the 3-phase motor.
+1, P/+2	External DC reactor terminal	Remove the short-circuit bar between terminals "+1" and "P/+2", and connect the optional power factor improvement DC reactor.
P/+2, RB	Braking resistor connection terminals	Connect optional external braking resistors. (The RB terminal is provided for the Inverters with 22 kW or lower capacity.)
P/+2, N/-	Regenerative braking unit connection terminal	Connect optional regenerative braking units.
G	Ground terminal	Inverter case ground terminal. Connect this terminal to the ground. type-D (200-V class), type-C (400-V class)

■ Control Circuit Terminal

		Terminal symbol	Terminal name	Description	Specifications
Analog	Frequency reference input	FS	Frequency reference power supply output	+10 V DC power supply for the FV terminal.	Allowable load current: 20 mA max.
		FV	Frequency reference input (Voltage directive)	With a 0 to 10 V DC voltage input, the frequency reaches the maximum at 10 V. Set at A014 if the maximum frequency needs to be achieved at lower than 10 V.	Input impedance 10 kΩ Allowable input voltage range: -0.3 to +12 V DC
		FE	Auxiliary frequency reference input (Voltage directive)	With a 0 to ±10 V DC voltage input, the FE signal is added to the frequency reference signal of the FV or FI terminal. By changing the setting, the frequency reference can be input even with the FE terminal independently.	Input impedance 10 kΩ Allowable input voltage range: 0 to ±12 V DC
		FI	Frequency reference input (Current directive)	With a 4 to 20 mA DC current input, the maximum frequency is set at 20 mA. The FI signal is only active when the AT terminal is ON. Allocate the AT function to the multi-function input terminal.	Input impedance 100 Ω Allowable max. current: 24 mA
		FC	Frequency reference common	Common terminal for the frequency setting signals (FV, FE and FI) and the analog output terminals (AM and AMI). Do not connect this terminal to the ground.	

Continued to the next page

		Terminal symbol	Terminal name	Description	Specifications
Analog	Monitor output	AM	Multi-function analog output (Voltage)	This terminal outputs a signal selected from the "0 to 10 V DC Voltage Output" monitor items: Output frequency, Output current, Output torque (with/without sign), Output voltage, Input power, Electronic thermal load rate, LAD frequency, Motor temperature, and Fin temperature.	Allowable max. current: 2 mA
		AMI	Multi-function analog output (Current)	This terminal outputs a signal selected from the "4 to 20 mA DC Current Output" monitor items: Output frequency, Output current, Output torque (without sign), Output voltage, Input power, Electronic thermal load rate, LAD frequency, Motor temperature, and Fin temperature.	Allowable load impedance: 250 Ω max.
Digital (contact)	Monitor output	MP	Multi-function digital output	This terminal outputs a signal selected from the "0 to 10 V DC Voltage Output (PWM)" monitor items: Output frequency, Output current, Output torque (without sign), Output voltage, Input power, Electronic thermal load rate, LAD frequency, Motor temperature, Fin temperature, Digital output frequency, and Digital current monitor. "Digital output frequency", and "Digital current monitor" output a digital pulse at 0/10 V DC pulse voltage and 50% duty ratio.	Allowable max. current: 1.2 mA Max. frequency: 3.6 kHz
	Power supply	P24	Internal 24 V DC	24 V DC power supply for contact input signal. When the source logic is selected, this terminal functions as the contact input common terminal.	Allowable max. output current: 100 mA
		SC	Input common	Common terminal for the interface power supply P24 terminal, thermistor input TH terminal and digital monitor MP terminal. When the sink logic is selected, this terminal functions as the contact input common terminal. Do not connect this terminal to the ground.	

Continued to the next page

			Terminal symbol	Terminal name	Description	Specifications
Digital (contact)	Contact input	RUN command	FW	Forward rotation command terminal	When the FW signal is ON, the motor runs forward. When it is OFF, the motor decelerates and stops.	[Contact input ON condition] Voltage between each input terminal and the PSC terminal: 18 V DC or more Input impedance between each input terminal and the PSC terminal: 4.7 kΩ Allowable max. voltage: Voltage between each input terminal and the PSC terminal: 27 V DC Load current at 27 V DC power supply voltage: Approx. 5.6 mA
		Function / Selection	S1 S2 S3 S4 S5 S6 S7 S8	Multi-function input	Select 8 functions from among the 61 functions and allocate them to terminals S1 to S8. Note: Only terminals S1 and S3 can be used for the emergency shutoff function. For details, refer to "Emergency Shutoff Function" (page 2-10).	
			PSC	Multi-function input common	The sink and source logic for contact input can be switched by connecting a short-circuit bar on the control terminal block. Short-circuiting P24 and SC ⇒ Sink logic, Short-circuiting SC and PSC ⇒ Source logic To activate contact input via an external power supply, remove the short-circuit bar and connect PSC terminal to the external interface circuit.	
	Open collector output	Status / Factor	P1 P2 P3 P4 P5	Multi-function output	Select 5 functions from among 45, and allocate them to terminals P1 through P5. If an alarm code is selected in C062, terminals P1 to P3, or terminals P1 to P4 always output an alarm factor code (e.g. Inverter trip). The signal between each terminal and PC always corresponds to the sink or source logic.	Between each terminal and PC Voltage drop 4 V max. at power-on Max. allowable voltage: 27 V DC Max. allowable current: 50 mA
			PC	Multi-function output common	Common terminals for multi-function output terminals P1 to P5.	

Continued to the next page

			Terminal symbol	Terminal name	Description	Specifications
Digital (contact)	Relay output	Status, alarm, etc.	MA MB	Relay output	Select the desired functions from among 45 functions, and allocate them. SPDT contact output. By factory default, the relay output (MA, MB) contact selection (C036) is set at NC contact between MA-MC, and NO contact between MB-MC.	Contact max. capacity MA-MC 250 V AC, 2 A (Resistance) 0.2 A (Induction) MB-MC 250 V AC, 1 A (Resistance) 0.2 A (Induction) Contact min. capacity 100 V AC, 10 mA 5 V DC, 100 mA
			MC	Relay output common		
Analog	Analog input	Sensor	TH	External thermistor input Terminal	Connect an external thermistor to this terminal, to trip the Inverter when a temperature error occurs. The SC terminal functions as the common terminal. [Recommended thermistor characteristics] Allowable rated power: 100 mW min. Impedance at temperature error: 3 kΩ Temperature error detection level is adjustable between 0 and 9999 Ω.	Allowable input voltage range 0 to 8 V DC [Input circuit] 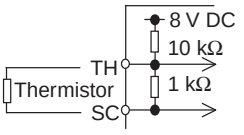

■Slide Switch (SW1) Settings

The built-in slide switch is used to enable or disable the emergency shutoff function. (Factory Default: Disabled)

* For the location of the slide switch, refer to (page 2-12).

Emergency Shutoff Function (Factory Default: Disabled)

- This function is intended to turn off the Inverter output (stop switching the main element) via only the multi-function input terminal of the hardware circuit without going through the CPU software.

* This function stops switching of the main element.The circuit is not electrically turned off. While the power supply is ON, do not touch the Inverter terminals and power cable (e.g. motor cable). Doing so may result in electric shock, injury or ground fault.

- When this function is enabled, the multi-function input terminals S1 and S3 are exclusively used for this function. No other function can be allocated to these terminals. If another function has been allocated, it will automatically be disabled, and terminals S1 and S3 are changed to the emergency shutoff terminals.

Function of multi-function input terminal S1

Reset signal (RS) / NO contact (Fixed)

This signal is used to reset the Inverter, and to reset the emergency shutoff trip [E37.*].

Function of multi-function input terminal S3

Emergency shutoff signal (EMR) / NC contact (Fixed)

This signal is used to turn off the Inverter output without using the built-in CPU.

With this signal input, the Inverter activates an emergency shutoff trip [E37. *].

* If multi-function input terminal S3 has not been connected or disconnected, or if the signal logic is not matched, the Inverter activates an emergency shutoff trip [E37. *]. After checking the cable connection and the signal logic, input the reset signal (RS).
Emergency shutoff trip [E37. *] can be reset only by the reset signal (RS) via multi-function input terminal S1. (It cannot be reset with the Digital Operator.)
• To enable this function, set the slide switch SW1 lever in the Inverter to [ON].
(With the factory default setting, slide switch SW1 is [OFF]. [This function is disabled.])

* Before operating slide switch SW1, make sure that the input power supply is OFF.

Slide switch SW1 setting and status of multi-function input terminals S1 and S3								
Slide switch (SW1) setting	Multi-function input terminal S1				Multi-function input terminal S3			
	Multi-function input 1 selection [C001]		Multi-function input 1 operation selection [C011]*1		Multi-function input 3 selection [C003]		Multi-function input 3 operation selection [C013]*1 *2	
SW1 OFF Emergency shutoff: Disabled (factory default)	[Can be selected randomly] *4		[Can be selected randomly] *4		[Can be selected randomly] *4		[Can be selected randomly] *4	
	Factory default	01 (RV)	Factory default	00 (NO)	Factory default	12 (EXT)	Factory default	00 (NO)
SW1 ON Emergency shutoff: Enabled *5	Automatic allocation to multi-function input terminals S1 and S3, and the input terminal with 18 (RS) setting *3							
	Fixed function (Cannot be changed)	18 (RS)	Fixed function (Cannot be changed)	00 (NO)	Fixed function (Cannot be changed)	64 (EMR)	Fixed function (Cannot be changed)	01 (NC)
Turning SW1 on, and then off Emergency shutoff: Disabled *3 *5	[Can be selected randomly] *4		[Can be selected randomly] *4		[Can be selected randomly] *4		[Can be selected randomly] *4	
	Holds setting while SW1 is ON.	18 (RS)	Holds setting while SW1 is ON.	00 (NO)	Emergency shutoff function: Reset	no (no allocation)	Holds setting while SW1 is ON.	01 (NC)

*1. With the terminal with input terminal selection [18 (RS)], NO/NC selection is fixed to [00 (NO)].
*2. When [C003] is [64 (EMR)], [C013] is fixed to [01 (NC)].
*3. If [18 (RS)] has been allocated to a multi-function input terminal (except for S3) other than S1 before switch SW1 is set to "ON", the input terminal selection for the relevant terminal will be automatically changed to "no (no allocation)" by setting SW1 to "ON". This is done in order to prevent duplicated allocation of this function. Then, even if SW1 is reset to [OFF], the initial allocation cannot be restored. Re-allocate the terminal function.

Example) When the multi-function input terminal S2 [C002] is [18 (RS)], setting SW1 to [ON] changes the [C002] setting to [no (no allocation)]. [18 (RS)] will be allocated to the multi-function input terminal S1 [C001].
Then, even if SW1 is reset to [OFF], the multi-function input terminal S2 [C002] setting is [no (no allocation)], and the multi-function input terminal S1 [C001] setting is [18 (RS)].

*4. Input terminal selection [64 (EMR)] cannot be selected with the Digital Operator. When slide switch SW1 is set to [ON], this function will be automatically allocated.

*5. Once slide switch SW1 is set to [ON], allocation of multi-function input terminals S1 and S3 will not be restored, even if SW1 is reset to [OFF] afterward. Re-allocate the terminal function.

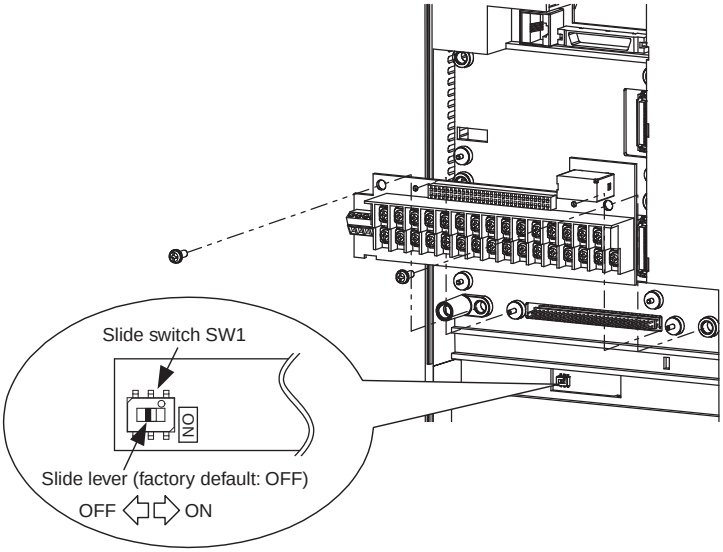

Wiring the Main Circuit Terminals

■Main Power Supply Input Terminals (R/L1, S/L2, T/L3)

- Use an earth leakage breaker for circuit (wiring) protection between the power supply and the main power supply terminals (R/L1, S/L2, T/L3).
- An earth leakage breaker may malfunction due to the effect of high frequency. Use an earth leakage breaker with a large high-frequency sensitivity current rating.
- If the Inverter protection function is activated, a malfunction or accident may have occurred to your system. Connect a magnetic contactor to turn off the Inverter power supply.
- Do not start or stop the Inverter by switching ON/OFF the magnetic contactor connected on the Inverter power supply input (primary) side and output (secondary) side.
  To start or stop the Inverter via an external signal, use the operation command (FW or RV) on the control circuit terminal block.
- This Inverter uses a 3-phase power supply. A single-phase power supply cannot be used.
- Do not use this Inverter with a phase loss power input. Doing so may damage the Inverter.
  By factory default, the phase loss input protection is disabled. If a phase of power supply input is interrupted, the Inverter reverts to the following status:

R-phase or T-phase is interrupted:	The Inverter does not operate.
S-phase is interrupted:	The Inverter reverts to single-phase operation, causing a trip (due to undervoltage, overcurrent, etc.) or damage to the Inverter.

Even if the power input is under a phase loss condition, the internal capacitor is charged with voltage, causing an electric shock or injury.
When changing the cable connections, refer to the instructions on page 2-1.

- In the following cases, the internal converter module may be damaged. Use caution to avoid them:
  Imbalance of power supply voltage is 3% or more.
  Power supply capacity is ten times or more than the Inverter capacity, and also 500 kVA or more.
  Rapid change in power supply voltage.

  Example) When several Inverters are connected with a short bus.
  When the phase advance capacitor is turned on/off.

- Do not turn power on/off more than once every 3 minutes.
  Doing so may damage the Inverter.

■Inverter Output Terminals (U/T1, V/T2, W/T3)

- For connection of the output terminal, use the applicable cable or a cable with a larger diameter. Otherwise, the output voltage between the Inverter and the motor may drop.
  Particularly during low-frequency output, a voltage drop occurs with the cable, resulting in motor torque reduction.
- Do not mount a phase advance capacitor or surge absorber. These devices cause the Inverter to trip, or may cause damage to the capacitor or surge absorber.
- If the cable length exceeds 20 m (particularly, with 400-V class), a surge voltage may be generated at the motor terminal due to stray capacitance or inductance of the cable, causing the motor to burn out.
- To connect several motors, provide a thermal relay for each.
- The RC value of each thermal relay should be 1.1 times of the motor rated current. The relay may trip easily depending on the cable length. In this case, connect an AC reactor to the Inverter output.

■DC Reactor Connection Terminal (+1, P/+2)

- This terminal is used to connect the optional DC reactor for power factor improvement.
  By factory default, a short-circuit bar has been connected between the terminals +1 and P/+2.
  Before connecting the DC reactor, remove this short-circuit bar.
- The length of the DC reactor connection cable should be 5 m or less.

  If the DC reactor is not used, do not remove the short-circuit bar.
  If you remove the short-circuit bar without connecting the DC reactor, no power is supplied to the Inverter main circuit, disabling operation.

■External Braking Resistor Connection Terminal (P/+2, RB)/Regenerative Braking Unit Connection Terminal (P/+2, N/-)

- The Inverters with 22 kW or lower capacity incorporate a regenerative braking circuit.
  To improve braking capability, mount the optional external braking resistor to this terminal.
  Do not mount a resistor whose resistance is lower than the specified value. Doing so may damage the regenerative braking circuit.
- The Inverters with 30 kW or higher capacity do not incorporate a regenerative braking circuit.
  To improve braking capability, the optional regenerative braking unit and braking resistor are required. In this case, connect the regenerative braking unit terminals (P/+2, N/-) to the Inverter terminals (P/+2, N/-).
- The cable length should be 5 m or less. Twist the two wires.
- Do not connect any device other than the optional regenerative braking unit or external braking resistor to this terminal.

■Ground Terminal (G ⏚)

- To prevent electric shock, be sure to ground the Inverter and the motor.
- According to the Electric Apparatus Engineering Regulations, the 200-V class Inverter should be connected to the grounding electrodes under type-D grounding conditions (conventional type 3 grounding: ground resistance 100 Ω or less), the 400-V class Inverter should be connected to the grounding electrodes under type-C grounding conditions (conventional special type 3 grounding: ground resistance 10 Ω or less).
- For the ground cable, use the applicable cable or a cable with a larger diameter. Make the cable length as short as possible.
- When several Inverters are connected, the ground cable must not be connected across several Inverters, and must not be looped.
  Otherwise, the Inverters may malfunction.

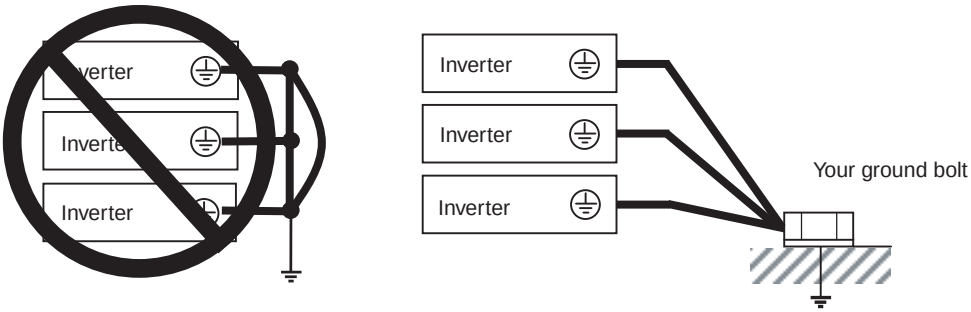

■Installing Screws in the Main Circuit Terminal Block

- For the main circuit terminal blocks of 3G3RX-A2055/-A2075/-A4055/-A4075, be sure to install the terminal block screw washers with their grooved sides aligned vertically, as shown below. Not doing so may result in a contact failure or fire.
  (Intended terminals: R/L1, S/L2, T/L3, +1, P/+2, N/-, U/T1, V/T2, W/T3, RB)

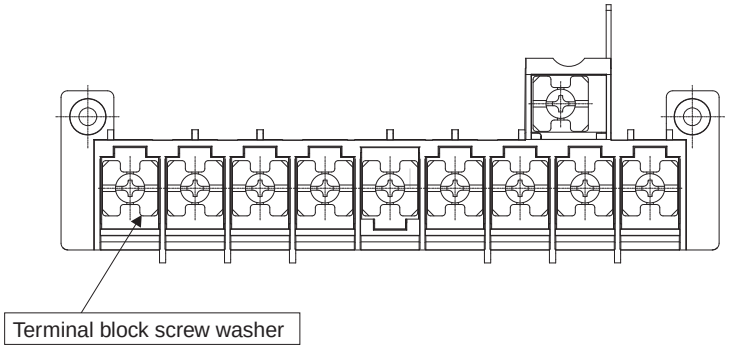

■ Arrangement of Main Circuit Terminals

The terminal arrangement on the Inverter main circuit terminal block is shown below.

Terminal arrangement	Applicable model
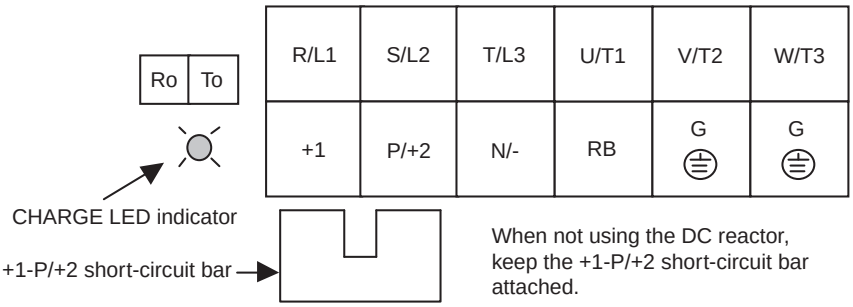 When not using the DC reactor, keep the +1-P/+2 short-circuit bar attached. [EMC filter function switching method] 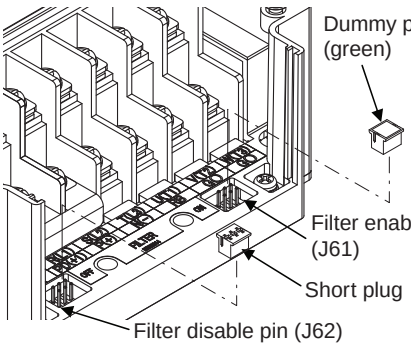 In order to enable the EMC filter function, set up the plug inserted into the filter enable pin (J61) and filter disable pin (J62) as shown in the table below. Confirm that electrical power has been disconnected before performing this setup. Not doing so may result in electric shock. Also, use with the plug inserted. **Filter enable pin (J61) / Filter disable pin (J62)** EMC filter disabled (factory default): Dummy plug (green) / Short plug EMC filter enabled: Short plug / Dummy plug (green)	3G3RX-A2004 to A2037 3G3RX-A4004 to A4037 Ro,To: M4 Ground terminal: M4 Others: M4
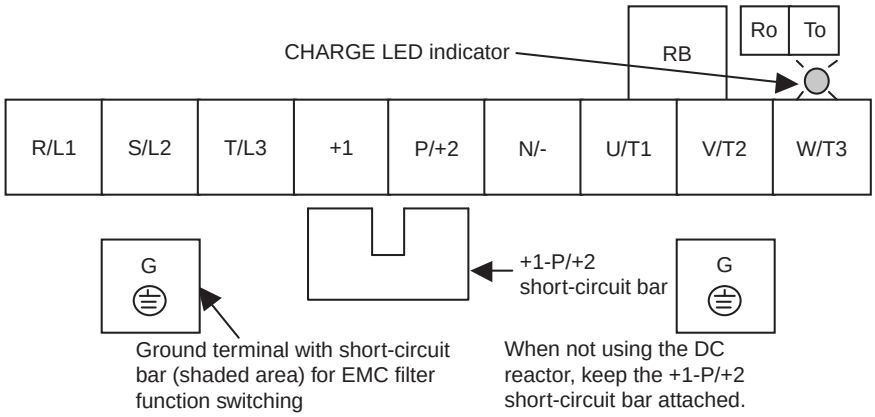 When not using the DC reactor, keep the +1-P/+2 short-circuit bar attached.	3G3RX-A2055, A2075 3G3RX-A4055, A4075 Ro,To: M4 Ground terminal: M5 Others: M5
[EMC filter function switching method] 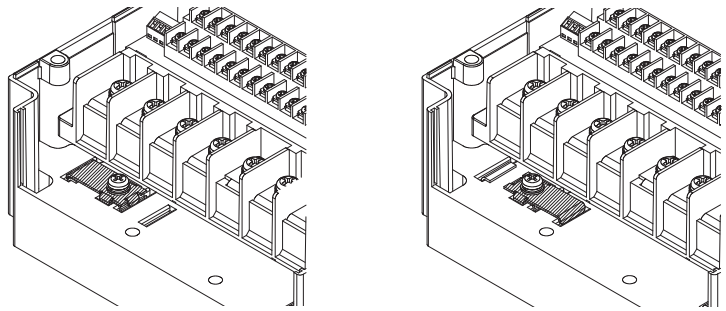	3G3RX-A2110 3G3RX-A4110 Ro,To: M4 Ground terminal: M6 Others: M5

Terminal arrangement	Applicable model
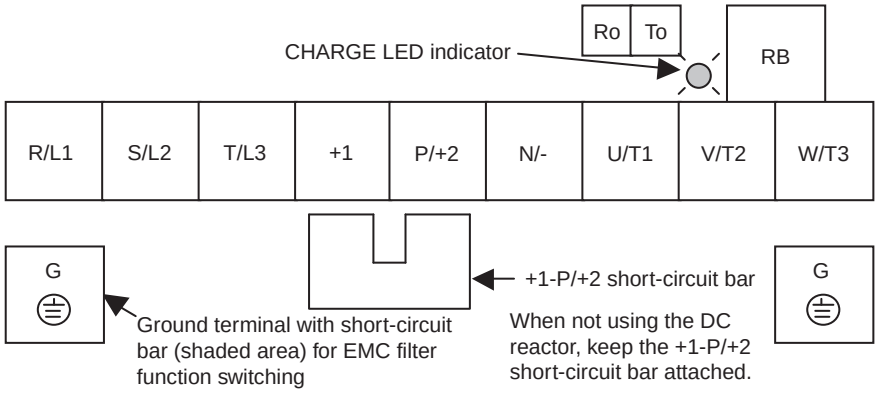	3G3RX-A2150 to A2185 3G3RX-A4150 to A4220 Ro,To: M4 Ground terminal: M6 Others: M6
[EMC filter function switching method] 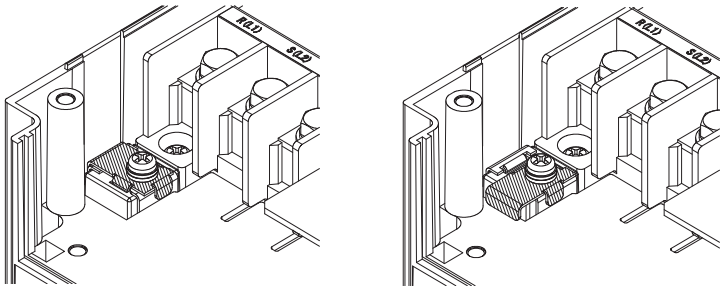 EMC filter enabled EMC filter disabled (factory default)	3G3RX-A2220 Ro,To: M4 Ground terminal: M6 Others: M8
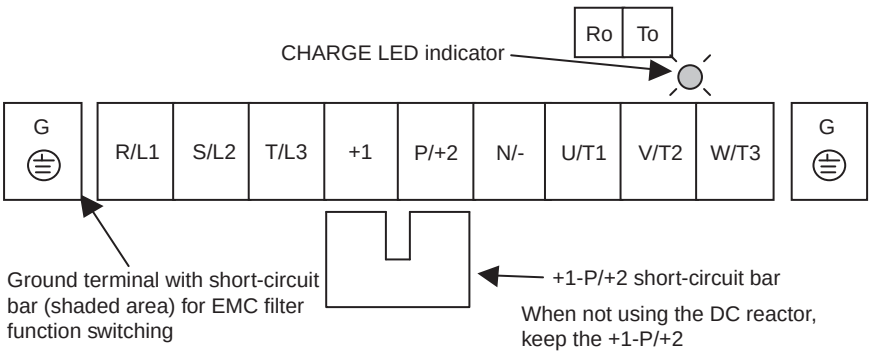	3G3RX-A2300 Ro, To: M4 Ground terminal: M6 Others: M8
	3G3RX-A4300 Ro,To: M4 Ground terminal: M6 Others: M6
[EMC filter function switching method] 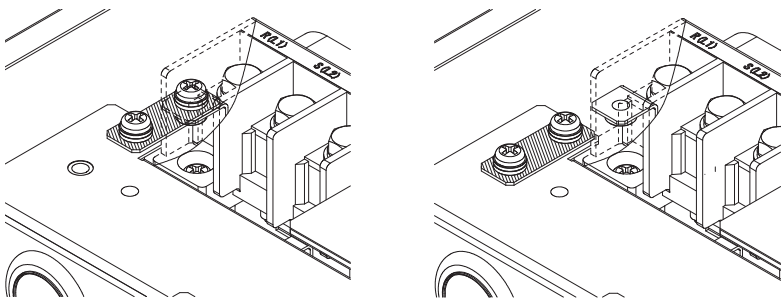 EMC filter enabled EMC filter disabled (factory default)	3G3RX-A2370 3G3RX-A4370 Ro,To: M4 Ground terminal: M8 Others: M8

Terminal arrangement	Applicable model
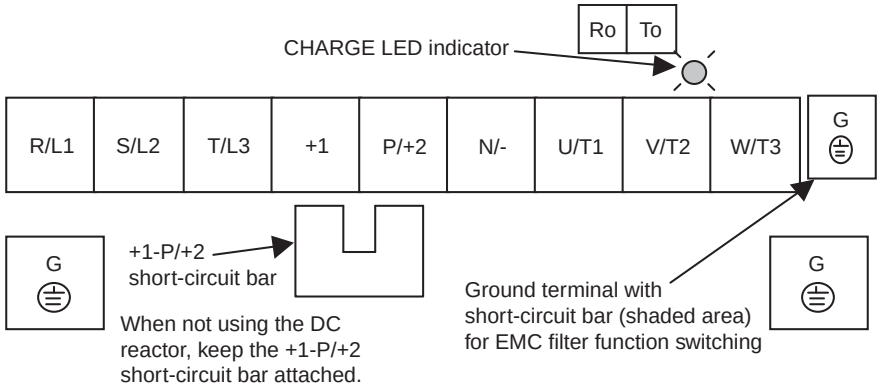 [EMC filter function switching method] 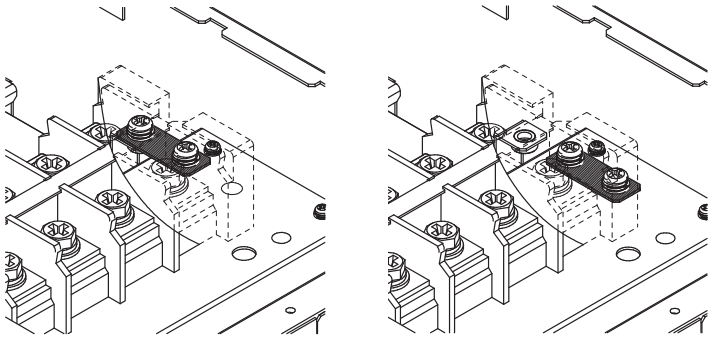	3G3RX-A2450 3G3RX-A4450 3G3RX-A4550 Ro,To: M4 Ground terminal: M8 Others: M8
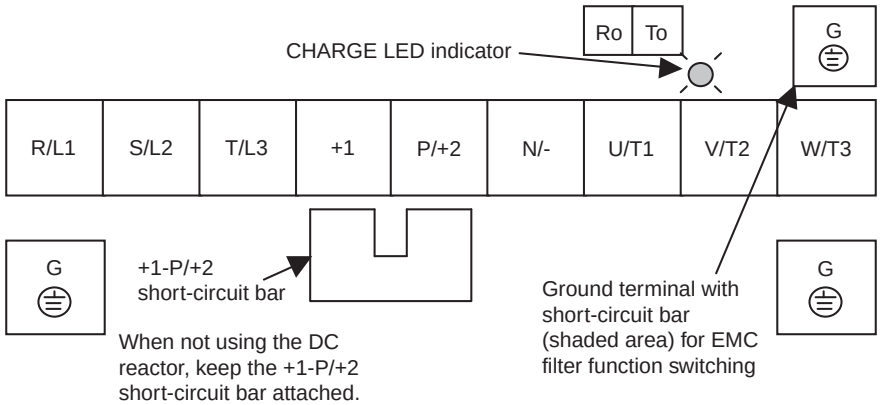 [EMC filter function switching method] 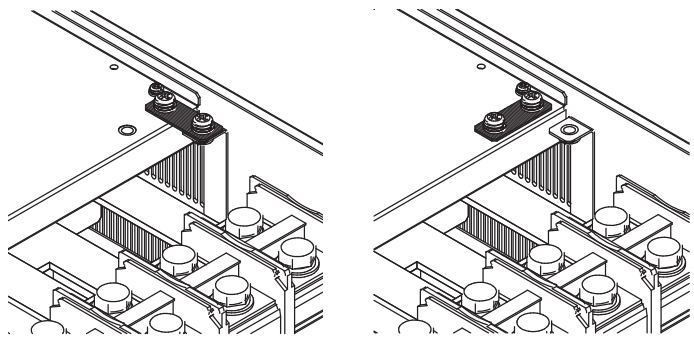	3G3RX-A2550 Ro,To: M4 Ground terminal: M8 Others: M10

Terminal arrangement	Applicable model
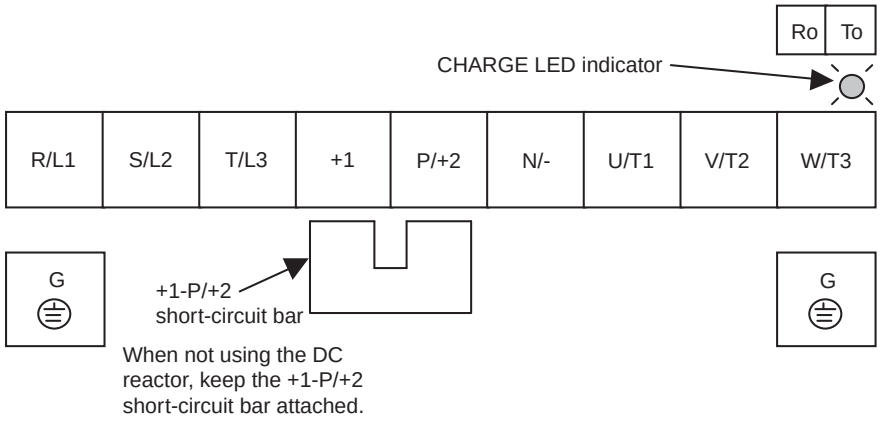 When not using the DC reactor, keep the +1-P/+2 short-circuit bar attached.	3G3RX-A4750 3G3RX-A4900 3G3RX-A411K 3G3RX-A413K Ro,To: M4 Ground terminal: M8 Others: M10

■Recommended Cable Size, Wiring Device and Crimp Terminal

For Inverter wiring, crimp terminal and terminal screw tightening torque, refer to the table below.

	Motor output (kW)	Applicable Inverter model	Power cable (mm^2) R, S, T, U, V, W, +1, P/+2, N/-	Ground cable (mm^2)	External braking resistor between +1 and RB (mm^2)	Terminal screw size	Crimp terminal	Tightening torque N•m	Applicable device: Earth leakage breaker (ELB)
200-V class	0.4	3G3RX-A2004	1.25	1.25	1.25	M4	1.25-4	1.2 (max.1.8)	5 A
	0.75	3G3RX-A2007	1.25	1.25	1.25	M4	1.25-4	1.2 (max.1.8)	10 A
	1.5	3G3RX-A2015	2	2	2	M4	2-4	1.2 (max.1.8)	15 A
	2.2	3G3RX-A2022	2	2	2	M4	2-4	1.2 (max.1.8)	20 A
	3.7	3G3RX-A2037	3.5	3.5	3.5	M4	3.5-4	1.2 (max.1.8)	30 A
	5.5	3G3RX-A2055	5.5	5.5	5.5	M5	R5.5-5	2.4 (4.0 max.)	50 A
	7.5	3G3RX-A2075	8	8	8	M5	R8-5	2.4 (4.0 max.)	60 A
	11	3G3RX-A2110	14	14	14	M6	R14-6	4.0 (4.4 max.)	75 A
	15	3G3RX-A2150	22	22	22	M6	22-6	4.5 (4.9 max.)	100 A
	18.5	3G3RX-A2185	30	22	30	M6	38-6	4.5 (4.9 max.)	100 A
	22	3G3RX-A2220	38	30	38	M8	38-8	8.1 (8.8 max.)	150 A
	30	3G3RX-A2300	60 (22 × 2)	30	—	M8	60-8	8.1 (8.8 max.)	200 A
	37	3G3RX-A2370	100 (38 × 2)	38	—	M8 *1	100-8	8.1 (20.0 max.)	225 A
	45	3G3RX-A2450	100 (38 × 2)	38	—	M8 *1	100-8	8.1 (20.0 max.)	225 A
	55	3G3RX-A2550	150 (60 × 2)	60	—	M10	150-10	20.0 (22.0 max.)	350 A

	Motor output (kW)	Applicable Inverter model	Power cable (mm^2) R, S, T, U, V, W, +1, P/+2, N/-	Ground cable (mm^2)	External braking resistor between +1 and RB (mm^2)	Terminal screw size	Crimp terminal	Tightening torque N•m	Applicable device: Earth leakage breaker (ELB)
400-V class	0.4	3G3RX-A4004	1.25	1.25	1.25	M4	1.25-4	1.2 (max.1.8)	5 A
	0.75	3G3RX-A4007	1.25	1.25	1.25	M4	1.25-4	1.2 (max.1.8)	5 A
	1.5	3G3RX-A4015	2	2	2	M4	2-4	1.2 (max.1.8)	10 A
	2.2	3G3RX-A4022	2	2	2	M4	2-4	1.2 (max.1.8)	10 A
	3.7	3G3RX-A4037	2	2	2	M4	2-4	1.2 (max.1.8)	15 A
	5.5	3G3RX-A4055	3.5	3.5	3.5	M5	R2-5	2.4 (max. 4.0)	30 A
	7.5	3G3RX-A4075	3.5	3.5	3.5	M5	3.5-5	2.4 (max. 4.0)	30 A
	11	3G3RX-A4110	5.5	5.5	5.5	M6	R5.5-6	4.5 (max. 4.4)	50 A
	15	3G3RX-A4150	8	8	8	M6	8-6	4.5 (max. 4.9)	60 A
	18.5	3G3RX-A4185	14	14	14	M6	14-6	4.5 (max. 4.9)	60 A
	22	3G3RX-A4220	14	14	14	M6	14-6	4.5 (max. 4.9)	75 A
	30	3G3RX-A4300	22	22	-	M6	22-6	4.5 (max. 4.9)	100 A
	37	3G3RX-A4370	38	22	—	M8 *1	38-8	8.1 (max. 20.0)	100 A
	45	3G3RX-A4450	38	22	—	M8 *1	38-8	8.1 (max. 20.0)	150 A
	55	3G3RX-A4550	60	30	—	M8 *1	R60-8	8.1 (max. 20.0)	175 A
	75	3G3RX-A4750	100 (38 × 2)	38	—	M10 *1	100-10	20.0 (max. 22.0)	225 A
	90	3G3RX-A4900	100 (38 × 2)	38	—	M10 *1	100-10	20.0 (max. 22.0)	225 A
	110	3G3RX-A411K	150 (60 × 2)	60	—	M10 *1	150-10	20.0 (max. 35.0)	350 A
	132	3G3RX-A413K	80 × 2	80	—	M10 *1	80-10	20.0 (max. 35.0)	350 A

*1. When the cable is connected without using the crimp terminal (bare wires), use the square washer included with the product.

Note: The cable size is based on the HIV cable (75°C heat resistance).

■ Connection for Separating Inverter Control Circuit Power Supply from Main Power Supply

If the Inverter protection circuit is activated to turn off the magnetic contactor of the Inverter input power supply, the power to the Inverter control circuit is also turned off, and the alarm signal cannot be kept on.
If the alarm signal must be kept on, use control circuit power supply terminals Ro and To.
Connect control circuit power supply terminals Ro and To to the primary circuit of the magnetic contactor according to the following procedure.

(Connection method)
Incoming electricity specifications
200-V class:
200 to 240 V (+10%, -15%)
50, 60 Hz ±5%
(282 to 339 V DC)
400-V class:
380 to 480 V (+10%, -15%)
50, 60 Hz ±5%
(537 to 678 V DC)

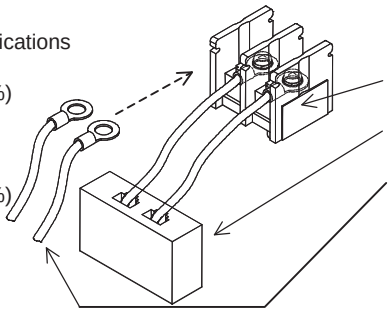

(1) Disconnect the connected wire.
(2) Disconnect the J51 connector.
(3) Connect the control circuit power cable to the control circuit power supply terminal block.

* To separate the control circuit power supply (Ro, To) from the main circuit power supply (R, S, T), observe the following instructions:
  - For wiring between terminals Ro and To (terminal screw size: M4), use a cable of 1.25 mm^2 or more.
  - Connect a 3 A fuse to the control circuit power supply cable.
  - If the control circuit power supply (Ro, To) is turned on before the main circuit power supply (R, S, T), ground fault detection at power-on is disabled.
  - To use a DC power supply for the control circuit power supply (Ro, To), set the multi-function output terminal contact selection (C031 to C036) for the multi-function output terminals (P1 to P5) and relay output terminals (MA, MB, MC) to "00". If the multi-function output terminal contact selection is set to "01", the output signal may chatter when the DC power supply is turned off.
  - Tightening torque for terminals Ro and To
    M4: 1.2 N•m (1.4 max.)

Wiring Control Circuit Terminals

- Terminals FC and SC are insulated from each other via the input and output signal common terminals.
  Do not short-circuit or ground these common terminals.
  Do not ground these common terminals via external equipment. (Check the external equipment ground conditions.)
- For wiring the control circuit terminals, use twisted shielded cables (recommended size: 0.75 mm^2), and connect the shielded cable to each common terminal.
- The control circuit terminal connection cables should be 20 m or less.
- Separate the control circuit terminal connection cable from the main circuit cable (power cable) and the relay control circuit cable.
- For the connection of the TH (thermistor input) terminal, twist cables with the terminal SC individually, and separate them from other SC common cables.
  Since a weak current flows through the thermistor, the thermistor connection cable must be separated from the main circuit cable (power cable). The thermistor connection cable should be 20 m or less.

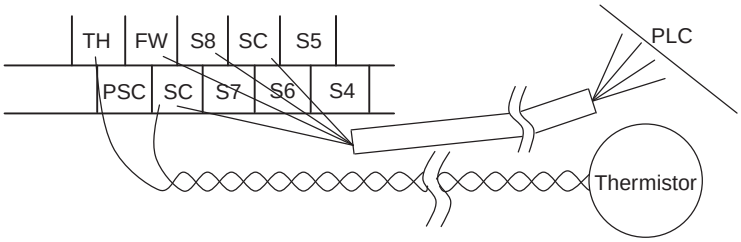

- To use a relay for the multi-function output terminal, connect a surge-absorbing diode in parallel with the coil.
- Do not short-circuit the analog power supply terminals (between FS and FC) and/or the interface power supply terminals (between P24 and SC).
  Doing so may result in failure of the Inverter.

■Arrangement of the Control Circuit Terminal Block

	FS	FE	AM	MP	TH	FW	S8	SC	S5	S3	S1	P4	P3	P1	MA
FC	FV	FI	AMI	P24	PSC	SC	S7	S6	S4	S2	P5	PC	P2	MC	MB

Terminal screw size M3 Tightening torque 0.7 N·m (0.8 max.)

■ Selecting the Input Control Logic

By factory default the terminal FW and the multi-function input terminal are set to sink logic (NPN). To change the input control logic to source logic (PNP), remove the short-circuit bar between the terminals P24 and PSC on the control circuit terminal block, and connect it between the terminals PSC and SC.

■ Selecting the Sequence Input Method (Sink/Source Logic)

	When the Inverter's internal interface power supply is used	When external power supply is used (Remove the short-circuit bar from the control terminal block.)
Sink logic	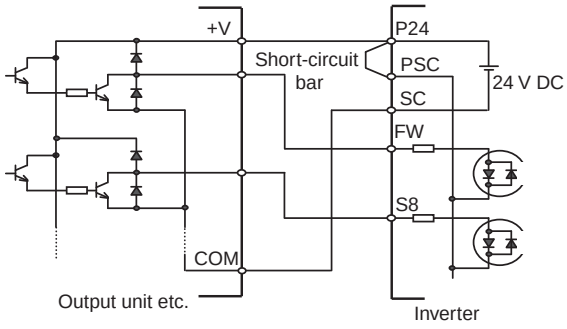	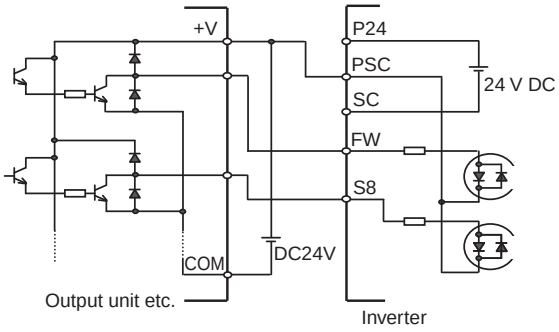
Source logic	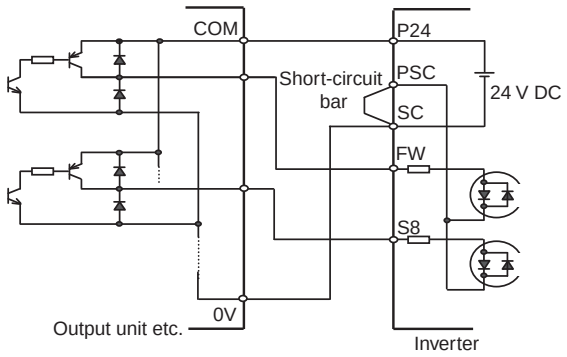	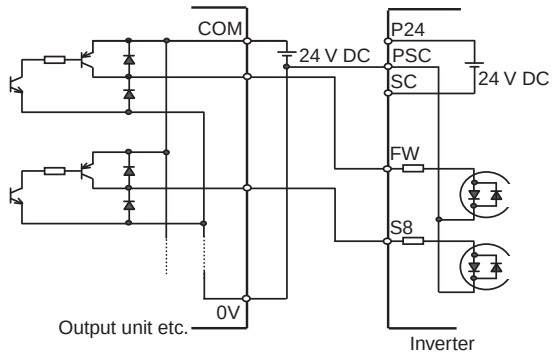

■ Selecting the Sequence Output Method (Sink/Source Logic)

Sink logic	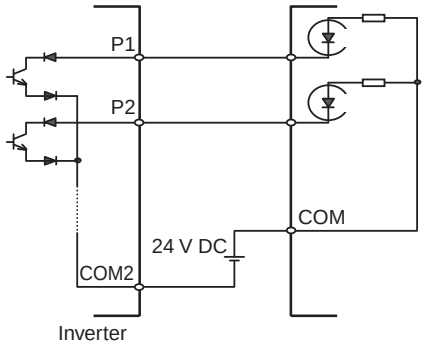	Source logic	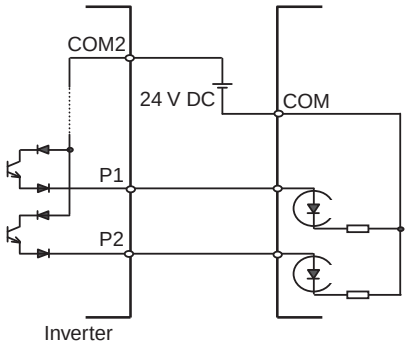

Wiring the Digital Operator

- The 3G3RX Series Inverter can be operated with the optional 3G3AX-OP01 as well as the standard Digital Operator.
- To use the Digital Operator apart from the Inverter body, place an order for the optional cable 3G3AX-OPCN1 (1 m), or 3G3AX-OPCN3 (3 m).
- The optional cable should be 3 m or less. Using a cable longer than 3 m may cause malfunction.

Conforming to EC Directives

■Conforming Standards

- EMC directive EN 61800-3
- Low-voltage directive EN 61800-5-1

■Concept of Conformity

EMC Directive

OMRON products are the electrical devices incorporated and used in various machines or manufacturing equipment. For this reason, we make efforts to conform our products to their related EMC standards so that the machines or equipment which have incorporated our products should easily conform to the EMC standards. The 3G3RX models have conformed to the EMC directive EN 61800-3 by following the installation and wiring method as shown below. Your machines or equipment, however, vary in type, and in addition, EMC performance depends on the configuration, wiring, or location of the devices or control panels which incorporate the EC directive conforming products. This in turn does not allow us to confirm the condition and the conformity in which our products are used. Therefore, we appreciate confirmation of the final EMC conformity for the whole machine or equipment on your own.

Wiring the Power Supply

- Keep the ground cable as short as possible.
- Keep the cable between the Inverter and the noise filter as short as possible.

Connecting a Motor to the Inverter

- When connecting a motor to the Inverter, be sure to use shield braided cables.
- Keep the cables as short as possible.

Low-voltage Directive

The 3G3RX models have conformed to the EMC directive EN61800-5-1 by performing the machine installation and wiring as shown below.

- The 3G3RX models are an open type device. Be sure to install it inside the control panel.
- The power supply and voltage (SELV) with reinforced or double insulation should be used for wiring to the control circuit terminals.
- To satisfy requirements of the LVD (low-voltage) directive, the Inverter must be protected with a molded case circuit breaker (MCCB) in case a short-circuiting accident occurs. Be sure to install a molded case circuit breaker (MCCB) on the power supply side of the Inverter.
- Use one molded case circuit breaker (MCCB) per Inverter.
- Use the crimp-type terminal with an insulation sleeve to connect to the main circuit terminals.

Chapter 3

Operation

3-1 Operation Method 3-3
3-2 Test Run Procedure 3-5
3-3 Test Run Operation 3-6
3-4 Part Names and Descriptions of the Digital Operator 3-9
3-5 Keys 3-12
3-6 Parameter Transition 3-13
3-7 Parameter List 3-19

WARNING	
	Do not change wiring and slide switches (SW1), put on or take off Digital Operator and optional devices, replace cooling fans while the input power is being supplied. Doing so may result in a serious injury due to an electric shock.
	Do not remove the terminal block cover during the power supply and 10 minutes after the power shutoff. Doing so may result in a serious injury due to an electric shock.
	Do not operate the Digital Operator or switches with wet hands. Doing so may result in a serious injury due to an electric shock.
	Inspection of the Inverter must be conducted after the power supply has been turned off. Not doing so may result in a serious injury due to an electric shock. The main power supply is not necessarily shut off even if the emergency shutoff function is activated.

CAUTION	
	Do not touch the Inverter fins, braking resistors and the motor, which become too hot during the power supply and for some time after the power shutoff. Doing so may result in a burn.
	Take safety precautions such as setting up a molded-case circuit breaker (MCCB) that matches the Inverter capacity on the power supply side. Not doing so might result in damage to property due to the short circuit of the load.

Safety Information

■Operation and Adjustment

- Be sure to confirm the permissible range of motors and machines before operation because the Inverter speed can be changed easily from low to high.
- Provide a separate holding brake if necessary.

Precautions for Use

■Error Retry Function

- Do not come close to the machine when using the error retry function because the machine may abruptly start when stopped by an alarm.
- Be sure to confirm the RUN signal is turned off before resetting the alarm because the machine may abruptly start.

■Non-Stop Function at Momentary Power Interruption

- Do not come close to the machine when selecting restart in the non-stop function at momentary power interruption selection (b050) because the machine may abruptly start after the power is turned on.

■Operation Stop Command

- Provide a separate emergency stop switch because the STOP key on the Digital Operator is valid only when function settings are performed.
- When checking a signal during the power supply and the voltage is erroneously applied to the control input terminals, the motor may start abruptly. Be sure to confirm safety before checking a signal.

3-1 Operation Method

This Inverter has the following operation methods that are selected by the RUN command/ frequency reference settings.
The features and the requirements for each operation method are also given below:

■ To enter the RUN command/frequency reference via the Digital Operator

Operates the Inverter via the key sequence of the standard or optional Digital Operator.
When operating the Inverter only via the Digital Operator, the Inverter does not need to be connected to the control circuit terminal block.

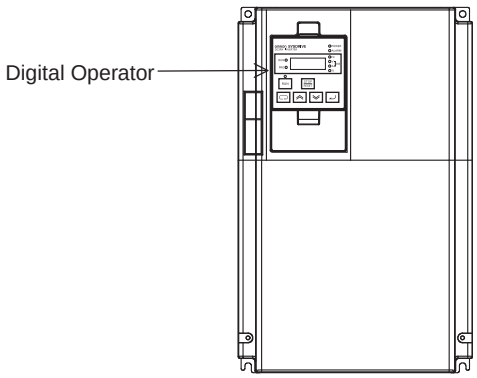

■To enter the RUN command/frequency reference from the control circuit terminal block

Operates the Inverter by connecting the external signals (from the frequency setting device, starting switch, etc.) to the control circuit terminal block.
The operation starts by turning ON the RUN command (FW, RV) while the input power supply is turned ON.
Note that the frequency can be set using the voltage directive or the current directive from the control circuit terminal block, which can be selected according to the system. For details, refer to "Control Circuit Terminal" (page 2-7).

(Requirements for operation)
• RUN command: Switch, Relay etc.
• Frequency reference: External signal (e.g. 0 to 10 V DC, -10 to 10 V DC, 4 to 20 mA)

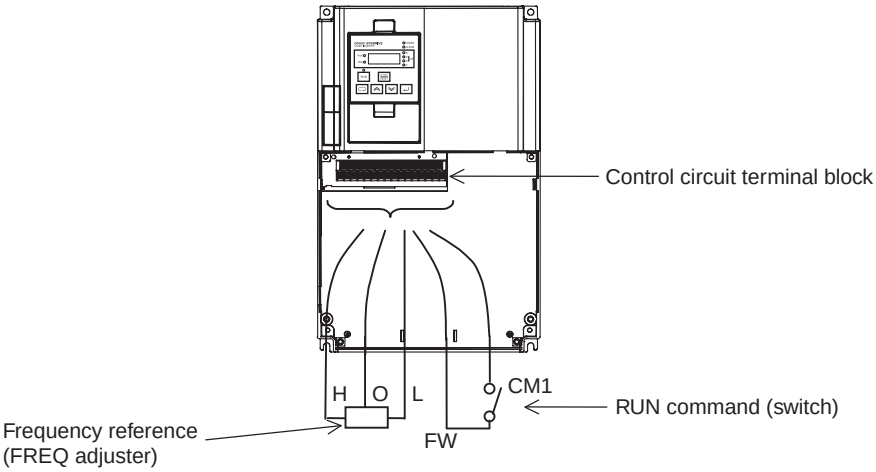

■To enter the RUN command/frequency reference in a combination of directives from the Digital Operator and the control circuit terminal block

The RUN command/frequency reference sources can be selected individually from the Digital Operator as well as the control circuit terminal block.

3-2 Test Run Procedure

Item	Description	Reference page
Installation and Mounting	Install the Inverter according to the installation conditions.	2-1
	• Make sure that the installation conditions are met.	
Wiring and Connection	Connect to the power supply and peripheral devices.	2-6
	• Select peripheral devices that meet the specifications, and wire correctly.	
Power On	Check the following before turning on the power.	
	• Make sure that an appropriate power supply voltage is supplied and that the power input terminals (R/L1, S/L2, and T/L3) are wired correctly. • 3G3RX-A2□: 3-phase 200 to 240 V AC • 3G3RX-A4□: 3-phase 380 to 480 V AC • Make sure that the motor output terminals (U/T1, V/T2, and W/T3) are connected to the motor correctly. • Make sure that the control circuit terminals and the control device are wired correctly and that all control terminals are turned off. • Set the motor to no-load status (i.e., not connected to the mechanical system). • After checking the above, turn on the power.	
Display Status Check	Make sure that there are no faults in the Inverter.	
	• When the power is turned on normally, the display shows: • RUN LED indicator : ON ALARM LED indicator : OFF • POWER LED indicator : ON RUN command LED indicator : ON • Data LED indicator (frequency) : ON • Data display : Displays the set value in d001. • If an error occurs, the error code is displayed on the data display. In this case, refer to "Chapter 5 Maintenance Operations" and make the necessary changes to remedy.	
Parameter Initialization	Initialize the parameters.	
	• Set parameter No. b084 to "02", and press the STOP RESET key while holding down the ⊂⊃ and ⌄ keys simultaneously.	
Parameter Settings	Set the parameters required for a test run.	
	• Set the motor capacity selection (H003) and the motor pole number selection (H004).	
No-load Operation	Start the no-load motor via the Digital Operator.	
	• Display parameter No. F001, set the output frequency using the ⌃ key and the ⌄ key, and press the ↵ key. Then, press the RUN key to rotate the motor.	
Actual Load Operation	Connect the mechanical system and operate via the Digital Operator.	
	• If there are no difficulties with the no-load operation, connect the mechanical system to the motor and operate via the Digital Operator.	
Operation	Refer to "Chapter 4 Functions", and set the necessary parameters.	

3-3 Test Run Operation

Power On

■Checkpoints Before Turning On the Power

- Make sure that an appropriate power supply voltage is supplied and that the power input terminals (R/L1, S/L2, and T/L3) are wired correctly.
  3G3RX- A2□: 3-phase 200 to 240 V AC
  3G3RX- A4□: 3-phase 380 to 480 V AC
- Make sure that the motor output terminals (U/T1, V/T2, and W/T3) are connected to the motor correctly.
- Make sure that the control circuit terminals and the control device are wired correctly and that all control terminals are turned off.
- Set the motor to no-load status (i.e., not connected to the mechanical system).

■Power On

- After checking the above, turn on the power.

Display Status Check

- When the power is turned on normally, the display shows:

[Normal]	RUN LED indicator (during RUN)	: ON	ALARM LED indicator	: OFF
	POWER LED indicator	: ON	RUN command LED indicator	: ON
	Data LED indicator (frequency)	: ON		
	Data display	: Displays the set value in d001		

- If an error occurs, refer to "Chapter 5 Maintenance Operations" and make the necessary changes to remedy.

[Fault]	RUN LED indicator (during RUN)	: ON	ALARM LED indicator	: ON
	POWER LED indicator	: ON	RUN command LED indicator	: ON
	Data LED indicator (frequency)	: ON		
	Data display	: An error code, such as "E-01", is displayed. (The display varies depending on the type of error.)		

Parameter Initialization

- Initialize the parameters using the following procedure.
- To initialize the parameters, set parameter b084 to "02".

Key sequence	Display example	Description
	0.0	Power On
Mode, Decrement	b---	Press the Mode key once, and then press the Decrement key three times to display "b---".
Mode	b001	Press the Mode key. "b001" is displayed.
Increment, Decrement	b084	Use the Increment or Decrement key to display "b084".
Mode	00	Press the Mode key. The set value in "b084" is displayed.
Increment, Decrement	02	Use the Increment or Decrement key to display "02".
Enter	b084	Press the Enter key. The set value is entered and "b084" is displayed.
STOP/RESET, Mode, Decrement		Press the STOP/RESET key while holding down the Mode and Decrement keys simultaneously. When the display blinks, release the STOP/RESET key first, and then the Mode and Decrement keys.
	-.00	Displays initialization.
(In 1 s)	d001	The parameter number is displayed again in approximately 1 s.

No-load Operation

•Start the no-load motor (i.e., not connected to the mechanical system) using the Digital Operator.

■Forward/Reverse Rotation via the Digital Operator

Key sequence	Display example	Description
		Press and hold the Mode key for 3 seconds or more to display "d001", and then press again. (Monitors the frequency reference.)
RUN		Press the RUN key. The RUN command LED indicator is lit and the monitor value of the frequency reference is displayed. (Factory default: F001 = 6)

•Make sure that no errors have occurred in the Inverter during operation.
•Switch between forward and reverse with the operator rotation direction selection (F004).

■Stopping the Motor

•After completing the no-load operation, press the STOP/RESET key. The motor will stop.

Actual Load Operation

•After checking the operation with the motor in the no-load status, connect the mechanical system and operate with an actual load.

■Connecting the Mechanical System

•After confirming that the motor has stopped completely, connect the mechanical system.
•Be sure to tighten all the screws when fixing the motor axis and the mechanical system.

■Operation via the Digital Operator

•Because a possible error may occur during operation, make sure that the STOP/RESET key on the Digital Operator is easily accessible.
•Use the Digital Operator to operate the Inverter the same way as in no-load operation.

■Checking the Operating Status

•After making sure that the operating direction is correct and that the Inverter is operating smoothly at a slow speed, increase the frequency reference.
•By changing the frequency reference or the rotation direction, make sure that there is no vibration or abnormal sound from the motor.
Make sure that the output current (output current monitor [d002]) is not excessive.

3-4 Part Names and Descriptions of the Digital Operator

Part Names and Descriptions

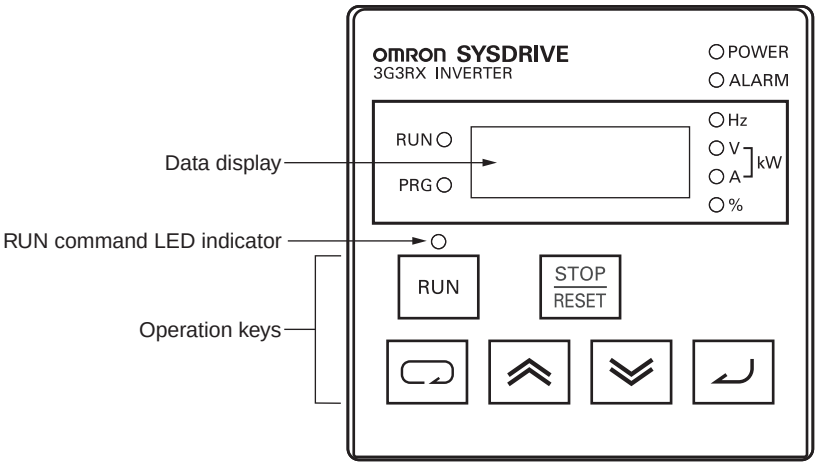

	Name	Function
POWER	POWER LED indicator	Lit when the power is supplied to the control circuit.
ALARM	ALARM LED indicator	Lit when an Inverter error occurs.
RUN	RUN (during RUN) LED indicator	Lit when the Inverter is running.
PRG	PROGRAM LED indicator	Lit when the set value of each function is indicated on the data display. Blinks during warning (when the set value is incorrect).
8.8.8.8.	Data display	Displays relevant data, such as frequency reference, output current, and set values.
Hz V A kW %	Data LED indicator	Lit according to the indication on the data display. Hz: Frequency V: Voltage A: Current kW: Power %: Ratio
○	RUN command LED indicator	Lit when the RUN command is set to the Digital Operator. (The RUN key on the Digital Operator is available for operation)
RUN	RUN key	Activates the Inverter. Available only when operation via the Digital Operator is selected. (Check that the RUN command LED indicator is lit.)
STOP/RESET	STOP/RESET key	Decelerates and stops the Inverter. Functions as a reset key if an Inverter error occurs.
	Mode key	Switches between: the monitor mode (d□□□), the basic function mode (F□□□), and the extended function mode (A□□□, b□□□, C□□□, H□□□).
	Enter key	Enters the set value. (To change the set value, be sure to press the Enter key.)

	Name	Function
	Increment key	Changes the mode. Also, increases the set value of each function.
	Decrement key	Changes the mode. Also, decreases the set value of each function.

Display System and Key Sequence of Each Code

• This section explains the examples of typical operation (Basic display, Complete display) and the extended function mode U as a special operation.
This operation can be performed when other display modes are selected.

The display indicates the setting of "b038" when the power is turned on. For details, refer to "Initial Screen Selection (Initial Screen at Power-ON)" (page 4-56).
When "b038 = 01" (factory default), 0.00 for output frequency monitor "d001" is displayed.
Press the Mode key to display d001 .

Note: The Digital Operator display varies depending on the settings of display selection "b037", initial screen selection "b038", and user parameter automatic setting function selection "b039". For details, refer to "Display Selection" (page 4-53), "Initial Screen Selection (Initial Screen at Power-ON)" (page 4-56), "User Parameter Automatic Setting Function" (page 4-57).

Item	Function code	Data	Description
Display selection	b037	00	Complete display
		01	Individual display of functions
		02	User setting
		03	Data comparison display
		04	Basic display (factory default)
Initial screen selection (Power On)	b038 *	00	Screen when the Enter key was pressed last
		01	d001 (Output frequency monitor) (factory default)
		02	d002 (Output current monitor)
		03	d003 (Rotation direction monitor)
		04	d007 (Frequency conversion monitor)
		05	F001 (Output frequency setting/monitor)
User parameter automatic setting function selection	b039 *	00	Disabled (factory default)
		01	Enabled

*Not displayed by factory default.

* To return the display to d001 or 0.00 * from any display on the Digital Operator, refer to the following procedures.

• Hold down the Mode key for 3 seconds or more to display d001 and 0.00 * alternately. Press the Mode key to display d001 or 0.00 *.

* 0.00 shows the status during stop. Displays the output frequency of the Inverter during operation.

■ Operation Example for Basic Display (factory default: "b037 = 04")

• Displays the limited basic parameters.

Monitor mode : All

Basic function mode : 4 parameters

Extended function mode : 24 parameters

• Other parameters than those mentioned above are not displayed. To display all parameters, select "Complete display 'b037 = 00'".

<Parameters to be Displayed and Arrangement>

NO.	Display code	Item
1	d001 to d104	Monitor display
2	F001	Output frequency setting/monitor
3	F002	Acceleration time 1
4	F003	Deceleration time 1
5	F004	Operator rotation direction selection
6	A001	Frequency reference selection
7	A002	RUN command selection
8	A003	Base frequency
9	A004	Maximum frequency
10	A005	FV/FI selection
11	A020	Multi-step speed reference 0
12	A021	Multi-step speed reference 1
13	A022	Multi-step speed reference 2
14	A023	Multi-step speed reference 3
15	A044	V/f characteristics selection
16	A045	Output voltage gain
17	A085	RUN mode selection
18	b001	Retry selection
19	b002	Allowable momentary power interruption time
20	b008	Trip retry selection
21	b011	Trip retry wait time
22	b037	Display selection *
23	b083	Carrier frequency
24	b084	Initialization selection
25	b130	Overvoltage protection function during deceleration
26	b131	Overvoltage protection level during deceleration
27	C021	Multi-function output terminal P1 selection
28	C022	Multi-function output terminal P2 selection
29	C036	Relay output (MA, MB) contact selection

* If the intended parameter is not displayed, check the setting of display selection "b037". To display all parameters, set "00" to "b037".

3-5 Keys

	Name	Description
	Mode key	Switches between the command setting and the data setting, and between the function mode and the extended function mode. With this key, you can always change the display as follows: [Supplemental Information] To jump to "d001" from any function mode, hold down the Mode key for 3 seconds. 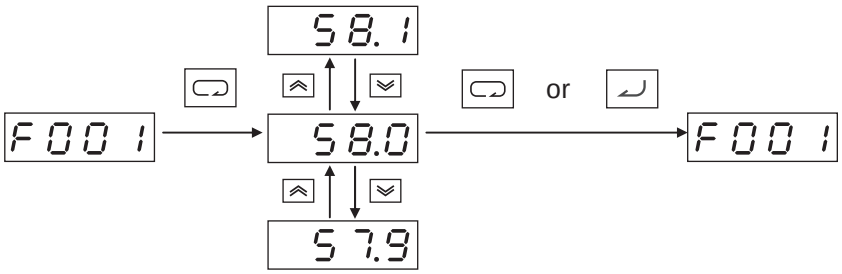 Note: Always press the Enter key to store any changed data.
	Increment key	Changes the set values, parameters, and commands.
	Decrement key	
	RUN key	Starts the operation. Forward/Reverse rotation depends on the "F004" setting.
	STOP/RESET key	Stops the operation. Functions as a reset key if an error occurs.
	Enter key	Enters and stores changed data. Do not press the Enter key if you don't want to store any changes, for example, if you change the data inadvertently.

3-6 Parameter Transition

Operation and sequence of code display | Operation and sequence of monitor/data display

Press the Increment/Decrement key to scroll through codes in the code display and to increase/decrease the number in the data display. Press either key until you see the desired code or data. For fast-forwarding, press and hold either key.

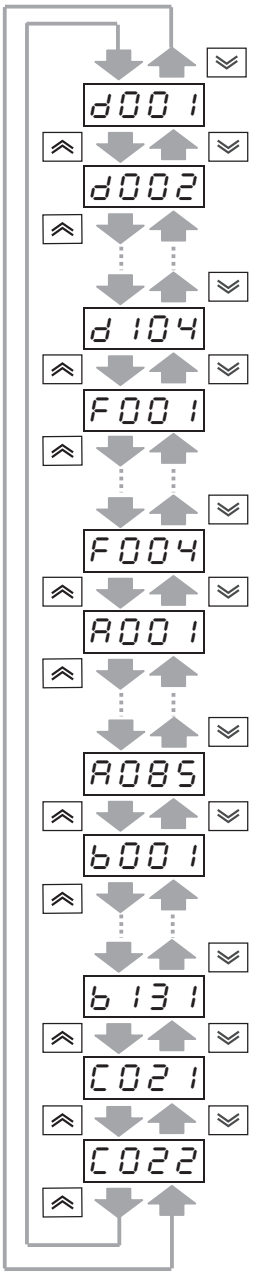

Monitor Mode

Press the Mode key in the code display to display its monitor value.

0.00 (Monitor display) *1

or

Press the Mode/Enter key in the monitor display to return to its code display.

Note: By factory default, 0.00 appears at power-on.

Press the Mode key in this status to display d001 .

Function/Extended Function Mode

Press the Mode key in the code display to display its data.

(Data display) *1 *2

To upper limit

30.01

30.00

29.99

To lower limit

or

Data setting

Press the Increment/Decrement key to increase/decrease the number.

(Set the desired number.)

Press the Enter key in the data display to fix the data and to return to the code display.
Press the Mode key in the data display to return to its code display without changing the data.

*1. The setting displayed varies depending on the parameter.
*2. To change the data, be sure to press the Enter key.

■ Operation Example for Complete Display (Default: "b037 = 00")

Displays all parameters.

Operation and sequence of code display (Monitor/Function modes)	Operation and sequence of monitor/data display (Monitor/Function modes)	Operation and sequence of code display (Extended function mode)	Operation and sequence of monitor/data display (Extended function mode)

Press the Increment/Decrement key to scroll through codes in the code display and to increase/decrease the number in the data display.
Press either key until you see the desired code or data. For fast-forwarding, press and hold either key.

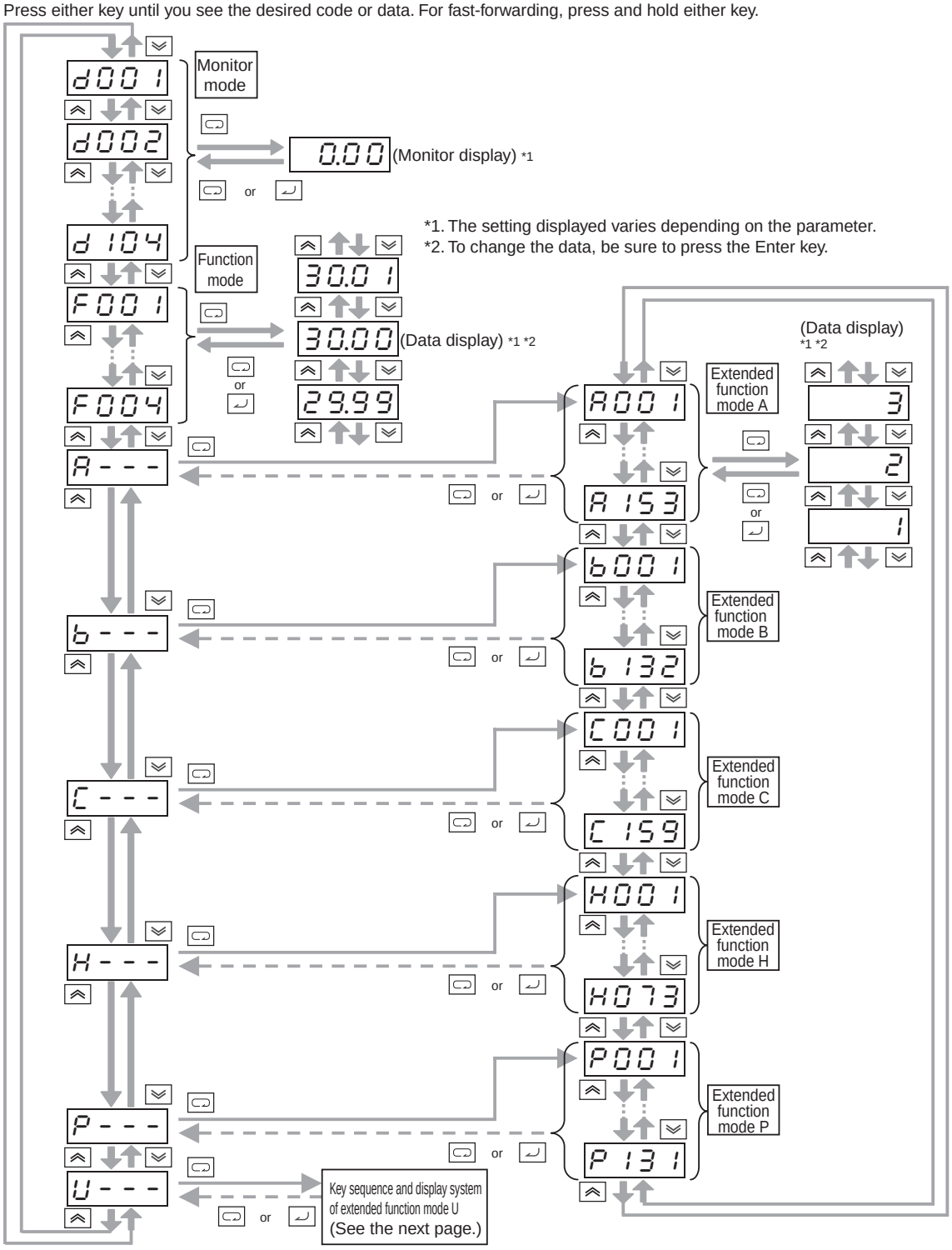

*1. The setting displayed varies depending on the parameter.
*2. To change the data, be sure to press the Enter key.

■ Display System and Key Sequence of Extended Function Mode U

The extended function mode U is the parameter to optionally register (or automatically record) other extended function codes, and differs in operation from other extended function modes.

Operation and sequence of code display (Monitor/Function modes)	Operation and sequence of code display (Extended function mode U)	Operation and sequence of code display Displaying another mode from extended function mode U	Operation and sequence of monitor/data display (Monitor/Function/Extended function modes)

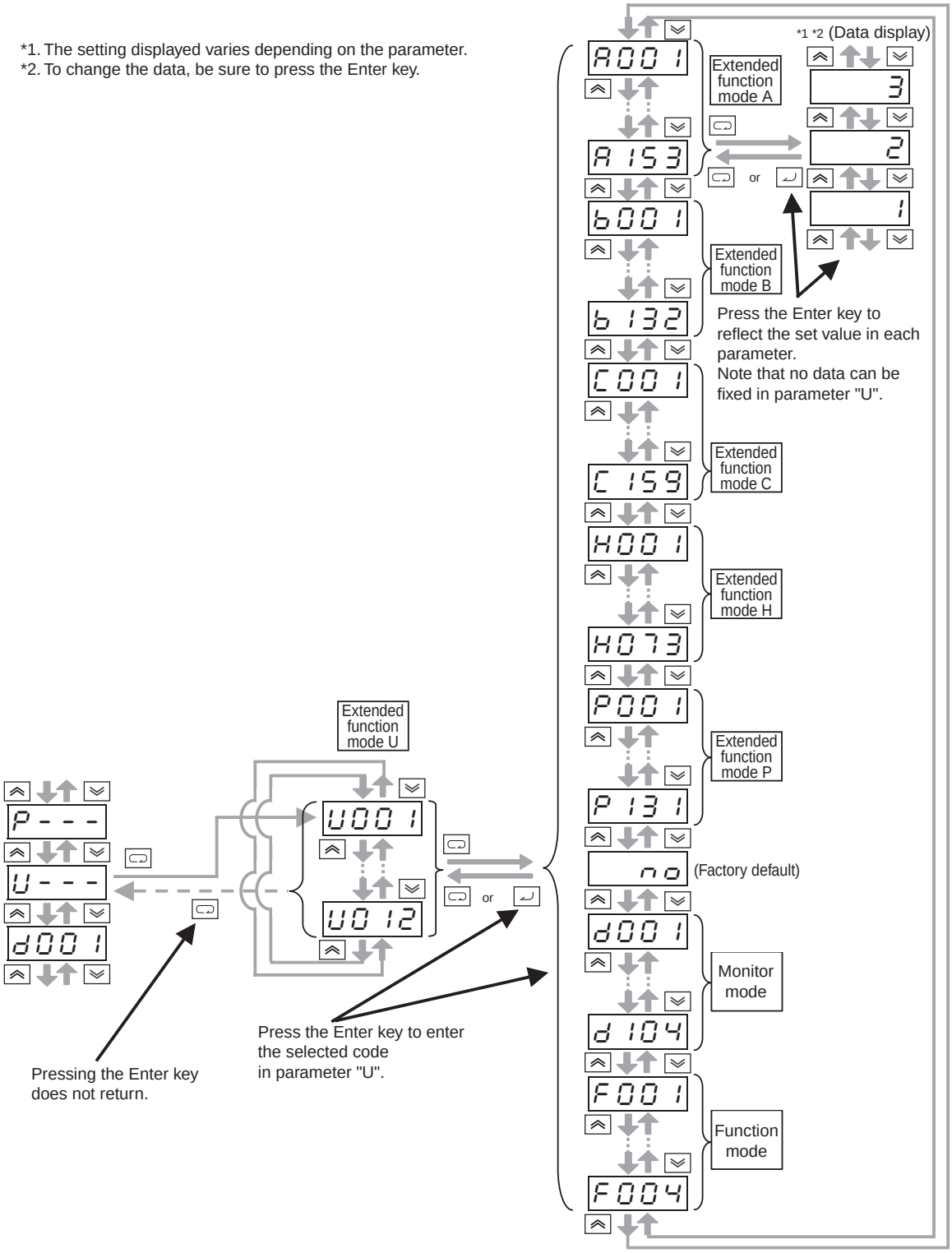

■ Direct Code Specification and Selection

- The codes can be specified or selected by directly entering each digit of the codes or data, as well as by scrolling the codes of the monitor, basic function, and extended function modes.
- Below is an example where monitor mode code "d001" is changed to extended function code "A029".

1. Display the monitor mode code.
   ("d001" is displayed.)

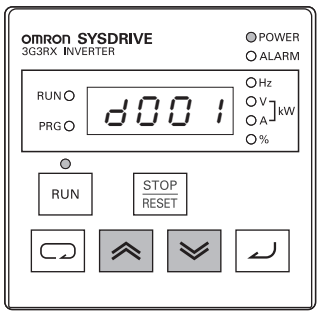

Press and simultaneously. *1
*2 *3

2. Change the extended function mode.

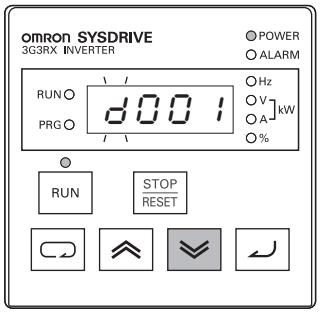

- "d" of the 4th digit on the left starts to blink.

Press (2 times).
("A001" is displayed.)

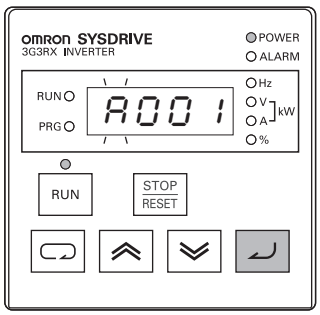

*3

- "A" blinks.
- Press the Enter key to fix the blinking digit.

Press .
*2
("A" is entered.)

(Continued to the next page)

3. Change the 3rd digit of the extended function code.

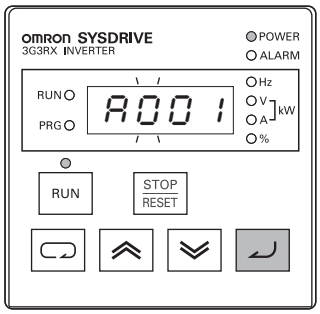

- "0" of the 3rd digit blinks.
- Press the Enter key to fix "0" of the 3rd digit as you need not change it.

*2 Press .
("0" is entered.)

4. Change the 2nd digit of the extended function code.

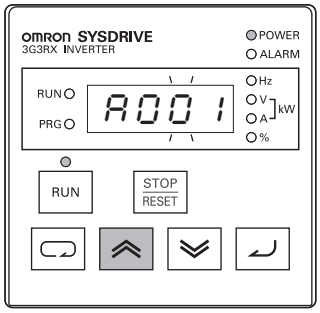

- "0" of the 2nd digit blinks.

Press (2 times).

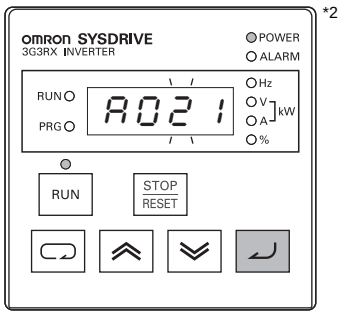

*2

- "2" of the 2nd digit blinks.

*2 Press .
("A021" is displayed.)

(Continued to the next page)

5. Change the 1st digit of the extended function code.

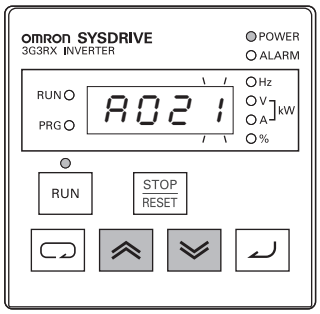

• "1" of the 1st digit blinks.

Press ⋀⋀ or ⋁⋁ ("A029" is displayed).
(8 times) (2 times)

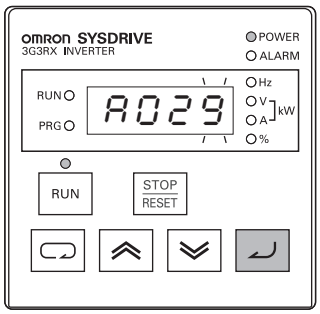

*2

• "9" of the 1st digit blinks.

Press ↵.
("9" is entered.)

6. The extended function code setting is complete.

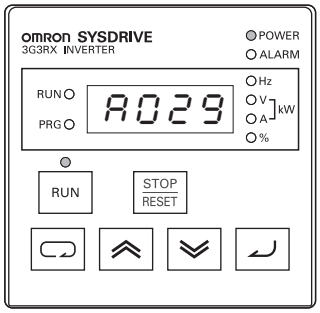

• The code display "A029" selection is complete.

Note: "A" of the 4th digit on the left starts to blink again when entering codes which have not been selected for display or codes not on the list.

Refer to "Display Selection" (page 4-53), "Initial Screen Selection (Initial Screen at Power-ON)" (page 4-56), "User Parameter Automatic Setting Function" (page 4-57), and "Appendix Parameter List" to check the code, and enter again.

7. Press the Mode key to display the data. Use the Increment/Decrement keys to change the data and press the Enter key to set it.*4
The data can be set in the same procedure as 1 to 6.*3 *4

*1 This operation is available even if code "d001" is not displayed.
*2 If pressing the Mode key while each digit is blinking, the display returns the status for the 1-digit higher entry.
*3 If pressing the Mode key while the 4th digit on the left is blinking, the values under entry are canceled and the display returns to the status before pressing the Increment and Decrement keys simultaneously in 1.
*4 To change the data, be sure to press the Mode key.

3-7 Parameter List

Monitor Mode (d□□□)

• The default setting displays "d001" at power-on. To select the optional display, change the setting in "b038".

Parameter No.	Function name	Monitor or data range	Default setting	Changes during operation		Unit	Page
				Normal	b031 = 10		
d001	Output frequency monitor	0.0 to 400.0	—	Yes	—	Hz	4-1
d002	Output current monitor	0.0 to 999.9 1000 to 9999	—	—	—	A	4-1
d003	Rotation direction monitor	F: Forward o: Stop r: Reverse	—	—	—	—	4-1
d004	PID feedback value monitor	0.00 to 99.99 100.0 to 999.9 1000. to 9999. 1000 to 9999 (10000 to 99990) ⌈100 to ⌈999 (100000 to 999000) (Enabled when the PID function is selected)	—	—	—	—	4-1
d005	Multi-function input monitor	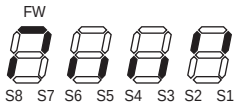 (Example) Terminals FW, S7, S2, S1 : ON Terminals S8, S6, S5, S4, S3: OFF	—	—	—	—	4-2
d006	Multi-function output monitor	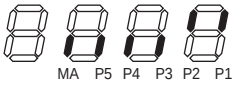 (Example) Terminals P2, P1 : ON Terminals MA, P5, P4, P3: OFF	—	—	—	—	4-2
d007	Output frequency monitor (after conversion)	0.00 to 99.99 100.0 to 999.9 1000. to 9999. 1000 to 3996 (10000 to 39960) (Output frequency × Conversion factor of b086)	—	Yes	—	—	4-2
d008	Real frequency monitor	-400. to -100. -99.9 to 0.00 to 99.99 100.0 to 400.0	—	—	—	Hz	4-3
d009	Torque reference monitor	-200. to +200.	—	—	—	%	4-3
d010	Torque bias monitor	-200. to +200.	—	—	—	%	4-3
d012	Output torque monitor	-200. to +200.	—	—	—	%	4-3
d013	Output voltage monitor	0. to 600.	—	—	—	V	4-4

Parameter No.	Function name	Monitor or data range	Default setting	Changes during operation		Unit	Page
				Normal	b031 = 10		
d014	Input power monitor	0.0 to 999.9	—	—	—	kW	4-4
d015	Integrated power monitor	0.0 to 999.9 1000. to 9999. 1000 to 9999 (10000 to 99990) ⌈100 to ⌈999 (100000 to 999000)	—	—	—	—	4-4
d016	Total RUN time	0. to 9999. 1000 to 9999 (10000 to 99990) ⌈100 to ⌈999 (100000 to 999000)	—	—	—	h	4-4
d017	Power ON time monitor	0. to 9999. 1000 to 9999 (10000 to 99990) ⌈100 to ⌈999 (100000 to 999000)	—	—	—	h	4-5
d018	Fin temperature monitor	-020. to 200.0	—	—	—	°C	4-5
d019	Motor temperature monitor	-020. to 200.0	—	—	—	°C	4-5
d022	Life assessment monitor	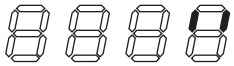 ON 1: Capacitor on the main circuit board OFF 2: Cooling fan rotation speed reduced	—	—	—	—	4-5
d023	Not used	—	—	—	—	—	—
d024	Not used	—	—	—	—	—	—
d025	Not used	—	—	—	—	—	—
d026	Not used	—	—	—	—	—	—
d027	Not used	—	—	—	—	—	—
d028	Pulse counter monitor	0 to 2147483647 (Displays MSB 4 digits)	—	—	—	—	4-5
d029	Position command monitor	-1073741823 to 1073741823 (Displays MSB 4 digits including "-")	—	—	—	—	4-6
d030	Current position monitor	-1073741823 to 1073741823 (Displays MSB 4 digits including "-")	—	—	—	—	4-6 4-132
d080	Fault frequency monitor	0. to 9999. 1000 to 6553 (10000 to 65530)	—	—	—	Time	4-6
d081	Fault monitor 1 (Latest)	Error code (condition of occurrence) →Output frequency [Hz] → Output current [A] →Internal DC voltage [V] →RUN time [h] →ON time [h]	—	—	—	—	4-6
d082	Fault monitor 2						4-6
d083	Fault monitor 3						4-6
d084	Fault monitor 4						4-6
d085	Fault monitor 5						4-6
d086	Fault monitor 6						4-6
d090	Warning monitor	Warning code	—	—	—	—	4-7
d102	DC voltage monitor	0.0 to 999.9	—	—	—	V	4-7

Parameter No.	Function name	Monitor or data range	Default setting	Changes during operation		Unit	Page
				Normal	b031 = 10		
d103	Regenerative braking load rate monitor	0.0 to 100.0	—	—	—	%	4-7
d104	Electronic thermal monitor	0.0 to 100.0	—	—	—	%	4-7

Basic Function Mode (F□□□)

Parameter No.	Function name	Monitor or data range	Default setting	Changes during operation		Unit	Page
				Normal	b031 = 10		
F001	Output frequency setting/monitor	0.0/Starting frequency to 1st/2nd/3rd max. frequency 0.0 to 100.0 (PID control enabled)	—	Yes	Yes	Hz	4-8
F002	Acceleration time 1	0.01 to 99.99 100.0 to 999.9 1000. to 3600.	30.00	Yes	Yes	s	4-8
F202	* 2nd acceleration time 1	0.01 to 99.99 100.0 to 999.9 1000. to 3600.	30.00	Yes	Yes	s	4-8
F302	* 3rd acceleration time 1	0.01 to 99.99 100.0 to 999.9 1000. to 3600.	30.00	Yes	Yes	s	4-8
F003	Deceleration time 1	0.01 to 99.99 100.0 to 999.9 1000. to 3600.	30.00	Yes	Yes	s	4-8
F203	* 2nd deceleration time 1	0.01 to 99.99 100.0 to 999.9 1000. to 3600.	30.00	Yes	Yes	s	4-8
F303	* 3rd deceleration time 1	0.01 to 99.99 100.0 to 999.9 1000. to 3600.	30.00	Yes	Yes	s	4-8
F004	Operator rotation direction selection	00: (Forward) 01: (Reverse)	00	No	No	—	4-10

* 2nd/3rd control is displayed when "SET(08)/SET3(17)" is allocated to one of multi-function inputs from C001 to C008.

Extended Function Mode

Parameter No.		Function name	Monitor or data range	Default setting	Changes during operation		Unit	Page
					Normal	b031 = 10		
Basic setting	A001	Frequency reference selection	00: Digital Operator (FREQ adjuster) (Enabled when 3G3AX-OP01 is used.) 01: Terminal 02: Digital Operator (F001) 03: ModBus communication 04: Option 1 05: Option 2 06: Pulse train frequency 07: Not used 10: Operation function result	02	No	No	—	4-10 4-138
	A002	RUN command selection	01: Terminal 02: Digital Operator (F001) 03: ModBus communication 04: Option 1 05: Option 2	02	No	No	—	4-11
	A003	Base frequency	30. to Maximum frequency [A004]	60.	No	No	Hz	4-11 4-109
	A203	* 2nd base frequency	30. to 2nd maximum frequency [A204]	60.				4-11
	A303	* 3rd base frequency	30. to 3rd maximum frequency [A304]	60.				
	A004	Maximum frequency	30. to 400.	60.	No	No	Hz	4-12
	A204	* 2nd maximum frequency	30. to 400.	60.				
	A304	* 3rd maximum frequency	30. to 400.	60.				

* 2nd/3rd control is displayed when "SET(08)/SET3(17)" is allocated to one of multi-function inputs from C001 to C008.

Parameter No.		Function name	Monitor or data range	Default setting	Changes during operation		Unit	Page
					Normal	b031 = 10		
Analog input, Others	A005	FV/FI selection	00: Switches between FV/FI via terminal AT 01: Switches between FV/FE via terminal AT 02: Switches between FV/FREQ adjuster via terminal AT (Enabled only when 3G3AX-OP01 is used) 03: Switches between FI/FREQ adjuster via terminal AT (Enabled only when 3G3AX-OP01 is used) 04: Switches between FE/FREQ adjuster via terminal AT (Enabled only when 3G3AX-OP01 is used)	00	No	No	—	4-12
	A006	FE selection	00: FE only 01: FV/FI auxiliary frequency reference (not reversible) 02: FV/FI auxiliary frequency reference (reversible) 03: FE disabled	03	No	No	—	4-13
	A011	FV start frequency	0.00 to 99.99 100.0 to 400.0	0.00	No	Yes	Hz	4-14
	A012	FV end frequency	0.00 to 99.99 100.0 to 400.0	0.00	No	Yes	Hz	
	A013	FV start ratio	0. to FV end ratio	0.	No	Yes	%	
	A014	FV end ratio	FV start ratio to 100.	100.	No	Yes	%	
	A015	FV start selection	00: External start frequency (A011 set value) 01: 0 Hz	01	No	Yes	—	
	A016	FV, FE, FI sampling	1. to 30. 31. (with 500 ms filter ± 0.1 Hz hysteresis)	31.	No	Yes	—	4-16
	A017	Not used	Use "00". * Do not change.	00	No	No	—	—

* 2nd/3rd control is displayed when "SET(08)/SET3(17)" is allocated to one of multi-function inputs from C001 to C008.

Parameter No.		Function name	Monitor or data range	Default setting	Changes during operation		Unit	Page
					Normal	b031 = 10		
Multi-step speed, Jogging	A019	Multi-step speed selection	00: Binary: 16-step selection with 4 terminals 01: Bit: 8-step selection with 7 terminals	00	No	No	—	4-16
	A020	Multi-step speed reference 0	0.0/Starting frequency to Max. frequency	6.00	Yes	Yes	Hz	4-8 4-16
	A220	* 2nd multi-step speed reference 0	0.0/Starting frequency to 2nd Max. frequency	6.00	Yes	Yes	Hz	
	A320	* 3rd multi-step speed reference 0	0.0/Starting frequency to 3rd Max. frequency	6.00	Yes	Yes	Hz	
	A021	Multi-step speed reference 1	0.0/Starting frequency to Max. frequency	0.00	Yes	Yes	Hz	4-16
	A022	Multi-step speed reference 2		0.00				
	A023	Multi-step speed reference 3		0.00				
	A024	Multi-step speed reference 4		0.00				
	A025	Multi-step speed reference 5		0.00				
	A026	Multi-step speed reference 6		0.00				
	A027	Multi-step speed reference 7		0.00				
	A028	Multi-step speed reference 8		0.00				
	A029	Multi-step speed reference 9		0.00				
	A030	Multi-step speed reference 10		0.00				
	A031	Multi-step speed reference 11		0.00				
	A032	Multi-step speed reference 12		0.00				
	A033	Multi-step speed reference 13		0.00				
	A034	Multi-step speed reference 14		0.00				
	A035	Multi-step speed reference 15		0.00				

* 2nd/3rd control is displayed when "SET(08)/SET3(17)" is allocated to one of multi-function inputs from C001 to C008.

Parameter No.		Function name	Monitor or data range	Default setting	Changes during operation		Unit	Page
					Normal	b031 = 10		
Multi-step speed, Jogging	A038	Jogging frequency	0.00/Starting frequency to 9.99	6.00	Yes	Yes	Hz	4-18
	A039	Jogging stop selection	00: Free running on jogging stop/ Disabled in operation 01: Deceleration stop on jogging stop/ Disabled in operation 02: DC injection braking on jogging stop/ Disabled in operation 03: Free running on jogging stop/ Enabled in operation 04: Deceleration stop on jogging stop/ Enabled in operation 05: DC injection braking on jogging stop/ Enabled in operation	00	No	Yes	—	
V/f characteristics	A041	Torque boost selection	00: Manual torque boost 01: Automatic torque boost	00	No	No	—	4-19
	A241	* 2nd torque boost selection		00				
	A042	Manual torque boost voltage	0.0 to 20.0	1.0	Yes	Yes	%	
	A242	* 2nd manual torque boost voltage		1.0				
	A342	* 3rd manual torque boost voltage		1.0				
	A043	Manual torque boost frequency	0.0 to 50.0	5.0	Yes	Yes	%	
	A243	* 2nd manual torque boost frequency		5.0				
	A343	* 3rd manual torque boost frequency		5.0				
	A044	V/f characteristics selection	00: Constant torque characteristics (VC) 01: Special reduced torque characteristics (special VP) 02: Free V/f characteristics 03: Sensorless vector control (SLV) 04: 0-Hz sensorless vector control 05: Sensor vector control (V2)	00	No	No	—	4-21
	A244	* 2nd V/f characteristics selection	00: Constant torque characteristics (VC) 01: Special reduced torque characteristics (special VP) 02: Free V/f characteristics 03: Sensorless vector control (SLV) 04: 0-Hz sensorless vector control	00				
	A344	* 3rd V/f characteristics selection	00: Constant torque characteristics (VC) 01: Special reduced torque characteristics (special VP)	00				
	A045	Output voltage gain	20. to 100.	100.	Yes	Yes	%	4-24

* 2nd/3rd control is displayed when "SET(08)/SET3(17)" is allocated to one of multi-function inputs from C001 to C008.

Parameter No.		Function name	Monitor or data range	Default setting	Changes during operation		Unit	Page
					Normal	b031 = 10		
V/f characteristics	A046	Automatic torque boost voltage compensation gain	0. to 255.	100.	Yes	Yes	—	4-20
	A246	* 2nd automatic torque boost voltage compensation gain	0. to 255.	100.				
	A047	Automatic torque boost slip compensation gain	0. to 255.	100.	Yes	Yes	—	
	A247	* 2nd automatic torque boost slip compensation gain	0. to 255.	100.				
DC injection braking	A051	DC injection braking selection	00: Disabled 01: Enabled 02: Frequency control [A052 set value]	00	No	Yes	—	4-24 4-109
	A052	DC injection braking frequency	0.00 to 99.99 100.0 to 400.0	0.50	No	Yes	Hz	4-24
	A053	DC injection braking delay time	0.0 to 5.0	0.0	No	Yes	s	4-24
	A054	DC injection braking power	0. to 100. (0.4 to 55 kW)	50.	No	Yes	%	
			0. to 80. (75 to 132 kW)	40.	No	Yes	%	
	A055	DC injection braking time	0.0 to 60.0	0.5	No	Yes	s	
	A056	DC injection braking method selection	00: Edge operation 01: Level operation	01	No	Yes	—	
	A057	Startup DC injection braking power	0. to 100. (0.4 to 55 kW) 0. to 80. (75 to 132 kW)	0.	No	Yes	%	
	A058	Startup DC injection braking time	0.0 to 60.0	0.0	No	Yes	s	
	A059	DC injection braking carrier frequency	0.5 to 15.0 (0.4 to 55 kW)	5.0	No	No	kHz	
			0.5 to 10.0 (75 to 132 kW)	3.0	No	No	kHz	
Upper/Lower limiter, Jump	A061	Frequency upper limit	0.00/Frequency lower limit to Max. frequency	0.00	No	Yes	Hz	4-28
	A261	* 2nd frequency upper limit	0.00/2nd frequency lower limit to 2nd Max. frequency	0.00				
	A062	Frequency lower limit	0.00/Starting frequency to Frequency upper limit	0.00	No	Yes	Hz	
	A262	* 2nd frequency lower limit	0.00/Starting frequency to 2nd frequency upper limit	0.00				

* 2nd/3rd control is displayed when "SET(08)/SET3(17)" is allocated to one of multi-function inputs from C001 to C008.

Parameter No.		Function name	Monitor or data range	Default setting	Changes during operation		Unit	Page
					Normal	b031 = 10		
Upper/Lower limit, Jump	A063	Jump frequency 1	Jump frequency: 0.0 to 400.0 Jump frequency width: 0.0 to 10.0	0.00	No	Yes	Hz	4-30
	A064	Jump frequency width 1		0.50				
	A065	Jump frequency 2		0.00				
	A066	Jump frequency width 2		0.50				
	A067	Jump frequency 3		0.00				
	A068	Jump frequency width 3		0.50				
	A069	Acceleration stop frequency	0.00 to 99.99 100.0 to 400.0	0.00	No	Yes	Hz	
	A070	Acceleration stop time	0.0 to 60.0	0.0	No	Yes	s	
PID control	A071	PID selection	00: Disabled 01: Enabled 02: Reverse output enabled	00	No	Yes	—	4-31
	A072	PID P gain	0.2 to 5.0	1.0	Yes	Yes	—	
	A073	PID I gain	0.0 to 999.9 1000. to 3600.	1.0	Yes	Yes	s	
	A074	PID D gain	0.00 to 99.99 100.0	0.00	Yes	Yes	s	
	A075	PID scale	0.01 to 99.99	1.00	No	Yes	Time	
	A076	PID feedback selection	00: FI 01: FV 02: RS485 communication 03: Pulse train frequency 10: Operation function output	00	No	Yes	—	
	A077	Reverse PID function	00: OFF (Deviation = Target value - Feedback value) 01: ON (Deviation = Feedback value - Target value)	00	No	Yes	—	
	A078	PID output limit function	0.0 to 100.0	0.0	No	Yes	%	
PID control	A079	PID feedforward selection	00: Disabled 01: FV 02: FI 03: FE	00	No	Yes	—	4-31
AVR	A081	AVR selection	00: Always ON 01: Always OFF 02: OFF during deceleration	02	No	No	—	4-35
	A082	AVR voltage selection	200-V class: 200/215/220/230/240 400-V class: 380/400/415/440/460/480	200/400	No	No	V	

* 2nd/3rd control is displayed when "SET(08)/SET3(17)" is allocated to one of multi-function inputs from C001 to C008.

Parameter No.		Function name	Monitor or data range	Default setting	Changes during operation		Unit	Page
					Normal	b031 = 10		
RUN mode, Acceleration/Deceleration functions	A085	RUN mode selection	00: Normal operation 01: Energy-saving operation 02: Automatic operation	00	No	No	—	4-36
	A086	Energy-saving response/accuracy adjustment	0.0 to 100.0	50.0	Yes	Yes	—	
	A092	Acceleration time 2	0.01 to 99.99 100.0 to 999.9 1000. to 3600.	15.00	Yes	Yes	s	4-37
	A292	* 2nd acceleration time 2		15.00				
	A392	* 3rd acceleration time 2		15.00				
	A093	Deceleration time 2		15.00				
	A293	* 2nd deceleration time 2		15.00				
	A393	* 3rd deceleration time 2		15.00				
	A094	2-step acceleration/ deceleration selection	00: Switched via multi-function input 09 (2CH) 01: Switched by setting 02: Enabled only when switching forward/ reverse	00	No	No	—	
	A294	* 2nd 2-step acceleration/ deceleration selection		00				
	A095	2-step acceleration frequency	0.00 to 99.99 100.0 to 400.0	0.00	No	No	Hz	
	A295	* 2nd 2-step acceleration frequency		0.00				
	A096	2-step deceleration frequency		0.00	No	No	Hz	
	A296	* 2nd 2-step deceleration frequency		0.00				
	A097	Acceleration pattern selection	00: Line 01: S-shape curve 02: U-shape curve 03: Inverted U-shape curve 04: EL-S-shape curve	00	No	No	—	4-38
	A098	Deceleration pattern selection		00	No	No	—	

* 2nd/3rd control is displayed when "SET(08)/SET3(17)" is allocated to one of multi-function inputs from C001 to C008.

Parameter No.		Function name	Monitor or data range	Default setting	Changes during operation		Unit	Page
					Normal	b031 = 10		
External frequency adjustment	A101	FI start frequency	0.00 to 99.99 100.0 to 400.0	0.00	No	Yes	Hz	4-14
	A102	FI end frequency		0.00	No	Yes	Hz	
	A103	FI start ratio	0. to FI end ratio	20.	No	Yes	%	
	A104	FI end ratio	FI start ratio to 100.	100.	No	Yes	%	
	A105	FI start selection	00: Use FI start frequency [A101] 01: 0 Hz	00	No	Yes	—	
	A111	FE start frequency	-400. to -100. -99.9 to 0.00 to 99.99 100.0 to 400.0	0.00	No	Yes	Hz	4-15
	A112	FE end frequency		0.00	No	Yes	Hz	
	A113	FE start ratio	-100. to FE end ratio	-100.	No	Yes	%	
	A114	FE end ratio	FE start ratio to 100.	100.	No	Yes	%	
Acceleration/Deceleration	A131	Acceleration curve parameter	01 (small curve) to 10 (large curve)	02	No	Yes	—	4-39
	A132	Deceleration curve parameter		02	No	Yes	—	
Operation frequency	A141	Operation frequency input A setting	00: Digital Operator (F001) 01: Digital Operator (FREQ adjuster) (Enabled when 3G3AX-OP01 is used.) 02: Input FV 03: Input FI 04: RS485 communication 05: Option 1 06: Option 2 07: Pulse train frequency	02	No	Yes	—	4-41
	A142	Operation frequency input B setting		03	No	Yes	—	
	A143	Operator selection	00: Addition (A + B) 01: Subtraction (A - B) 02: Multiplication (A × B)	00	No	Yes	—	
	A145	Frequency addition amount	0.00 to 99.99 100.0 to 400.0	0.00	No	Yes	Hz	4-41
	A146	Frequency addition direction	00: Add A145 value to output frequency 01: Subtract A145 value from output frequency	00	No	Yes	—	

* 2nd/3rd control is displayed when "SET(08)/SET3(17)" is allocated to one of multi-function inputs from C001 to C008.

Parameter No.		Function name	Monitor or data range	Default setting	Changes during operation		Unit	Page
					Normal	b031 = 10		
Acceleration/Deceleration	A150	EL-S-curve ratio 1 during acceleration	0. to 50.	25.	No	No	%	4-39
	A151	EL-S-curve ratio 2 during acceleration	0. to 50.	25.	No	No	%	
	A152	EL-S-curve ratio 1 during deceleration	0. to 50.	25.	No	No	%	
	A153	EL-S-curve ratio 2 during deceleration	0. to 50.	25.	No	No	%	
Momentary power interruption/Trip restart	b001	Retry selection	00: Alarm 01: 0 Hz start 02: Frequency matching start 03: Trip after frequency matching deceleration stop 04: Frequency pull-in restart	00	No	Yes	—	4-42
	b002	Allowable momentary power interruption time	0.3 to 25.0	1.0	No	Yes	s	
	b003	Retry wait time	0.3 to 100.0	1.0	No	Yes	s	4-85
	b004	Momentary power interruption/ undervoltage trip during stop selection	00: Disabled 01: Enabled 02: Disabled during stop and deceleration stop	00	No	Yes	—	4-42
	b005	Momentary power interruption retry time selection	00: 16 times 01: No limit	00	No	Yes	—	
	b006	Input phase loss protection selection	00: Disabled 01: Enabled	00	No	Yes	—	4-46
	b007	Frequency matching lower limit frequency setting	0.00 to 99.99 100.0 to 400.0	0.00	No	Yes	Hz	4-42 4-68 4-85
	b008	Trip retry selection	00: Trip 01: 0 Hz start 02: Frequency matching start 03: Trip after frequency matching deceleration stop 04: Frequency pull-in restart	00	No	Yes	—	4-42
	b009	Undervoltage retry time selection	00: 16 times 01: No limit	00	No	Yes	—	4-43
	b010	Overvoltage/ overcurrent retry time selection	1 to 3	3	No	Yes	Time	
	b011	Trip retry wait time	0.3 to 100.0	1.0	No	Yes	s	

* 2nd/3rd control is displayed when "SET(08)/SET3(17)" is allocated to one of multi-function inputs from C001 to C008.

	Parameter No.	Function name	Monitor or data range	Default setting	Changes during operation		Unit	Page
					Normal	b031 = 10		
Electronic Thermal	b012	Electronic thermal level	0.20 × Rated current to 1.00 × Rated current	Rated current	No	Yes	A	4-46
	b212	* 2nd electronic thermal level						
	b312	* 3rd electronic thermal level						
	b013	Electronic thermal characteristics selection	00: Reduced torque characteristics 01: Constant torque characteristics 02: Free setting	00	No	Yes	—	
	b213	* 2nd electronic thermal characteristics selection						
	b313	* 3rd electronic thermal characteristics selection						
	b015	Free setting, electronic thermal frequency 1	0. to 400.	0.	No	Yes	Hz	4-47
	b017	Free setting, electronic thermal frequency 2						
	b019	Free setting, electronic thermal frequency 3						
	b016	Free setting, electronic thermal current 1	0.0 to Rated current	0.0	No	Yes	A	
	b018	Free setting, electronic thermal current 2						
	b020	Free setting, electronic thermal current 3						

* 2nd/3rd control is displayed when "SET(08)/SET3(17)" is allocated to one of multi-function inputs from C001 to C008.

Parameter No.		Function name	Monitor or data range	Default setting	Changes during operation		Unit	Page
					Normal	b031 = 10		
Overload limit, Overcurrent Protection	b021	Overload limit selection	00: Disabled 01: Enabled in acceleration/constant speed operation 02: Enabled in constant speed operation 03: Enabled in acceleration/constant speed operation (Accelerates during regeneration)	01	No	Yes	—	4-49
	b022	Overload limit level	0.20 × Rated current to 2.00 × Rated current (0.4 to 55 kW) 0.20 × Rated current to 1.80 × Rated current (75 to 132 kW)	1.50 × Rated current	No	Yes	A	
	b023	Overload limit parameter	0.10 to 30.00	1.00	No	Yes	s	
	b024	Overload limit selection 2	00: Disabled 01: Enabled in acceleration/constant speed operation 02: Enabled in constant speed operation 03: Enabled in acceleration/constant speed operation (Accelerates during regeneration)	01	No	Yes	—	
	b025	Overload limit level 2	0.20 × Rated current to 2.00 × Rated current (0.4 to 55 kW) 0.20 × Rated current to 1.80 × Rated current (75 to 132 kW)	1.50 × Rated current	No	Yes	A	
	b026	Overload limit parameter 2	0.10 to 30.00	1.00	No	Yes	s	
	b027	Overcurrent suppression function	00: Disabled 01: Enabled	01	No	Yes	—	4-51
	b028	Frequency pull-in restart level	0.20 × Rated current to 2.00 × Rated current (0.4 to 55 kW) 0.20 × Rated current to 1.80 × Rated current (75 to 132 kW)	Rated current	No	Yes	A	4-43 4-69
	b029	Frequency pull-in restart parameter	0.10 to 30.00	0.50	No	Yes	s	
	b030	Starting frequency at frequency pull-in restart	00: Frequency at interruption 01: Max. frequency 02: Set frequency	00	No	Yes	—	

* 2nd/3rd control is displayed when "SET(08)/SET3(17)" is allocated to one of multi-function inputs from C001 to C008.

Parameter No.		Function name	Monitor or data range	Default setting	Changes during operation		Unit	Page
					Normal	b031 = 10		
Lock	b031	Soft lock selection	00: Data other than b031 cannot be changed when terminal SFT is ON. 01: Data other than b031 and the specified frequency parameter cannot be changed when terminal SFT is ON. 02: Data other than b031 cannot be changed. 03: Data other than b031 and the specified frequency parameter cannot be changed. 10: Data can be changed during RUN.	01	No	Yes	—	4-51
Others	b034	RUN time/Power ON time setting	0. to 9999. (0 to 99990) 1000 to 6553 (100000 to 655300)	0.	No	Yes	h	4-52
	b035	Rotation direction limit selection	00: Forward and Reverse are enabled 01: Only Forward is enabled. 02: Only Reverse is enabled.	00	No	No	—	4-52
	b036	Reduced voltage startup selection	0 (Reduced voltage startup time: small) to 255 (Reduced voltage startup time: large)	6	No	Yes	—	4-53
	b037	Display selection	00: Complete display 01: Individual display of functions 02: User setting 03: Data comparison display 04: Basic display	04	No	Yes	—	4-53
	b038	Initial screen selection	00: Screen when the Enter key was pressed last 01: d001 02: d002 03: d003 04: d007 05: F001	01	No	Yes	—	4-56
	b039	User parameter automatic setting function selection	00: Disabled 01: Enabled	00	No	Yes	—	4-57

* 2nd/3rd control is displayed when "SET(08)/SET3(17)" is allocated to one of multi-function inputs from C001 to C008.

Parameter No.		Function name	Monitor or data range	Default setting	Changes during operation		Unit	Page
					Normal	b031 = 10		
Torque limit	b040	Torque limit selection	00: Four-quadrant separate setting 01: Terminal switch 02: Analog input 03: Option 1 04: Option 2	00	No	Yes	—	4-57 4-59
	b041	Torque limit 1 (Four-quadrant mode forward power running)	0. to 200. (0.4 to 55 kW) 0. to 180. (75 to 132 kW) no (Torque limit disabled)	150.	No	Yes	%	4-57 4-59
	b042	Torque limit 2 (Four-quadrant mode reverse regeneration)	0. to 200. (0.4 to 55 kW) 0. to 180. (75 to 132 kW) no (Torque limit disabled)	150.	No	Yes	%	4-57 4-59
	b043	Torque limit 3 (Four-quadrant mode reverse power running)	0. to 200. (0.4 to 55 kW) 0. to 180. (75 to 132 kW) no (Torque limit disabled)	150.	No	Yes	%	
	b044	Torque limit 4 (Four-quadrant mode forward regeneration)	0. to 200. (0.4 to 55 kW) 0. to 180. (75 to 132 kW) no (Torque limit disabled)	150.	No	Yes	%	
	b045	Torque LADSTOP selection	00: Disabled 01: Enabled	00	No	Yes	—	4-59

* 2nd/3rd control is displayed when "SET(08)/SET3(17)" is allocated to one of multi-function inputs from C001 to C008.

Parameter No.		Function name	Monitor or data range	Default setting	Changes during operation		Unit	Page
					Normal	b031 = 10		
Others	b046	Reverse rotation prevention selection	00: Disabled 01: Enabled	00	No	Yes	—	4-59
	b050	Selection of non-stop function at momentary power interruption	00: Disabled 01: Enabled (deceleration stop) 02: Enabled (without recovery) 03: Enabled (with recovery)	00	No	No	—	4-60
	b051	Starting voltage of non-stop function at momentary power interruption	0.0 to 999.9 1000.	220/ 440	No	No	V	
	b052	Stop deceleration level of non-stop function at momentary power interruption	0.0 to 999.9 1000.	360/ 720	No	No	V	
	b053	Deceleration time of non-stop function at momentary power interruption	0.01 to 99.99 100.0 to 999.9 1000. to 3600.	1.00	No	No	s	
	b054	Deceleration starting width of non-stop function at momentary power interruption	0.00 to 10.00	0.00	No	No	Hz	
	b055	Proportional gain setting of non-stop function at momentary power interruption	0.00 to 2.55	0.20	Yes	Yes	—	
	b056	Integral time setting of non-stop function at momentary power interruption	0.000 to 9.999/10.00 to 65.53	0.100	Yes	Yes	s	4-60

* 2nd/3rd control is displayed when "SET(08)/SET3(17)" is allocated to one of multi-function inputs from C001 to C008.

Parameter No.		Function name	Monitor or data range	Default setting	Changes during operation		Unit	Page
					Normal	b031 = 10		
Others	b060	Window comparator FV upper limit level	Set an upper limit level. Setting range: 0 to 100 Lower limit: Lower limit level + Hysteresis width × 2	100.	Yes	Yes	%	4-63
	b061	Window comparator FV lower limit level	Set a lower limit level. Setting range: 0 to 100 Upper limit: Upper limit level - Hysteresis width × 2	0.	Yes	Yes	%	
	b062	Window comparator FV hysteresis width	Set a hysteresis width for the upper and lower limit levels. Setting range: 0 to 10 Upper limit: (Upper limit level - Lower limit level) × 2	0.	Yes	Yes	%	
	b063	Window comparator FI upper limit level	Set an upper limit level. Setting range: 0 to 100 Lower limit: Lower limit level + Hysteresis width × 2	100.	Yes	Yes	%	
	b064	Window comparator FI lower limit level	Set a lower limit level. Setting range: 0 to 100 Upper limit: Upper limit level - Hysteresis width × 2	0.	Yes	Yes	%	
	b065	Window comparator FI hysteresis width	Set a hysteresis width for the upper and lower limit levels. Setting range: 0 to 10 Upper limit: (Upper limit level - Lower limit level) × 2	0.	Yes	Yes	%	
	b066	Window comparator FE upper limit level	Set an upper limit level. Setting range: -100 to 100 Lower limit: Lower limit level + Hysteresis width × 2	100.	Yes	Yes	%	
	b067	Window comparator FE lower limit level	Set a lower limit level. Setting range: -100 to 100 Upper limit: Upper limit level - Hysteresis width × 2	-100.	Yes	Yes	%	4-63
	b068	Window comparator FE hysteresis width	Set a hysteresis width for the upper and lower limit levels. Setting range: 0 to 10 Upper limit: (Upper limit level - Lower limit level) × 2	0.	Yes	Yes	%	
	b070	Analog operation level at FV disconnection	0. to 100./no (ignored)	no	No	Yes	—	
	b071	Analog operation level at FI disconnection	0. to 100./no (ignored)	no	No	Yes	—	
	b072	Analog operation level at FE disconnection	-100. to 100./no (ignored)	no	No	Yes	—	

* 2nd/3rd control is displayed when "SET(08)/SET3(17)" is allocated to one of multi-function inputs from C001 to C008.

Parameter No.		Function name	Monitor or data range	Default setting	Changes during operation		Unit	Page
					Normal	b031 = 10		
Others	b078	Integrated power clear	Cleared with the Enter key after changing to 01	00	Yes	Yes	—	4-4
	b079	Integrated power display gain	1. to 1000.	1.	Yes	Yes	—	
	b082	Starting frequency	0.10 to 9.99	0.50	No	Yes	Hz	4-65
	b083	Carrier frequency	0.5 to 15.0 (0.4 to 55 kW) *Derating enabled	5.0	No	No	kHz	4-65 4-117
			0.5 to 10.0 (75 to 132 kW) *Derating enabled	3.0	No	No	kHz	
	b084	Initialization selection	00: Clears the trip monitor 01: Initializes data 02: Clears the trip monitor and initializes data	00	No	No	—	4-66
	b085	Initialization parameter selection	00 *Do not change.	00	No	No	—	
	b086	Frequency conversion coefficient	0.1 to 99.0	1.0	Yes	Yes	—	4-2
	b087	STOP key selection	00: Enabled 01: Disabled 02: Disabled only during stop	00	No	Yes	—	4-68
	b088	Free-run stop selection	00: 0 Hz start 01: Frequency matching start 02: Frequency pull-in restart	00	No	Yes	—	4-69
	b089	Automatic carrier reduction	00: Disabled 01: Enabled	00	No	No	—	4-71
	b090	Usage rate of regenerative braking function	0.0 to 100.0	0.0	No	Yes	%	4-72
	b091	Stop selection	00: Deceleration → Stop 01: Free-run stop	00	No	Yes	—	4-68
	b092	Cooling fan control	00: Always ON 01: ON during RUN	01	No	Yes	—	4-72
	b095	Regenerative braking function operation selection	00: Disabled 01: Enabled (Disabled during stop) 02: Enabled (Enabled during stop)	00	No	Yes	—	
	b096	Regenerative braking function ON level	330 to 380 660 to 760	360/ 720	No	Yes	V	
	b098	Thermistor selection	00: Disabled 01: PTC enabled 02: NTC enabled	00	No	Yes	—	4-73
	b099	Thermistor error level	0. to 9999.	3000.	No	Yes	Ω	

* 2nd/3rd control is displayed when "SET(08)/SET3(17)" is allocated to one of multi-function inputs from C001 to C008.

Parameter No.		Function name	Monitor or data range	Default setting	Changes during operation		Unit	Page
					Normal	b031 = 10		
Vf free setting	b100	Free V/f frequency 1	0. to Free V/f frequency 2	0.	No	No	Hz	4-23
	b101	Free V/f voltage 1	0.0 to 800.0	0.0	No	No	V	
	b102	Free V/f frequency 2	0. to Free V/f frequency 3	0.	No	No	Hz	
	b103	Free V/f voltage 2	0.0 to 800.0	0.0	No	No	V	
	b104	Free V/f frequency 3	0. to Free V/f frequency 4	0.	No	No	Hz	
	b105	Free V/f voltage 3	0.0 to 800.0	0.0	No	No	V	
	b106	Free V/f frequency 4	0. to Free V/f frequency 5	0.	No	No	Hz	
	b107	Free V/f voltage 4	0.0 to 800.0	0.0	No	No	V	
	b108	Free V/f frequency 5	0. to Free V/f frequency 6	0.	No	No	Hz	
	b109	Free V/f voltage 5	0.0 to 800.0	0.0	No	No	V	
	b110	Free V/f frequency 6	0. to Free V/f frequency 7	0.	No	No	Hz	
	b111	Free V/f voltage 6	0.0 to 800.0	0.0	No	No	V	
	b112	Free V/f frequency 7	0. to 400.	0.	No	No	Hz	
	b113	Free V/f voltage 7	0.0 to 800.0	0.0	No	No	V	

* 2nd/3rd control is displayed when "SET(08)/SET3(17)" is allocated to one of multi-function inputs from C001 to C008.

Parameter No.		Function name	Monitor or data range	Default setting	Changes during operation		Unit	Page
					Normal	b031 = 10		
Others	b120	Brake control selection	00: Disabled 01: Enabled	00	No	Yes	—	4-75
	b121	Brake wait time for release	0.00 to 5.00	0.00	No	Yes	s	
	b122	Brake wait time for acceleration	0.00 to 5.00	0.00	No	Yes	s	
	b123	Brake wait time for stopping	0.00 to 5.00	0.00	No	Yes	s	
	b124	Brake wait time for confirmation	0.00 to 5.00	0.00	No	Yes	s	
	b125	Brake release frequency	0.00 to 99.99 100.0 to 400.0	0.00	No	Yes	Hz	
	b126	Brake release current	0.0 to 2.00 × Rated current (0.4 to 55 kW) 0.0 to 1.80 × Rated current (75 to 132 kW)	Rated current	No	Yes	—	
	b127	Brake input frequency	0.00 to 99.99 100.0 to 400.0	0.00	No	Yes	Hz	
	b130	Overvoltage protection function selection during deceleration	00: Disabled 01: DC voltage kept constant 02: Acceleration enabled	00	No	Yes	—	4-76
	b131	Overvoltage protection level during deceleration	200-V class: 330 to 390 400-V class: 660 to 780	380/ 760	No	Yes	V	
	b132	Overvoltage protection parameter	0.10 to 30.00	1.00	No	Yes	s	
	b133	Overvoltage protection proportional gain setting	0.00 to 2.55	0.50	Yes	Yes	—	
	b134	Overvoltage protection integral time setting	0.000 to 9.999 10.000 to 65.53	0.060	Yes	Yes	s	

* 2nd/3rd control is displayed when "SET(08)/SET3(17)" is allocated to one of multi-function inputs from C001 to C008.

Parameter No.		Function name	Monitor or data range	Default setting	Changes during operation		Unit	Page
					Normal	b031 = 10		
Multi-function input terminals	C001	Multi-function input 1 selection *1	01: RV (reverse) 02: CF1 (multi-step speed setting binary 1) 03: CF2 (multi-step speed setting binary 2) 04: CF3 (multi-step speed setting binary 3) 05: CF4 (multi-step speed setting binary 4) 06: JG (jogging) 07: DB (external DC injection braking) 08: SET (2nd control) 09: 2CH (2-step acceleration/deceleration) 11: FRS (free-run stop) 12: EXT (external trip) 13: USP (USP function) 14: CS (commercial switch) 15: SFT (soft lock) 16: AT (analog input switching) 17: SET3 (3rd control) 18: RS (reset) 20: STA (3-wire start) 21: STP (3-wire stop) 22: F/R (3-wire forward/reverse) 23: PID (PID enabled/disabled) 24: PIDC (PID integral reset) 26: CAS (control gain switching) 27: UP (UP/DWN function accelerated) 28: DWN (UP/DWN function decelerated) 29: UDC (UP/DWN function data clear) 31: OPE (forced operator) 32: SF1 (multi-step speed setting bit 1) 33: SF2 (multi-step speed setting bit 2) 34: SF3 (multi-step speed setting bit 3) 35: SF4 (multi-step speed setting bit 4) 36: SF5 (multi-step speed setting bit 5) 37: SF6 (multi-step speed setting bit 6) 38: SF7 (multi-step speed setting bit 7) 39: OLR (overload limit switching) 40: TL (torque limit enabled) 41: TRQ1 (torque limit switching 1) 42: TRQ2 (torque limit switching 2) 43: PPI (P/PI switching) 44: BOK (Brake confirmation) 45: ORT (orientation) 46: LAC (LAD cancel) 47: PCLR (position deviation clear) 48: STAT (pulse train position command input permission) 50: ADD (frequency addition) 51: F-TM (forced terminal block) 52: ATR (torque command input permission) 53: KHC (integrated power clear) 54: SON (servo ON) 55: FOC (preliminary excitation) 56: Not used 57: Not used 58: Not used 59: Not used 60: Not used 61: Not used 62: Not used 63: Not used 65: AHD (analog command held) 66: CP1 (position command selection 1) 67: CP2 (position command selection 2) 68: CP3 (position command selection 3) 69: ORL (zero return limit signal) 70: ORG (zero return startup signal) 71: FOT (forward driving stop) 72: ROT (reverse driving stop) 73: SPD (speed/position switching) 74: PCNT (pulse counter) 75: PCC (pulse counter clear) no: NO (no allocation)	01 *1	No	Yes	—	4-77
	C002	Multi-function input 2 selection		18				
	C003	Multi-function input 3 selection *1		12 *1				
	C004	Multi-function input 4 selection		02				
	C005	Multi-function input 5 selection		03				
	C006	Multi-function input 6 selection		04				
	C007	Multi-function input 7 selection		05				
	C008	Multi-function input 8 selection		06				

*1. C001 and C003 are forcibly rewritten into 18 (RS) and 64 (EMR), respectively, when the emergency shutoff function is enabled (SW1 = ON). (64 cannot be set optionally.)
When SW1 is turned ON once and then OFF, C003 has no allocations ("no").

* 2nd/3rd control is displayed when "SET(08)/SET3(17)" is allocated to one of multi-function inputs from C001 to C008.

Parameter No.		Function name	Monitor or data range	Default setting	Changes during operation		Unit	Page
					Normal	b031 = 10		
Multi-function input terminals	C011	Multi-function input 1 operation selection	00: NO 01: NC	00	No	Yes	—	4-79
	C012	Multi-function input 2 operation selection		00				
	C013	Multi-function input 3 operation selection		00				
	C014	Multi-function input 4 operation selection		00				
	C015	Multi-function input 5 operation selection		00				
	C016	Multi-function input 6 operation selection		00				
	C017	Multi-function input 7 operation selection		00				
	C018	Multi-function input 8 operation selection		00				
	C019	FW terminal operation selection		00				

* 2nd/3rd control is displayed when "SET(08)/SET3(17)" is allocated to one of multi-function inputs from C001 to C008.

Parameter No.		Function name	Monitor or data range	Default setting	Changes during operation		Unit	Page
					Normal	b031 = 10		
Multi-function output terminal	C021	Multi-function output terminal P1 selection	00: RUN (signal during RUN) 01: FA1 (constant speed arrival signal) 02: FA2 (over set frequency arrival signal) 03: OL (overload warning) 04: OD (excessive PID deviation) 05: AL (alarm output) 06: FA3 (set-frequency-only arrival signal) 07: OTQ (overtorque) 08: IP (signal during momentary power interruption) 09: UV (signal during undervoltage) 10: TRQ (torque limit) 11: RNT (RUN time over) 12: ONT (Power ON time over) 13: THM (thermal warning) 19: BRK (brake release) 20: BER (brake error) 21: ZS (0 Hz signal) 22: DSE (excessive speed deviation) 23: POK (position ready) 24: FA4 (set frequency exceeded 2) 25: FA5 (set frequency only 2) 26: OL2 (overload warning 2) 27: FVDc (analog FV disconnection detection) 28: FIDc (analog FI disconnection detection) 29: FEDc (analog FE disconnection detection) 31: FBV (PID FB status output) 32: NDc (network error) 33: LOG1 (logic operation output 1) 34: LOG2 (logic operation output 2) 35: LOG3 (logic operation output 3) 36: LOG4 (logic operation output 4) 37: LOG5 (logic operation output 5) 38: LOG6 (logic operation output 6) 39: WAC (capacitor life warning signal) 40: WAF (cooling fan life warning signal) 41: FR (starting contact signal) 42: OHF (fin overheat warning) 43: LOC (light load detection signal) 44: Not used 45: Not used 46: Not used 47: Not used 48: Not used 49: Not used 50: IRDY (operation ready signal) 51: FWR (forward run signal) 52: RVR (reverse run signal) 53: MJA (fatal fault signal) 54: WCFV (window comparator FV) 55: WCFI (window comparator FI) 56: WCFE (window comparator FE) (When C062 is used to select the alarm code output, the multi-function output terminals P1 to P3, or P1 to P4 are forcibly changed to AC0 to AC2 or AC0 to AC3 [Acn 'Alarm code output'], respectively.)	00	No	Yes	—	4-92
	C022	Multi-function output terminal P2 selection		01				
	C023	Multi-function output terminal P3 selection		03				
	C024	Multi-function output terminal P4 selection		07				
	C025	Multi-function output terminal P5 selection		40				
	C026	Relay output (MA, MB) function selection		05				

* 2nd/3rd control is displayed when "SET(08)/SET3(17)" is allocated to one of multi-function inputs from C001 to C008.

Parameter No.		Function name	Monitor or data range	Default setting	Changes during operation		Unit	Page
					Normal	b031 = 10		
Analog monitor	C027	MP selection	00: Output frequency 01: Output current 02: Output torque 03: Digital output frequency 04: Output voltage 05: Input voltage 06: Thermal load rate 07: LAD frequency 08: Digital current monitor 09: Motor temperature 10: Fin temperature 12: Not used	00	No	Yes	—	4-106 4-116
	C028	AM selection	00: Output frequency 01: Output current 02: Output torque 04: Output voltage 05: Input voltage 06: Thermal load rate 07: LAD frequency 09: Motor temperature 10: Fin temperature 11: Output torque <signed> 13: Not used	00	No	Yes	—	4-107 4-116
	C029	AMI selection	00: Output frequency 01: Output current 02: Output torque 04: Output voltage 05: Input voltage 06: Thermal load rate 07: LAD frequency 09: Motor temperature 10: Fin temperature 14: Not used	00	No	Yes	—	
	C030	Digital current monitor reference value	0.20 × Rated current to 2.00 × Rated current (Current value at the digital current monitor output 1440 Hz)	Rated current	Yes	Yes	A	4-106

* 2nd/3rd control is displayed when "SET(08)/SET3(17)" is allocated to one of multi-function inputs from C001 to C008.

Parameter No.		Function name	Monitor or data range	Default setting	Changes during operation		Unit	Page
					Normal	b031 = 10		
Multi-function output terminal	C031	Multi-function output terminal P1 contact selection	00: NO contact at MA; NC contact at MB 01: NC contact at MA; NO contact at MB	00	No	Yes	—	4-93
	C032	Multi-function output terminal P2 contact selection						
	C033	Multi-function output terminal P3 contact selection						
	C034	Multi-function output terminal P4 contact selection						
	C035	Multi-function output terminal P5 contact selection						
	C036	Relay output (MA, MB) contact selection		01				
Level and output terminal status	C038	Light load signal output mode	00: Enabled during acceleration/ deceleration/constant speed 01: Enabled only during constant speed	01	No	Yes	—	4-103
	C039	Light load detection level	0.0 to 2.00 × Rated current (0.4 to 55 kW) 0.0 to 1.80 × Rated current (75 to 132 kW)	Rated current	Yes	Yes	A	
	C040	Overload warning signal output mode	00: Enabled during acceleration/ deceleration/constant speed 01: Enabled only during constant speed	01	No	Yes	—	4-49
	C041	Overload warning level	0.0: Does not operate. 0.1 × Rated current to 2.00 × Rated current (0.4 to 55 kW) 0.1 × Rated current to 1.80 × Rated current (75 to 132 kW)	Rated current	Yes	Yes	A	
	C042	Arrival frequency during acceleration	0.00 to 99.99 100.0 to 400.0	0.00	No	Yes	Hz	4-95
	C043	Arrival frequency during deceleration	0.00 to 99.99 100.0 to 400.0	0.00	No	Yes	Hz	
	C044	PID deviation excessive level	0.0 to 100.0	3.0	No	Yes	%	4-31
	C045	Arrival frequency during acceleration 2	0.00 to 99.99 100.0 to 400.0	0.00	No	Yes	Hz	4-95
	C046	Arrival frequency during deceleration 2	0.00 to 99.99 100.0 to 400.0	0.00	No	Yes	Hz	
	C052	PID FB upper limit	0.0 to 100.0	100.0	No	Yes	%	4-31
	C053	PID FB lower limit	0.0 to 100.0	0.0	No	Yes	%	

* 2nd/3rd control is displayed when "SET(08)/SET3(17)" is allocated to one of multi-function inputs from C001 to C008.

Parameter No.		Function name	Monitor or data range	Default setting	Changes during operation		Unit	Page
					Normal	b031 = 10		
Level and output terminal status	C055	Overtorque level (Forward power running)	0. to 200. (0.4 to 55 kW) 0. to 180. (75 to 132 kW)	100.	No	Yes	%	4-97
	C056	Overtorque level (Reverse regeneration)		100.	No	Yes	%	
	C057	Overtorque level (Reverse power running)		100.	No	Yes	%	
	C058	Overtorque level (Forward regeneration)		100.	No	Yes	%	
	C061	Thermal warning level	0. to 100.	80.	No	Yes	%	4-47
	C062	Alarm code selection	00: Disabled 01: 3-bit 02: 4-bit	00	No	Yes	—	4-98
	C063	0 Hz detection level	0.00 to 99.99 100.0	0.00	No	Yes	Hz	4-98
	C064	Fin overheat warning level	0. to 200.	120.	No	Yes	°C	4-102

* 2nd/3rd control is displayed when "SET(08)/SET3(17)" is allocated to one of multi-function inputs from C001 to C008.

Parameter No.		Function name	Monitor or data range	Default setting	Changes during operation		Unit	Page
					Normal	b031 = 10		
Communication function	C071	Communication speed selection (Baud rate selection)	02: Loop-back test 03: 2400 bps 04: 4800 bps 05: 9600 bps 06: 19200 bps	04	No	Yes	—	4-141
	C072	Communication station No. selection	1. to 32.	1.	No	Yes	—	
	C073	Communication bit length selection	7: 7-bit 8: 8-bit	7	No	Yes	—	
	C074	Communication parity selection	00: No parity 01: Even 02: Odd	00	No	Yes	—	
	C075	Communication stop bit selection	1: 1-bit 2: 2-bit	1	No	Yes	—	
	C076	Communication error selection	00: Trip 01: Trip after deceleration stop 02: Ignore 03: Free-run stop 04: Deceleration stop	02	No	Yes	—	
	C077	Communication error timeout	0.00 to 99.99	0.00	No	Yes	s	4-101 4-141
	C078	Communication wait time	0. to 1000.	0.	No	Yes	ms	4-141
	C079	Communication method selection	00: ASCII 01: ModBus-RTU	01	No	Yes	—	
Adjustment	C081	FV adjustment	0. to 9999. 1000 to 6553 (10000 to 65530)	Factory default	Yes	Yes	—	—
	C082	FI adjustment	0. to 9999. 1000 to 6553 (10000 to 65530)	Factory default	Yes	Yes	—	—
	C083	FE adjustment	0. to 9999. 1000 to 6553 (10000 to 65530)	Factory default	Yes	Yes	—	—
	C085	Thermistor adjustment	0.0 to 999.9 1000.	Factory default	Yes	Yes	—	4-73
	C091	Not used	Use "00". * Do not change.	00	No	No	—	—

* 2nd/3rd control is displayed when "SET(08)/SET3(17)" is allocated to one of multi-function inputs from C001 to C008.

Parameter No.		Function name	Monitor or data range	Default setting	Changes during operation		Unit	Page
					Normal	b031 = 10		
Others	C101	UP/DWN selection	00: Do not store the frequency data 01: Store the frequency data	00	No	Yes	—	4-88
	C102	Reset selection	00: Trip reset at power-on 01: Trip reset when the power is OFF 02: Enabled only during trip (Reset when the power is ON) 03: Trip reset only	00	Yes	Yes	—	4-85 4-132
	C103	Reset frequency matching selection	00: 0 Hz start 01: Frequency matching start 02: Frequency pull-in restart	00	No	Yes	—	4-85
Meter adjustment	C105	MP gain setting	50. to 200.	100.	Yes	Yes	%	4-107
	C106	AM gain setting	50. to 200.	100.	Yes	Yes	%	4-108
	C107	AMI gain setting	50. to 200.	100.	Yes	Yes	%	
	C109	AM bias setting	0. to 100.	0.	Yes	Yes	%	
	C110	AMI bias setting	0. to 100.	20.	Yes	Yes	%	
Terminal	C111	Overload warning level 2	0.0 to 2.00 × Rated current (0.4 to 55 kW) 0.0 to 1.80 × Rated current (75 to 132 kW)	Rated current	Yes	Yes	A	4-49
Adjustment	C121	FV zero adjustment	0. to 9999. 1000 to 6553 (10000 to 65530)	Factory default	Yes	Yes	—	—
	C122	FI zero adjustment	0. to 9999. 1000 to 6553 (10000 to 65530)	Factory default	Yes	Yes	—	
	C123	FE zero adjustment	0. to 9999. 1000 to 6553 (10000 to 65530)	Factory default	Yes	Yes	—	

* 2nd/3rd control is displayed when "SET(08)/SET3(17)" is allocated to one of multi-function inputs from C001 to C008.

	Parameter No.	Function name	Monitor or data range	Default setting	Changes during operation		Unit	Page
					Normal	b031 = 10		
Output terminal operation function	C130	Output P1 ON delay	0.0 to 100.0	0.0	No	Yes	s	4-105
	C131	Output P1 OFF delay	0.0 to 100.0	0.0				
	C132	Output P2 ON delay	0.0 to 100.0	0.0				
	C133	Output P2 OFF delay	0.0 to 100.0	0.0				
	C134	Output P3 ON delay	0.0 to 100.0	0.0				
	C135	Output P3 OFF delay	0.0 to 100.0	0.0				
	C136	Output P4 ON delay	0.0 to 100.0	0.0				
	C137	Output P4 OFF delay	0.0 to 100.0	0.0				
	C138	Output P5 ON delay	0.0 to 100.0	0.0				
	C139	Output P5 OFF delay	0.0 to 100.0	0.0				
	C140	Relay output ON delay	0.0 to 100.0	0.0				
	C141	Relay output OFF delay	0.0 to 100.0	0.0				
	C142	Logic output signal 1 selection 1	Same as options for C021 to C026 (excluding LOG1 to LOG6)	00	No	Yes	—	4-99
	C143	Logic output signal 1 selection 2	Same as options for C021 to C026 (excluding LOG1 to LOG6)	00				
	C144	Logic output signal 1 operator selection	00: AND 01: OR 02: XOR	00				
	C145	Logic output signal 2 selection 1	Same as options for C021 to C026 (excluding LOG1 to LOG6)	00				
	C146	Logic output signal 2 selection 2	Same as options for C021 to C026 (excluding LOG1 to LOG6)	00				
	C147	Logic output signal 2 operator selection	00: AND 01: OR 02: XOR	00				
	C148	Logic output signal 3 selection 1	Same as options for C021 to C026 (excluding LOG1 to LOG6)	00				
	C149	Logic output signal 3 selection 2	Same as options for C021 to C026 (excluding LOG1 to LOG6)	00				
	C150	Logic output signal 3 operator selection	00: AND 01: OR 02: XOR	00				
	C151	Logic output signal 4 selection 1	Same as options for C021 to C026 (excluding LOG1 to LOG6)	00				

* 2nd/3rd control is displayed when "SET(08)/SET3(17)" is allocated to one of multi-function inputs from C001 to C008.

Parameter No.		Function name	Monitor or data range	Default setting	Changes during operation		Unit	Page
					Normal	b031 = 10		
Output terminal operation function	C152	Logic output signal 4 selection 2	Same as options for C021 to C026 (excluding LOG1 to LOG6)	00	No	Yes	—	4-99
	C153	Logic output signal 4 operator selection	00: AND 01: OR 02: XOR	00				
	C154	Logic output signal 5 selection 1	Same as options for C021 to C026 (excluding LOG1 to LOG6)	00				
	C155	Logic output signal 5 selection 2	Same as options for C021 to C026 (excluding LOG1 to LOG6)	00				
	C156	Logic output signal 5 operator selection	00: AND 01: OR 02: XOR	00				
	C157	Logic output signal 6 selection 1	Same as options for C021 to C026 (excluding LOG1 to LOG6)	00				
	C158	Logic output signal 6 selection 2	Same as options for C021 to C026 (excluding LOG1 to LOG6)	00				
	C159	Logic output signal 6 operator selection	00: AND 01: OR 02: XOR	00				
Input terminal response	C160	Input terminal response time 1	0. to 200. (× 2 ms)	1	No	Yes	ms	4-105
	C161	Input terminal response time 2	0. to 200. (× 2 ms)	1				
	C162	Input terminal response time 3	0. to 200. (× 2 ms)	1				
	C163	Input terminal response time 4	0. to 200. (× 2 ms)	1				
	C164	Input terminal response time 5	0. to 200. (× 2 ms)	1				
	C165	Input terminal response time 6	0. to 200. (× 2 ms)	1				
	C166	Input terminal response time 7	0. to 200. (× 2 ms)	1				
	C167	Input terminal response time 8	0. to 200. (× 2 ms)	1				
	C168	FW terminal response time	0. to 200. (× 2 ms)	1				
Others	C169	Multi-step speed/ position determination time	0. to 200. (× 10 ms)	0	No	Yes	ms	4-16 4-132

* 2nd/3rd control is displayed when "SET(08)/SET3(17)" is allocated to one of multi-function inputs from C001 to C008.

Parameter No.		Function name	Monitor or data range	Default setting	Changes during operation		Unit	Page
					Normal	b031 = 10		
Control parameter	H001	Auto-tuning selection	00: Disabled 01: Not rotate 02: Rotate	00	No	No	—	4-109
	H002	Motor parameter selection	00: Standard motor parameter 01: Auto-tuning parameter 02: Auto-tuning parameter (online auto-tuning enabled)	00	No	No	—	4-109 4-111 4-112
	H202	* 2nd motor parameter selection		00				
	H003	Motor capacity selection	0.20 to 160.0	Factory default	No	No	kW	4-19 4-109 4-112 4-116
	H203	* 2nd motor capacity selection		Factory default				
	H004	Motor pole number selection	2/4/6/8/10	4	No	No	Pole	
	H204	* 2nd motor pole number selection		4				
	H005	Speed response	0.001 to 9.999/10.00 to 80.00 (10.000 to 80.000)	1.590	Yes	Yes	—	4-87 4-89
	H205	* 2nd speed response		1.590				

* 2nd/3rd control is displayed when "SET(08)/SET3(17)" is allocated to one of multi-function inputs from C001 to C008.

Parameter No.		Function name	Monitor or data range	Default setting	Changes during operation		Unit	Page
					Normal	b031 = 10		
Control parameter	H006	Stabilization parameter	0. to 255.	100.	Yes	Yes	—	4-117
	H206	* 2nd stabilization parameter		100.				
	H306	* 3rd stabilization parameter		100.				
	H020	Motor parameter R1	0.001 to 9.999 10.00 to 65.53	Depends on the motor capacity.	No	No	Ω	4-112
	H220	* 2nd motor parameter R1		Depends on the motor capacity.				
	H021	Motor parameter R2	0.001 to 9.999 10.00 to 65.53	Depends on the motor capacity.	No	No	Ω	
	H221	* 2nd motor parameter R2		Depends on the motor capacity.				
	H022	Motor parameter L	0.01 to 99.99 100.0 to 655.3	Depends on the motor capacity.	No	No	mH	
	H222	* 2nd motor parameter L		Depends on the motor capacity.				
	H023	Motor parameter Io	0.01 to 99.99 100.0 to 655.3	Depends on the motor capacity.	No	No	A	4-112
	H223	* 2nd motor parameter Io		Depends on the motor capacity.				
	H024	Motor parameter J	0.001 to 9.999 10.00 to 99.99 100.0 to 999.9 1000. to 9999.	Depends on the motor capacity.	No	No	kgm^2	
	H224	* 2nd motor parameter J		Depends on the motor capacity.				

* 2nd/3rd control is displayed when "SET(08)/SET3(17)" is allocated to one of multi-function inputs from C001 to C008.

	Parameter No.	Function name	Monitor or data range	Default setting	Changes during operation		Unit	Page
					Normal	b031 = 10		
Control parameter	H030	Motor parameter R1 (auto-tuning data)	0.001 to 9.999 10.00 to 65.53	Depends on the motor capacity.	No	No	Ω	4-109 4-112
	H230	* 2nd motor parameter R1 (auto-tuning data)		Depends on the motor capacity.				
	H031	Motor parameter R2 (auto-tuning data)	0.001 to 9.999 10.00 to 65.53	Depends on the motor capacity.	No	No	Ω	
	H231	* 2nd motor parameter R2 (auto-tuning data)		Depends on the motor capacity.				
	H032	Motor parameter L (auto-tuning data)	0.01 to 99.99 100.0 to 655.3	Depends on the motor capacity.	No	No	mH	
	H232	* 2nd motor parameter L (auto-tuning data)		Depends on the motor capacity.				
	H033	Motor parameter Io (auto-tuning data)	0.01 to 99.99 100.0 to 655.3	Depends on the motor capacity.	No	No	A	
	H233	* 2nd motor parameter Io (auto-tuning data)		Depends on the motor capacity.				
	H034	Motor parameter J (auto-tuning data)	0.001 to 9.999 10.00 to 99.99 100.0 to 999.9 1000. to 9999.	Depends on the motor capacity.	No	No	kgm^2	
	H234	* 2nd motor parameter J (auto-tuning data)		Depends on the motor capacity.				

* 2nd/3rd control is displayed when "SET(08)/SET3(17)" is allocated to one of multi-function inputs from C001 to C008.

Parameter No.		Function name	Monitor or data range	Default setting	Changes during operation		Unit	Page
					Normal	b031 = 10		
Control parameter	H050	PI proportional gain	0.0 to 999.9 1000.	100.0	Yes	Yes	—	4-87 4-89
	H250	* 2nd PI proportional gain		100.0				
	H051	PI integral gain	0.0 to 999.9 1000.	100.0	Yes	Yes	—	
	H251	*2nd PI integral gain		100.0				
	H052	P proportional gain	0.01 to 10.00	1.00	Yes	Yes	—	
	H252	*2nd P proportional gain		1.00				
	H060	Limit at 0 Hz	0.0 to 100.0	100.0	Yes	Yes	%	4-114
	H260	* 2nd limit at 0 Hz		100.0				
	H061	Boost amount at SLV startup, 0 Hz	0. to 50.	50.	Yes	Yes	%	
	H261	* 2nd boost amount at SLV startup, 0 Hz		50.				
	H070	For PI proportional gain switching	0.0 to 999.9 1000.	100.0	Yes	Yes	—	4-87
	H071	For PI integral gain switching	0.0 to 999.9 1000.	100.0	Yes	Yes	—	
	H072	For P proportional gain switching	0.00 to 10.00	1.00	Yes	Yes	—	
	H073	Gain switching time	0. to 9999.	100.	Yes	Yes	ms	

* 2nd/3rd control is displayed when "SET(08)/SET3(17)" is allocated to one of multi-function inputs from C001 to C008.

Parameter No.		Function name	Monitor or data range	Default setting	Changes during operation		Unit	Page
					Normal	b031 = 10		
Options	P001	Operation selection at option 1 error	00: Trip 01: Continues operation	00	No	Yes	—	4-108
	P002	Operation selection at option 2 error	00: Trip 01: Continues operation	00	No	Yes	—	
	P011	Encoder pulses	128. to 9999. 1000 to 6553 (10000 to 65535)	1024.	No	No	Pulse	4-119 4-128 4-129
	P012	V2 control mode selection	00: ASR (speed control mode) 01: APR (pulse train position control mode) 02: APR2 (absolute position control mode) 03: HAPR (High resolution absolute position control mode)	00	No	No	—	4-119 4-131
	P013	Pulse train mode selection	00: Mode 0 01: Mode 1 02: Mode 2	00	No	No	—	4-122
	P014	Orientation stop position	0. to 4095.	0.	No	Yes	—	4-129
	P015	Orientation speed setting	Starting frequency to Max. frequency (upper limit: 120.0)	5.00	No	Yes	Hz	
	P016	Orientation direction setting	00: Forward side 01: Reverse side	00	No	No	—	

* 2nd/3rd control is displayed when "SET(08)/SET3(17)" is allocated to one of multi-function inputs from C001 to C008.

Parameter No.		Function name	Monitor or data range	Default setting	Changes during operation		Unit	Page
					Normal	b031 = 10		
Options	P017	Position ready range setting	0. to 9999. 1000(10000)	5.	No	Yes	Pulse	4-122 4-129
	P018	Position ready delay time setting	0.00 to 9.99	0.00	No	Yes	s	4-122 4-129
	P019	Electronic gear setting position selection	00: Position feedback side (FB) 01: Position command side (REF)	00	No	Yes	—	4-123 4-124
	P020	Electronic gear ratio numerator	0. to 9999.	1.	Yes	Yes	—	
	P021	Electronic gear ratio denominator	0. to 9999.	1.	Yes	Yes	—	
	P022	Position control feedforward gain	0.00 to 99.99 100.0 to 655.3	0.00	Yes	Yes	—	
	P023	Position loop gain	0.00 to 99.99 100.0	0.50	Yes	Yes	rad/s	4-119 4-123 4-124 4-129 4-131
	P024	Position bias amount	-204(-2048.)/-999. to 2048.	0.	Yes	Yes	—	4-123
	P025	Secondary resistance compensation enable/ disable selection	00: Disabled 01: Enabled	00	No	Yes	—	4-111
	P026	Overspeed error detection level	0.0 to 150.0	135.0	No	Yes	%	5-6
	P027	Speed deviation error detection level	0.00 to 99.99 100.0 to 120.0	7.50	No	Yes	Hz	4-119
	P028	Motor gear ratio numerator	1. to 9999.	1.	No	Yes	—	4-128
	P029	Motor gear ratio denominator	1. to 9999.	1.	No	Yes	—	
	P031	Acceleration/ deceleration time input type	00: Digital Operator 01: Option 1 02: Option 2	00	No	No	—	4-9
	P032	Orientation stop position input type	00: Digital Operator 01: Option 1 02: Option 2	00	No	Yes	—	—
	P033	Torque reference input selection	00: Terminal FV 01: Terminal FI 02: Terminal FE 03: Digital Operator	00	No	No	—	4-121
	P034	Torque reference setting	0. to 200. (0.4 to 55 kW) 0. to 180. (75 to 132 kW)	0.	Yes	Yes	%	
	P035	Polarity selection at torque reference via FE	00: Signed 01: Depends on the RUN direction	00	No	No	—	

* 2nd/3rd control is displayed when "SET(08)/SET3(17)" is allocated to one of multi-function inputs from C001 to C008.

Parameter No.		Function name	Monitor or data range	Default setting	Changes during operation		Unit	Page
					Normal	b031 = 10		
Options	P036	Torque bias mode	00: None 01: Digital Operator 02: Terminal FE	00	No	No	—	4-121 4-122
	P037	Torque bias value	-200. to +200. (0.4 to 55 kW) -180. to +180. (75 to 132 kW)	0.	Yes	Yes	%	
	P038	Torque bias polarity selection	00: Signed 01: Depends on the RUN direction	00	No	No	—	
	P039	Speed limit value in torque control (forward)	0.00 to Maximum frequency	0.00	Yes	Yes	Hz	4-121
	P040	Speed limit value in torque control (reverse)	0.00 to Maximum frequency	0.00	Yes	Yes	Hz	
	P044	Not used	Use "1.00". *Do not change.	1.00	No	No	s	—
	P045	Operation setting at communications error	00: Trip 01: Trip after deceleration stop 02: Ignore 03: Free run 04: Deceleration stop	01	No	No	—	—
	P046	Output assembly instance No. setting	20 21 100	21	No	No	—	—
	P047	Input assembly instance No. setting	70 71 101	71	No	No	—	—
	P048	Operation setting at idle mode detection	00: Trip 01: Trip after deceleration stop 02: Ignore 03: Free run 04: Deceleration stop	01	No	No	—	—
	P049	Polarity setting for rotation speed	0/2/4/6/8/10/12/14/16/18/20/22/24/26/28/30/32/34/36/38	0	No	No	—	—
	P055	Pulse train frequency scale	1.0 to 50.0	25.0	No	Yes	kHz	4-138
	P056	Pulse train frequency filter time constant	0.01 to 2.00	0.10	No	Yes	s	
	P057	Pulse train frequency bias amount	-100. to +100.	0.	No	Yes	%	
	P058	Pulse train frequency limit	0. to 100.	100.	No	Yes	%	

* 2nd/3rd control is displayed when "SET(08)/SET3(17)" is allocated to one of multi-function inputs from C001 to C008.

Parameter No.		Function name	Monitor or data range	Default setting	Changes during operation		Unit	Page
					Normal	b031 = 10		
Absolute position control	P060	Multi-step position command 0	Position range specification (reverse side) to Position range specification (forward side)(Displays MSB 4 digits including "-")	0	Yes	Yes	—	4-131
	P061	Multi-step position command 1	Position range specification (reverse side) to Position range specification (forward side)(Displays MSB 4 digits including "-")	0				
	P062	Multi-step position command 2	Position range specification (reverse side) to Position range specification (forward side)(Displays MSB 4 digits including "-")	0				
	P063	Multi-step position command 3	Position range specification (reverse side) to Position range specification (forward side)(Displays MSB 4 digits including "-")	0				
	P064	Multi-step position command 4	Position range specification (reverse side) to Position range specification (forward side)(Displays MSB 4 digits including "-")	0				
	P065	Multi-step position command 5	Position range specification (reverse side) to Position range specification (forward side)(Displays MSB 4 digits including "-")	0				
	P066	Multi-step position command 6	Position range specification (reverse side) to Position range specification (forward side)(Displays MSB 4 digits including "-")	0				
	P067	Multi-step position command 7	Position range specification (reverse side) to Position range specification (forward side)(Displays MSB 4 digits including "-")	0				
	P068	Zero return mode	00: Low 01: Hi1 02: Hi2	00	Yes	Yes	—	
	P069	Zero return direction selection	00: Forward side 01: Reverse side	00	Yes	Yes	—	

* 2nd/3rd control is displayed when "SET(08)/SET3(17)" is allocated to one of multi-function inputs from C001 to C008.

Parameter No.		Function name	Monitor or data range	Default setting	Changes during operation		Unit	Page
					Normal	b031 = 10		
Absolute position control	P070	Low-speed zero return frequency	0.00 to 10.00	0.00	Yes	Yes	Hz	4-131
	P071	High-speed zero return frequency	0.00 to 99.99 100.0 to Maximum frequency	0.00	Yes	Yes	Hz	
	P072	Position range specification (forward)	0 to 268435455 (at P012 = 02) 0 to 1073741823 (at P012 = 03) (Displays MSB 4 digits)	268435455	Yes	Yes	—	
	P073	Position range specification (reverse)	-268435455 to 0 (at P012 = 02) -1073741823 to 0 (at P012 = 03) (Displays MSB 4 digits including "-")	-268435455	Yes	Yes	—	4-132
	P074	Teaching selection	00: Multi-step position command 0 (P060) 01: Multi-step position command 1 (P061) 02: Multi-step position command 2 (P062) 03: Multi-step position command 3 (P063) 04: Multi-step position command 4 (P064) 05: Multi-step position command 5 (P065) 06: Multi-step position command 6 (P066) 07: Multi-step position command 7 (P067)	00	Yes	Yes	—	
P100 to P131		Not used	Do not use.	0.	—	—	—	—
User parameter	U001	User 1 selection	no/d001 to P074	no	Yes	Yes	—	4-53
	U002	User 2 selection	no/d001 to P074	no				
	U003	User 3 selection	no/d001 to P074	no				
	U004	User 4 selection	no/d001 to P074	no				
	U005	User 5 selection	no/d001 to P074	no				
	U006	User 6 selection	no/d001 to P074	no				
	U007	User 7 selection	no/d001 to P074	no				
	U008	User 8 selection	no/d001 to P074	no				
	U009	User 9 selection	no/d001 to P074	no				
	U010	User 10 selection	no/d001 to P074	no				
	U011	User 11 selection	no/d001 to P074	no				
	U012	User 12 selection	no/d001 to P074	no				

* 2nd/3rd control is displayed when "SET(08)/SET3(17)" is allocated to one of multi-function inputs from C001 to C008.

Chapter 4

Functions

4-1 Monitor Mode 4-1
4-2 Function Mode 4-8
4-3 Functions When Option PG Board (3G3AX-PG01) Is Used 4-118
4-4 Communication Function 4-139

4-1 Monitor Mode

Output Frequency Monitor [d001]

Displays the output frequency of the Inverter. During stop, "0.00" is displayed.
The data LED indicator "Hz" lights up while the d001 setting is displayed.

(Display)
0.00 to 99.99 : Displays in increments of 0.01 Hz.
100.0 to 400.0 : Displays in increments of 0.1 Hz.

Note: When the frequency reference is set using the Digital Operator, the output frequency can be changed with the Increment/Decrement key during operation only.
The frequency setting changed with this monitor will be reflected in frequency reference F001.
Pressing the Enter key overwrites the currently selected frequency reference.

Output Current Monitor [d002]

Displays the output current value of the Inverter. During stop, "0.00" is displayed.
The data LED indicator "A" lights up while the d002 setting is displayed.

(Display)
0.0 to 999.9: Displays in increments of 0.1 A.

Rotation Direction Monitor [d003]

Displays the RUN direction of the Inverter.
The RUN LED indicator lights up during forward/reverse rotation.

(Display)
F : Forward
o : Stop
r : Reverse

PID Feedback Value Monitor [d004]

When "Enabled" (01) or "Reverse output enabled" (02) is selected in PID selection A071, the PID feedback value can be monitored.
Gain conversion is enabled with PID scale A075.

"d004 display" = "PID feedback value (%)" × "PID scale (A075)"
(A075): 0.01 to 99.99 (Can be set in increments of 0.01.)

(Display)
0.00 to 99.99 : Displays in increments of 0.01.
100.0 to 999.9 : Displays in increments of 0.1.
1000 to 9999 : Displays in increments of 1.
⌈100 to ⌈999 : Displays in increments of 10.

Multi-function Input Monitor [d005]

- The LED lighting position indicates the input status of the multi-function input terminals.
- The item that the built-in CPU recognizes to be "significant" is indicated as being ON. This does not depend on the NO/NC contact setting.

(Example)
FW, Multi-function input terminals S7, S2, S1: ON
Multi-function input terminals S8, S6, S5, S4, S3: OFF

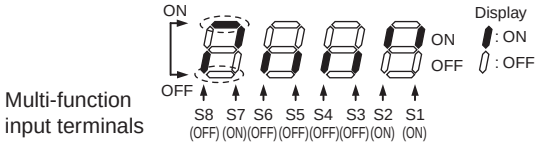

Multi-function Output Monitor [d006]

- The LED lighting position indicates the output status of the multi-function output terminals.
- This monitor displays the output status of the built-in CPU, not the control circuit terminal status.

(Example)
Multi-function output terminals P2, P1: ON
Relay output terminal MA, Multi-function output terminals P5, P4, P3: OFF

Output Frequency Monitor (After Conversion) [d007]

Displays a gain conversion value based on the coefficient set in frequency conversion coefficient b086.
This monitor is used to change the unit of displayed data (e.g. motor rpm).

"d007 display" = "Output frequency (d001)" × "Frequency conversion coefficient (b086)"
(b086) 0.1 to 99.9 (Can be set in increments of 0.1.)

(Example)
To display 4-pole motor rpm:
Motor rpm N (min^{-1}) = (120 × f (Hz)) / P (pole)
= f (Hz) × 30
As such, when b086 = 30.0, a motor rpm of 1800 (60 × 30.0) is displayed.

(Display)
0.00 to 99.99 : Displays in increments of 0.01.
100.0 to 999.9 : Displays in increments of 0.1.
100. to 9999. : Displays in increments of 1.
1000 to 3996 : Displays in increments of 10.

Note: When the frequency reference is set using the Digital Operator, the output frequency can be changed with the Increment/Decrement key during operation only.
The frequency setting changed with this monitor will be reflected in frequency reference F001. Pressing the Enter key overwrites the currently selected frequency reference. (The data storage accuracy depends on each frequency reference.)

Real Frequency Monitor [d008]

When a motor with an encoder is connected to a load, and the PG board (3G3AX-PG01) is used, this monitor displays the real frequency of the motor (regardless of the control method).

(Display)
In forward rotation: 0.00 to 99.99 : Displays in increments of 0.01 Hz.
100.0 to 400.0 : Displays in increments of 0.1 Hz.
In reverse rotation: -0.0 to -99.9 : Displays in increments of 0.1 Hz.
-100 to -400 : Displays in increments of 1 Hz.

Note 1: To use this monitor, set the number of encoder pulses (P011) and the motor pole number selection (H004 or H204) correctly.
Note 2: The monitored value does not depend on V/f characteristics selection A044.

Torque Reference Monitor [d009]

When torque control is selected for sensor vector control, this monitor displays the currently entered torque reference value.
The data LED indicator "%" lights up while the d009 setting is displayed.

(Display)
0. to 200.: Displays in increments of 1%.

Torque Bias Monitor [d010]

When sensor vector control is selected, this monitor displays the torque bias amount currently set in display code d010.
The data LED indicator "%" lights up while the d010 setting is displayed.

(Display)
-150. to +150.: Displays in increments of 1%.

Output Torque Monitor [d012]

Displays an estimated value of the Inverter's output torque.
The data LED indicator "%" lights up while the d012 setting is displayed.

(Display)
-300. to +300.: Displays in increments of 1%.

Note: This monitor is enabled only when "sensorless vector control", "0-Hz sensorless vector control" , or "sensor vector control" is selected as the control mode.

Output Voltage Monitor [d013]

Displays the output voltage of the Inverter.
The data LED indicator "V" lights up while the d013 setting is displayed.

(Display)
0.0 to 600.0: Displays in increments of 0.1 V.

Input Power Monitor [d014]

Displays the input power (instantaneous value) of the Inverter.
The data LED indicator "kW" ("V" and "A") lights up while the d014 setting is displayed.

(Display)
0.0 to 999.9: Displays in increments of 0.1 kW.

Integrated Power Monitor [d015]

- Displays the integrated power (integrated value of input power) of the Inverter.
  The gain conversion of displayed data is performed with integrated power display gain b079.

"d015 display" = "Input power calculation value (kWh)" / "Integrated power display gain (b079)"
(b079) 1. to 1000. (Can be set in increments of 1.)

- When integrated power clear d078 is set to "01", pressing the Enter key clears the integrated power value.
- The integrated power value can also be cleared via terminal input, if "53" (KHC: Integrated power clear) is allocated to any of the multi-function input terminals.
- When b079 is set to "1000", up to "999000" (kWh) can be displayed.

(Display)
0. to 9999. : Displays in increments of 1 kWh/(b079) set value.
1000 to 9999 : Displays in increments of 10 kWh/(b079) set value.
⌈100 to ⌈999 : Displays in increments of 1000 kWh/(b079) set value.

Total RUN Time [d016]

Displays the total RUN time of the Inverter.

(Display)
0. to 9999. : Displays in increments of 1 hour.
1000 to 9999 : Displays in increments of 10 hours.
⌈100 to ⌈999 : Displays in increments of 1000 hours.

Power ON Time Monitor [d017]

Displays the total power ON time of the Inverter.

(Display)
0. to 9999. : Displays in increments of 1 hour.
1000 to 9999 : Displays in increments of 10 hours.
100 to ⌈999 : Displays in increments of 1000 hours.

Fin Temperature Monitor [d018]

Displays the temperature of the fin inside the Inverter.

(Display)
-020. to 200.0: Displays in increments of 0.1°C.

Motor Temperature Monitor [d019]

- Displays the temperature of the thermistor connected between the control circuit terminals TH and SC.
- Use thermistor PB-41E (SHIBAURA ELECTRONICS).
- Set thermistor selection b098 to "02" (NTC enabled).

(Display)
0.0 to 200.0: Displays in increments of 0.1°C.

Note: When b098 = "01" (PTC enabled), the motor temperature monitor is disabled.

Life Assessment Monitor [d022]

- The LED lighting position indicates a life assessment result.
  The following two items can be monitored:
  1: Main circuit board capacitor service life
  2: Cooling fan rpm reduction

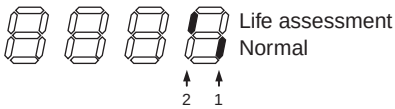

Note 1: The capacitor service life is calculated every 10 minutes. If the Inverter is turned on/off frequently within this interval, the capacitor service life cannot be correctly diagnosed.
Note 2: While the cooling fan is stopped with b092 set to "01", the cooling fan rpm is judged as being normal.

Pulse Counter Monitor [d028]

You can monitor a total pulse count of multi-function input function pulse counter 74 (PCNT).

Position Command Monitor (Absolute Position Control Mode) [d029]

You can monitor a position command in absolute position control mode.

Note: This monitor is enabled only when V2 control mode selection P012 is set to "02" or "03" in sensor vector control mode.

Current Position Monitor (Absolute Position Control Mode) [d030]

You can monitor the current position in absolute position control mode.

Note: This monitor is enabled only when V2 control mode selection P012 is set to "02" or "03" in sensor vector control mode.

Fault Frequency Monitor [d080]

Displays the number of times the Inverter has tripped.

(Display)
0. to 9999. : Displays in increments of 1 time.
1000 to 6553 : Displays in increments of 10 times.

Fault Monitors 1 to 6 [d081] to [d086]

Displays the details of the last six trips.
The most recent trip is displayed on trip monitor 1.

(Display)
(1) Factor (Displays any of E01 to E79.)*
(2) Output frequency (Hz) at the time of tripping
(3) Output current (A) at the time of tripping
(4) Main circuit DC voltage (V) at the time of tripping
(5) Total RUN time (h) before the trip
(6) Total power ON time (h) before the trip

* Refer to "Error Code List" (page 5-1).

(Trip Monitor Display Sequence)

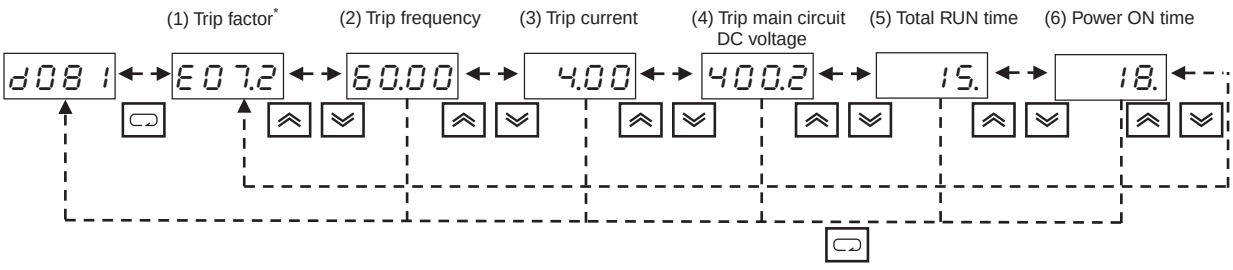

* Displays [_ _ _ _] if there has been no trip.

Warning Monitor [d090]

- If the set data is inconsistent with other data, a warning code is displayed.
- While this warning remains in effect, the PROGRAM LED indicator (PRG) stays lit until forced to rewrite or correct the data.
- For details on the Warning display, refer to "5-2 Warning Function".

DC Voltage Monitor [d102]

- Displays the DC voltage (between P and N) of the Inverter.
- During operation, the monitor value changes depending on the actual DC voltage of the Inverter.

(Display)
0.0 to 999.9: Displays in increments of 0.1 V.

Regenerative Braking Load Rate Monitor [d103]

Displays a regenerative braking load rate. When the monitor value comes close to exceeding the value set in usage rate of the regenerative braking function b090, "E06 (Braking resistor overload protection)" works to trip the Inverter.

(Display)
0.0 to 100.0: Displays in increments of 0.1%.

Electronic Thermal Monitor [d104]

Displays an electronic thermal load rate. When the monitor value comes close to exceeding 100%, "E05 (Overload protection)" works to trip the Inverter.

(Display)
0.0 to 100.0: Displays in increments of 0.1%.

4-2 Function Mode

<Group F: Basic Function Parameters>

Output Frequency Setting/Monitor

- Set the Inverter output frequency.
- With frequency reference selection A001 set to 02, you can set the output frequency with F001. For other methods, refer to the [A001] section in "Frequency Reference Selection" (page 4-10). (If A001 is set other than to "02", F001 functions as the frequency reference monitor.)
- If a frequency is set in F001, the same value is automatically set in multi-step speed reference 0 (A020). To set the 2nd/3rd control, use the 2nd multi-step speed reference 0 (A220)/3rd multi-step speed reference 0 (A320) or use F001 with the SET/SET3 terminal turned on. To set using the SET/SET3 terminal, allocate 08 (SET)/17 (SET3) to the desired multi-function input.
- When this monitor is used to display a target value of the PID function, the monitor value is displayed as a percentage (%). (100% = Max. frequency)

Parameter No.	Function name	Data	Default setting	Unit
F001	Output frequency setting/monitor	0.0/Starting frequency to 1st/2nd/3rd max. frequency	—	Hz
A020	Multi-step speed reference 0		6.0	
A220	*2nd multi-step speed reference 0			
A320	*3rd multi-step speed reference 0			
Related functions		A001, A020, A220, A320, C001 to C008		

* To switch to the 2nd/3rd control, allocate 08 (SET)/17 (SET3) to the desired multi-function input and then turn it on.

Acceleration/Deceleration Time

- Set an acceleration/deceleration time for the motor. For a slow transition, set to a large value, and for a fast transition, set to a small one.

Parameter No.	Function name	Data	Default setting	Unit
F002	Acceleration time 1	0.01 to 3600	30.00	s
F202	*2nd acceleration time 1			
F302	*3rd acceleration time 1			
F003	Deceleration time 1			
F203	*2nd deceleration time 1			
F303	*3rd deceleration time 1			

Parameter No.	Function name	Data	Default setting	Unit
P031	Acceleration/deceleration time input type	00: Input via the Digital Operator 01: Input via option 1 02: Input via option 2	00	—
Related functions		A004, A204, A304, P031, C001 to C008		

* To switch to 2nd/3rd acceleration time 1 or 2nd/3rd deceleration time 1, allocate 08 (SET)/17 (SET3) to the desired multi-function input and then turn it on.

- The set time here indicates the acceleration/deceleration time from 0 Hz to the maximum frequency.

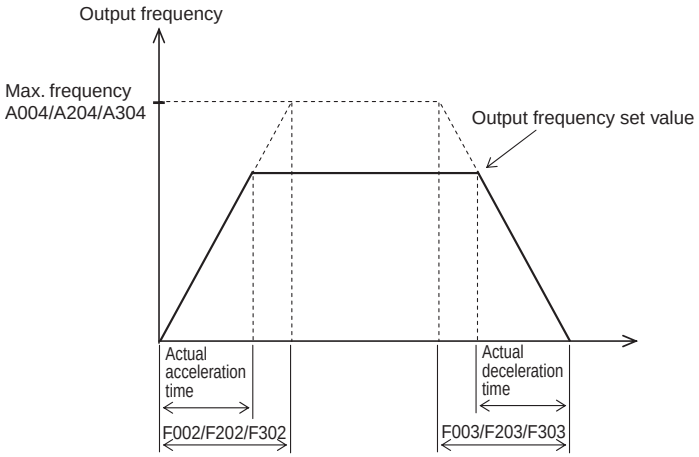

- When the LAD cancel (LAC) function is selected in the multi-function input selection and the signal is turned on, the acceleration/deceleration time is ignored, and the output frequency instantaneously follows the reference frequency.
- To switch between the 1st/2nd/3rd acceleration times or between the 1st/2nd/3rd deceleration times, allocate 08 (SET)/17 (SET3) to the desired multi-function input (refer to "Multi-function Input Selection" (page 4-77)), and use the SET/SET3.
- You can set the acceleration/deceleration time via (1) the Digital Operator, (2) optional board 1, or (3) optional board 2.
- Even if a short acceleration/deceleration time is set, the actual time cannot be shorter than the minimum acceleration/deceleration time that is determined by the mechanical inertia moment and the motor torque. If you set a time shorter than the minimum time, an overcurrent/overvoltage trip may occur.

Acceleration Time T_S

$$T_S = \frac{(J_L + J_M) \times N_M}{9.55 \times (T_S - T_L)}$$

Deceleration Time T_B

$$T_B = \frac{(J_L + J_M) \times N_M}{9.55 \times (T_B + T_L)}$$

J_L: Inertia moment of the load converted to the motor shaft [kg·m^2]
J_M: Inertia moment of the motor [kg·m^2]
N_M: Motor rotation speed [r/min]
T_S: Max. acceleration torque with the Inverter driving [N·m]
T_B: Max. deceleration torque with the Inverter driving [N·m]
T_L: Required driving torque [N·m]

For short-time deceleration, use a braking unit (optional).

Operator Rotation Direction Selection

- Select the rotation direction applied to the RUN command via the Digital Operator.
- This is disabled at terminals.

Parameter No.	Function name	Data	Default setting	Unit
F004	Operator rotation direction selection	00: Forward 01: Reverse	00	—

<Group A: Standard Function Parameters>

Frequency Reference Selection

Select the method for using the frequency reference.

Parameter No.	Function name	Data	Default setting	Unit
A001	Frequency reference selection	00: Digital Operator (FREQ adjuster) 01: Terminal 02: Digital Operator (F001) 03: ModBus communication 04: Option 1 05: Option 2 06: Pulse train frequency 07: Not used 10: Operation function result	02	—
Related functions		A005, A141 to A143, A145, A146		

Data	Frequency reference source
00	Set a frequency with the FREQ adjuster on the Digital Operator. (Enabled when 3G3AX-OP01 is used.)
01	Set a frequency via terminals. (FV-FC, FI-FC, FE-FC)
02	Set a frequency via the Digital Operator (F001).
03	Set a frequency through the ModBus communication.
04	Set a frequency via the PCB mounted to option port 1.
05	Set a frequency via the PCB mounted to option port 2.
06	Set a frequency as a pulse train by using 3G3AX-PG01.
07	Not used
10	The operation result of the frequency operation function is defined as a frequency reference.

RUN Command Selection

Select the method for using the RUN/STOP command.

Parameter No.	Function name	Data	Default setting	Unit
A002	RUN command selection	01: Terminal 02: Digital Operator (F001) 03: ModBus communication 04: Option 1 05: Option 2	02	—
Related functions		F004, C001 to C008, C019		

Data	RUN command source
01	Turn on/off the FW or RV allocated to terminals. The STOP command is activated if both Forward/Reverse commands are input simultaneously.
02	Use the STOP/RESET key on the Digital Operator.
03	Use the ModBus communication.
04	Use option board 1.
05	Use option board 2.

Base Frequency

- Match the Inverter output (frequency/voltage) to the motor rating. Be careful, especially if you set a base frequency below 50 Hz. Otherwise, the motor may burn out.

Parameter No.	Function name	Data	Default setting	Unit
A003	Base frequency	30 to Max. frequency [A004]	60.0	Hz
A203	*2nd base frequency	30 to 2nd max. frequency [A204]		
A303	*3rd base frequency	30 to 3rd max. frequency [A304]		
Related functions		A004, A204, A304, A081, A082		

* To switch to the 2nd/3rd control, allocate 08 (SET)/17 (SET3) to the desired multi-function input and then turn it on.

- For the base frequency and motor voltage selections, match the Inverter output (frequency/voltage) to the motor rating.

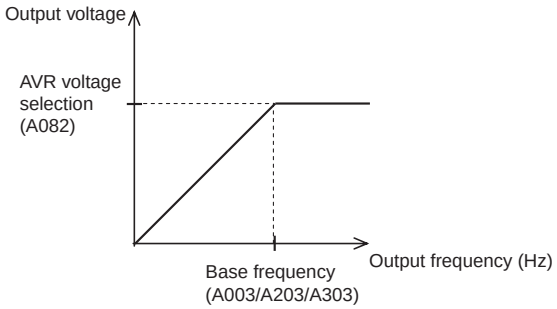

- If you apply a base frequency of over 60 Hz, a special motor is required. This may require the Inverter to increase its capacity to accommodate a different applicable motor.
- Set the motor voltage selection according to the motor specifications. If the voltage exceeds the specified level, the motor may burn out.

Maximum Frequency

- Set the maximum value of the output frequency.

- The value set here is the maximum value (e.g.,10 V in the range from 0 to 10 V) of the external analog input (frequency reference).
- The maximum Inverter output voltage from base to maximum frequencies is the voltage set in AVR voltage selection A082.
- The Inverter cannot output voltage beyond that of the incoming voltage.

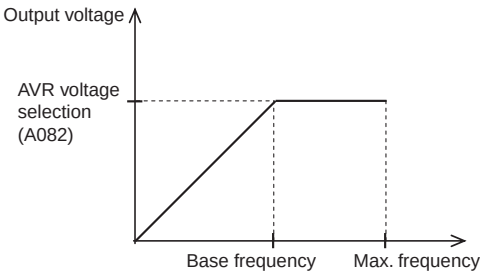

Parameter No.	Function name	Data	Default setting	Unit
A004	Maximum frequency	30 to 400	60.0	Hz
A204	*2nd maximum frequency			
A304	*3rd maximum frequency			
Related functions		A003, A203, A303, A081, A082		

* To switch to the 2nd/3rd control, allocate 08 (SET)/17 (SET3) to the desired multi-function input and then turn it on.

Analog Input (FV, FE, FI)

- The Inverter has three types of external analog input terminals.

  FV-FC terminal: 0 to 10 V (voltage input)
  FI-FC terminal: 4 to 20 mA (current input)
  FE-FC terminal: -10 to 10 V (voltage input)

- Below are the settings for this function.

Parameter No.	Function name	Data	Default setting	Unit
A005	FV/FI selection	00: Switches between FV/FI via terminal AT 01: Switches between FV/FE via terminal AT 02: Switches between FV/FREQ adjuster via terminal AT (Enabled only when 3G3AX-OP01 is used.) 03: Switches between FI/FREQ adjuster via terminal AT (Enabled only when 3G3AX-OP01 is used.) 04: Switches between FE/FREQ adjuster via terminal AT (Enabled only when 3G3AX-OP01 is used.)	00	—

Parameter No.	Function name	Data	Default setting	Unit
A006	FE selection	00: FE only 01: Auxiliary frequency reference of FV and FI (not reversible) 02: Auxiliary frequency reference of FV and FI (reversible) 03: FE disabled	03	—
Related functions		A005, A006, C001 to C008		

- The frequency reference and reversibility depend on whether "16" (AT) is allocated to a multi-function input, and depend on the combination of A005 and A006, as shown below.
  If the frequency reference is "reversible", the motor runs in the reverse direction when "main frequency reference + auxiliary frequency reference" is less than zero, even if the FW (Forward) terminal is ON. Also, note that the motor may run in the reverse direction, resulting in prolonged acceleration time or other phenomena, if the voltage fluctuates around 0 V even with the FE terminal not connected.

	A006	A005	AT terminal	Main frequency reference	Auxiliary frequency reference (FE-FC terminal)	Reversibility
With AT allocated to a multi-function input	00, 03	00	OFF	FV-FC terminal	Disabled	Not reversible
			ON	FI-FC terminal	Disabled	
		01	OFF	FV-FC terminal	Disabled	
			ON	FE-FC terminal	Disabled	Reversible
	01	00 (Example 1)	OFF	FV-FC terminal	Enabled	Not reversible
			ON	FI-FC terminal	Enabled	
		01	OFF	FV-FC terminal	Enabled	
			ON	FE-FC terminal	Disabled	Reversible
	02	00 (Example 2)	OFF	FV-FC terminal	Enabled	Reversible
			ON	FI-FC terminal	Enabled	
		01	OFF	FV-FC terminal	Enabled	
			ON	FE-FC terminal	Disabled	
With AT NOT allocated to a multi-function input	00	—	—	FE-FC terminal	Disabled	Reversible
	01	—	—	Addition of the FV-FC and FI-FC terminals	Enabled	Not reversible
	02	—	—	Addition of the FV-FC and FI-FC terminals	Enabled	Reversible
	03	—	—	Addition of the FV-FC and FI-FC terminals	Disabled	Not reversible

(Example 1) Not reversible

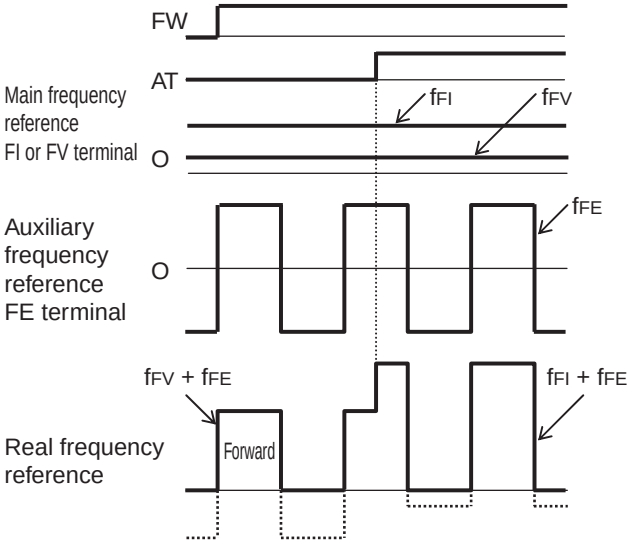

(Example 2) Reversible

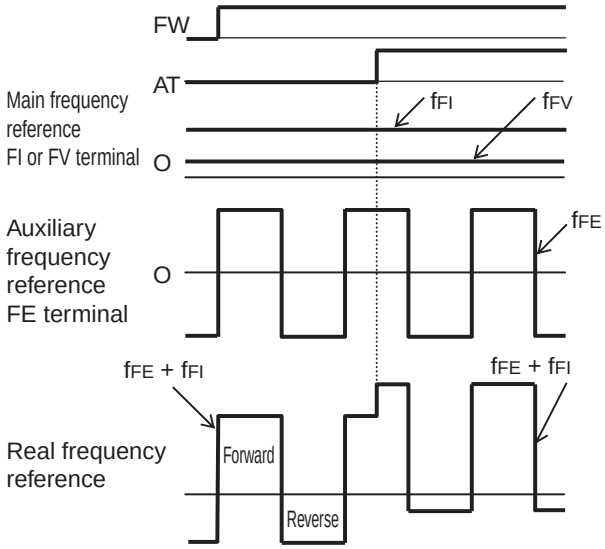

External Frequency (Voltage/Current) Adjustment

- External analog input (frequency reference)
  FV-FC terminal: 0 to 10 V (voltage input)
  FI-FC terminal: 4 to 20 mA (current input)
  FE-FC terminal: -10 to 10 V (voltage input)

Also set an output frequency for the FREQ adjuster on the Digital Operator.

■Adjusting the FE-FC and FI-FC Terminals

Parameter No.	Function name	Data	Default setting	Unit
A011 A101	FV/FI start frequency	0.00 to 400.0 (Set a start/end frequency.)	0.0	Hz
A012 A102	FV/FI end frequency			
A013 A103	FV/FI start ratio	0. to 100. (Set a start/end ratio relative to an external frequency reference of 0 to 10 V and 4 to 20 mA.)	0. 20.	%
A014 A104	FV/FI end ratio		100.	
A015 A105	FV/FI start selection	00: Start frequency (A011 set value) 01: 0 Hz	01 00	—
Related functions		A003, A203, A303, A081, A082		

- To input voltage ranging from 0 to 5 V on the FI-FC terminal, set A014 to 50%.

(Example 1) A015/A105: 00

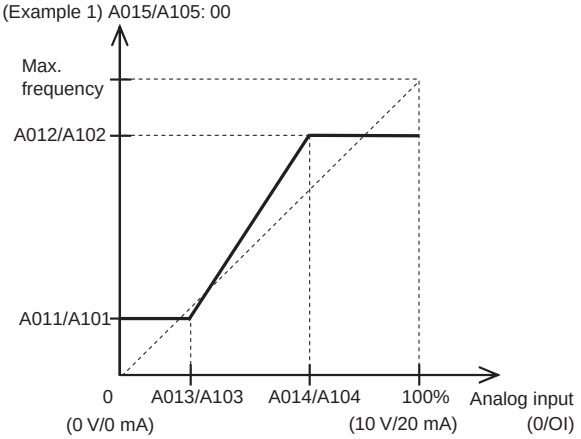

(Example 2) A015/A105: 01

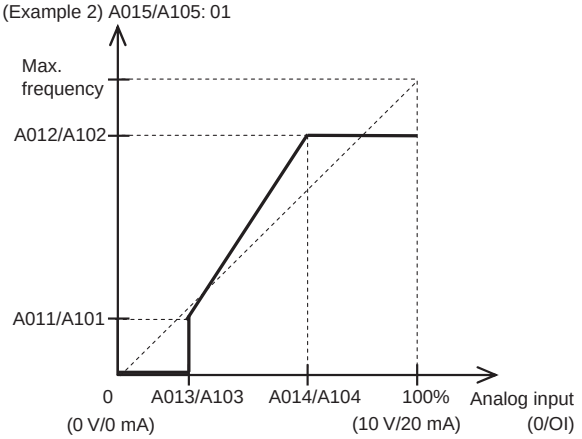

■Adjusting the FE-FC Terminal

Parameter No.	Function name	Data	Default setting	Unit
A111	FE start frequency	-400. to 400. (Set a start frequency.)	0.00	Hz
A112	FE end frequency	-400. to 400. (Set an end frequency.)	0.00	
A113	FE start ratio	-100. to 100.: (Set a start ratio relative to an external frequency reference of -10 to 10 V. *)	-100.	%
A114	FE end ratio	-100. to 100.: (Set an end ratio relative to an external frequency reference of -10 to 10 V. *)	100.	
Related functions		A003, A203, A303, A081, A082		

* Below is the ratio from -10 to 10 V.
  -10 to 0 V: -100% to 0%
  0 to 10 V: 0% to 100%
  • For example, to input voltage ranging from -5 to 5 V on the FE-FC terminal, set A113 to -50%, and A114 to 50%.

(Example 3)

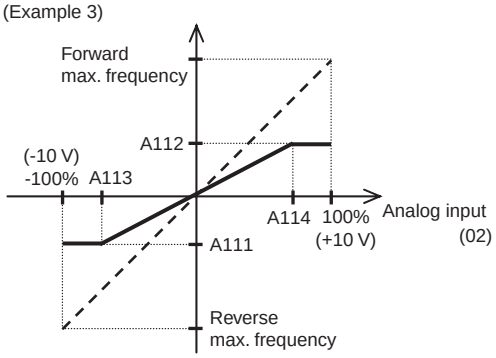

FV, FE, FI Sampling

•You can set the built-in filter applied to frequency setting signals of the external voltage/current input.

Parameter No.	Function name	Data	Default setting	Unit
A016	FV, FE, FI sampling	1. to 30./31.	31.	Time
Related functions		A011 to A016, C001 to C008		

•Helps remove noise in the frequency setting circuit.
•Set a larger data value if stable operation cannot be secured because of noise.
Note that the larger the data value is, the slower the response time. This parameter specifies a filter time constant for a set value of 1 to 30 (× 2 ms).
•When "31." is selected, a filter time constant of 500 ms and a hysteresis of ±0.1 Hz are set. (Factory default)

Multi-step Speed Operation Function

•You can set RUN speeds using codes and switch between the set speeds via the terminal.
•For multi-step speed operation, you can select either 4-terminal binary operation (with 16 steps max.) or 7-terminal bit operation (with 8 steps max.).

Parameter No.	Function name	Data	Default setting	Unit
A019	Multi-step speed selection	00: Binary: 16-step selection with 4 terminals 01: Bit: 8-step selection with 7 terminals	00	—
A020	Multi-step speed reference 0	0.0/Starting frequency to Max. frequency	6.0	Hz
A220	*2nd multi-step speed reference 0			
A320	*3rd multi-step speed reference 0			
A021	Multi-step speed reference 1		0.0	
A022	Multi-step speed reference 2			
A023	Multi-step speed reference 3			
A024	Multi-step speed reference 4			
A025	Multi-step speed reference 5			
A026	Multi-step speed reference 6			
A027	Multi-step speed reference 7			
A028 to A035	Multi-step speed references 8 to 15			

* To switch to the 2nd/3rd control, allocate 08 (SET)/17 (SET3) to the desired multi-function input and then turn it on.

•During multi-step speed operation, if frequency reference selection A001 is set to the terminal (01), and the external analog input (FV, FE, FI) setting mode based on a combination of FV/FI selection A005, FE selection A006, and the AT terminal is set to "reversible", the RUN command is inverted when "main frequency reference + auxiliary frequency reference" is less than zero.

■Binary Operation

- By allocating 02 to 05 (CF1 to CF4) to any of multi-function inputs 1 to 8 (C001 to C008), you can select from multi-step speeds 0 to 15.
- Use A021 to A035 (multi-step speeds 1 to 15) to set frequencies for speeds 1 to 15.
- When the Digital Operator is selected as the frequency reference, speed 0 is set with A020/A220/A320 or F001 (refer to page 4-8). When the control circuit terminal block is selected, speed 0 is set with terminals FV, FE, and FI.

Multi-step speeds	CF4	CF3	CF2	CF1
0th	OFF	OFF	OFF	OFF
1st				ON
2nd			OFF	OFF
3rd				ON
4th		ON	OFF	OFF
5th				ON
6th			OFF	OFF
7th				ON
8th	ON	OFF	OFF	OFF
9th				ON
10th			OFF	OFF
11th				ON
12th		OFF	OFF	OFF
13th				ON
14th			OFF	OFF
15th				ON

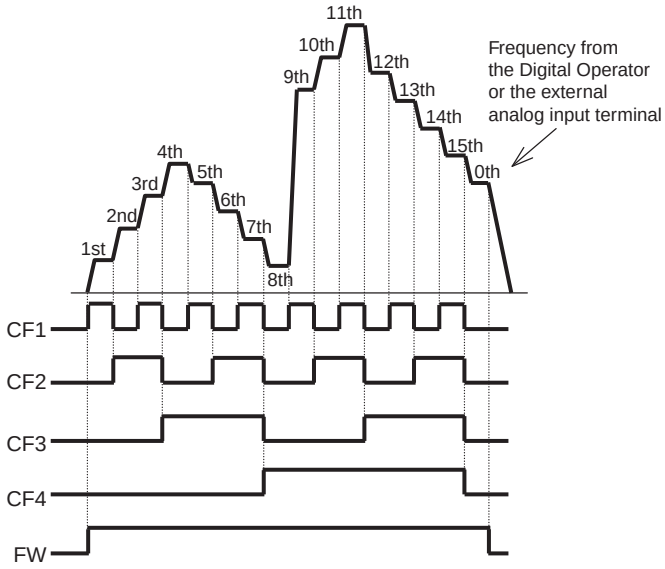

- For multi-step speed binary operation, you can set the wait time until which the terminal input is determined in multi-step speed/position determination time C169. This prevents the transition status before the input determination from being applied.
- If no input is made after the time set in C169, the data is determined.
  (Note that the longer the determination time, the slower the input response.)

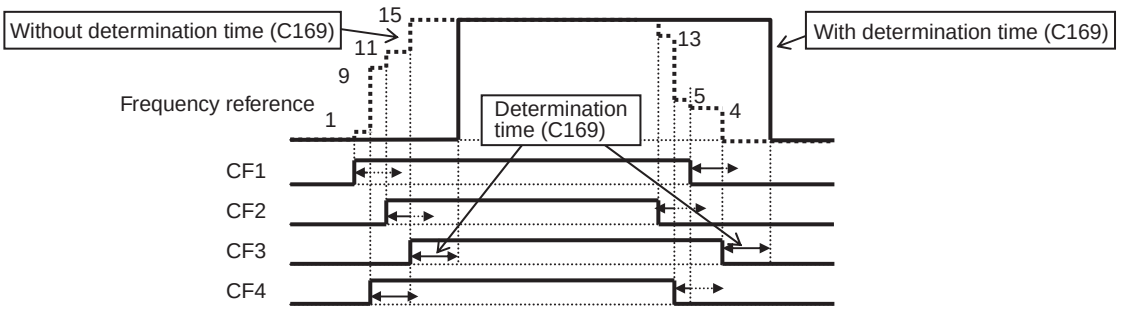

■Bit Operation

- By allocating 32 to 38 (SF1 to SF7) to any of multi-function inputs selection 1 to 8 (C001 to C008), you can select from multi-step speeds 0 to 7.
- For SF1 to SF7 frequency settings, set multi-step speeds 1 to 7 (A021 to A027).

Multi-step speeds	SF7	SF6	SF5	SF4	SF3	SF2	SF1
0th	OFF	OFF	OFF	OFF	OFF	OFF	OFF
1st	×	×	×	×	×	×	ON
2nd	×	×	×	×	×	ON	OFF
3rd	×	×	×	×	ON	OFF	OFF
4th	×	×	×	ON	OFF	OFF	OFF
5th	×	×	ON	OFF	OFF	OFF	OFF
6th	×	ON	OFF	OFF	OFF	OFF	OFF
7th	ON	OFF	OFF	OFF	OFF	OFF	OFF

- When several terminals are simultaneously turned on, priority is given to the terminal with the smallest number.
  The x mark in the above table indicates that speed is selected regardless of ON/OFF status.

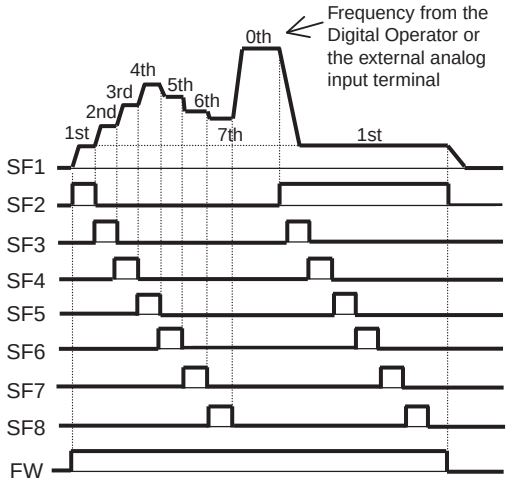

Jogging Operation Function

- The motor rotates while this function is turned on.

Parameter No.	Function name	Data	Default setting	Unit
A038	Jogging frequency	0.00/Starting frequency to 9.99	6.00	Hz
A039	Jogging stop selection	00: Free-run stop/Disabled in operation 01: Deceleration stop/Disabled in operation 02: DC injection braking stop/Disabled in operation* 03: Free-run stop/Enabled in operation 04: Deceleration stop/Enabled in operation 05: DC injection braking stop/Enabled in operation*	00	—

* When jogging stop selection A039 is set to "02" or "05", the DC injection braking settings are required. (Refer to page 4-24.)

- Allocate 06 (JG) to the desired multi-function input.

■Jogging Frequency

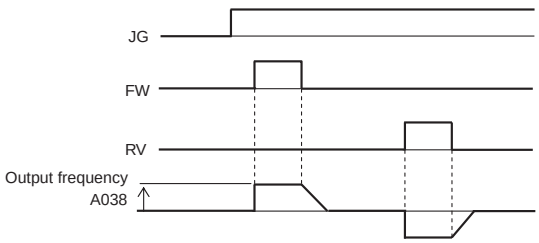

- Setting a high jogging frequency causes the Inverter to easily trip. Adjust the set value of jogging frequency A038 to prevent the Inverter from tripping.

■Jogging Stop Selection

Note: To perform the jogging operation, turn on the JG terminal before the FW or RV terminal.
(Do the same if the RUN command source is set to the Digital Operator.)

(Example 1)

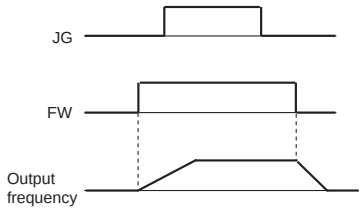

With jogging stop selection A039 set to "00", "01", or "02", jogging does not function if the FW signal is turned on first.

(Example 2)

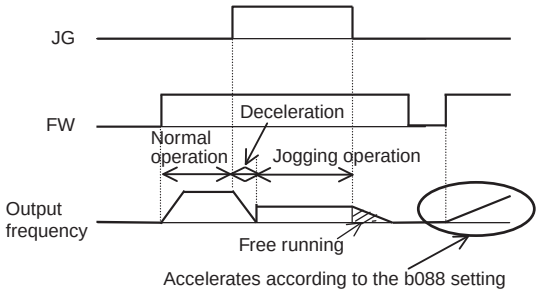

With A039 set to "03", "04", or "05", jogging functions even if the FW signal is turned on first. However, if the JG signal is turned off before the FW signal, the motor coasts to a free running stop.

Torque Boost

- Compensates for the voltage drop caused by the primary resistance of the motor, or by wiring to suppress torque reduction at a low speed range.
- To select the automatic torque boost for A041/A241, set motor capacity selection H003/H203 and motor pole number selection H004/H204 according to your motor.

Parameter No.	Function name	Data	Default setting	Unit
A041	Torque boost selection	00: Manual torque boost 01: Automatic torque boost	00	—
A241	*2nd torque boost selection			
A042	Manual torque boost voltage	0.0 to 20.0 (Ratio to the value of AVR voltage selection A082)	1.0	%
A242	*2nd manual torque boost voltage			
A342	*3rd manual torque boost voltage			
A043	Manual torque boost frequency	0.0 to 50.0 (Ratio to base frequency)	5.0	%
A243	*2nd manual torque boost frequency			
A343	*3rd manual torque boost frequency			
H003	Motor capacity selection	0.20 to 160.0 (Ratio to base frequency)	Factory default	kW
H203	*2nd motor capacity selection			
H004	Motor pole number selection	2/4/6/8/10	4	Pole
H204	*2nd motor pole number selection			

Parameter No.	Function name	Data	Default setting	Unit
A046	Automatic torque boost voltage compensation gain	0. to 255.	100.	%
A246	2nd automatic torque boost voltage compensation gain			
A047	Automatic torque boost slip compensation gain	0. to 255.	100.	%
A247	2nd automatic torque boost slip compensation gain			

* To switch to the 2nd/3rd control, allocate 08 (SET)/17 (SET3) to the desired multi-function input and then turn it on.

■Manual Torque Boost

- Outputs the voltage set in A042/A242/A342 or A043/A243/A343.
- In A042/A242/A342, set a ratio based on the voltage set in the motor voltage selection as 100%.

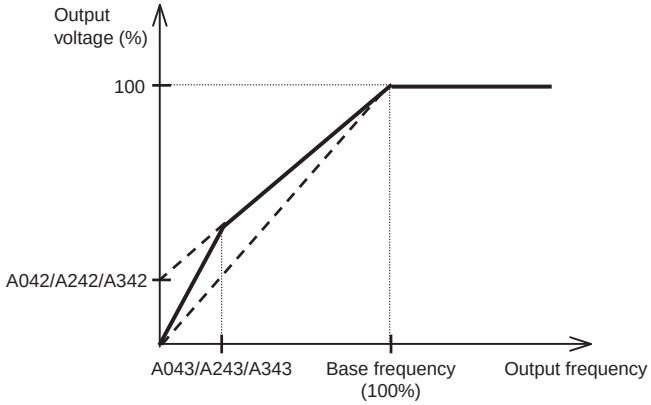

- If you raise the set value of the manual torque boost, be careful about motor overexcitation. Otherwise, the motor may burn out.
- In manual torque boost frequency A043/A243/A343, set a ratio based on the base frequency as 100%.

■Automatic Torque Boost

- If the automatic torque boost is selected in the torque boost selection (A041/A241: 01), it operates to adjust the output frequency and voltage automatically, depending on the load level. (In actual control, the automatic torque boost is used along with the manual torque boost.)
- To select the automatic torque boost, set motor capacity selection H003/H203 and motor pole number selection H004/H204 correctly according to your motor.
- To avoid a possible overcurrent trip during deceleration, set the AVR selection to "Always ON" (A081: 00).
- If the automatic torque boost cannot provide the desired characteristics, adjust each item, as shown in the following table.

Phenomenon	Adjusting method	Adjustment item
Insufficient torque at low speed (Motor does not run at low speed.)	Gradually increase the voltage setting of the manual torque boost.	A042/A242
	Gradually increase the slip compensation gain of the automatic torque boost.	A047/A247
	Gradually increase the voltage compensation gain of the automatic torque boost.	A046/A246
	Reduce the set value of the carrier frequency.	b083
Rotation speed lowers when load is applied.	Gradually increase the slip compensation gain of the automatic torque boost.	A047/A247
Rotation speed increases when load is applied.	Gradually reduce the slip compensation gain of the automatic torque boost.	A047/A247
Overcurrent trip occurs when load is applied.	Gradually reduce the voltage compensation gain of the automatic torque boost.	A046/A246
	Gradually reduce the slip compensation gain of the automatic torque boost.	A047/A247
	Gradually reduce the voltage setting of the manual torque boost.	A042/A242

Control Method (V/f Characteristics)

You can set V/f characteristics (output voltage/output frequency).

Parameter No.	Function name	Data	Default setting	Unit
A044	V/f characteristics selection	00: Constant torque characteristics (VC) 01: Special reduced torque characteristics (Special VP) 02: Free V/f characteristics (Only A044/A244 can be set.) 03: Sensorless vector control (SLV) (Only A044/A244 can be set.[*1]) 04: 0-Hz sensorless vector control (Only A044/A244 can be set.[*2]) 05: Sensor vector control (V2) (Only A044 can be set.)	00	—
A244	*2nd V/f characteristics selection			
A344	*3rd V/f characteristics selection			
Related functions		A046, A246, A047, A247, A082, H003, H203, H004, H204		

* To switch to the 2nd/3rd control, allocate 08 (SET)/17 (SET3) to the desired multi-function input and then turn it on.

*1. Refer to "Sensorless Vector Control" (page 4-113).

*2. Refer to "0-Hz Sensorless Vector Control" (page 4-114).

■Constant Torque Characteristics (VC)

Output voltage is proportional to output frequency.
While proportional from 0 Hz to base frequency, the output voltage is constant from base to maximum frequencies.

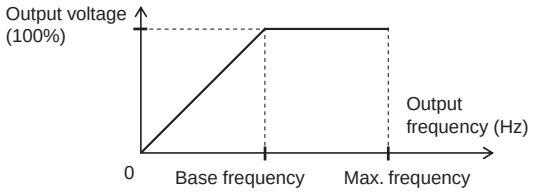

■Special Reduced Torque Characteristics (Special VP)

Suitable for a fan or pump that requires torque in a low speed range. These have VC characteristics only for low deceleration in reduced torque characteristics.

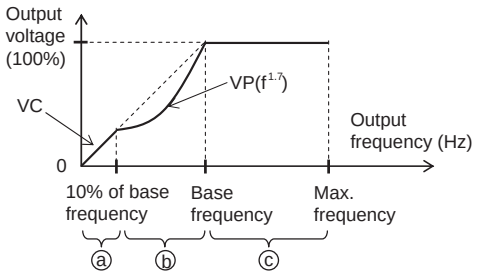

Period a: Provides constant torque characteristics within a range from 0 Hz to 10% of the base frequency.
(Example) If the base frequency is 60 Hz, the Inverter provides constant torque characteristics within a range from 0 to 6 Hz.

Period b: Provides reduced torque characteristics within a range from 10% to 100% of the base frequency.
The Inverter outputs voltage based on a curve of the 1.7th power of the frequency.

Period c: Provides constant voltage characteristics within a range from the base frequency to the maximum frequency.

■Free V/f Setting

- You can set desired V/f characteristics by setting 7 points of voltage and frequency. (b100 to b113)
- The free V/f frequencies should always be $1 \leq 2 \leq 3 \leq 4 \leq 5 \leq 6 \leq 7$.

All the default settings are 0 Hz. You must set Free V/f setting 7 first. (Operation is disabled by factory default.)

• If the free V/f setting is enabled, the functions of torque boost A041/A241, base frequency A003/A203/A303, and maximum frequency A004/A204/A304 are disabled. (Free V/f frequency 7 is regarded as the maximum frequency.)

Parameter No.	Function name	Data	Description	Default setting	Unit
b100	Free V/f frequency 1	0. to Free V/f frequency 2	Set frequencies for each break point.	0	Hz
b102	Free V/f frequency 2	0. to Free V/f frequency 3			
b104	Free V/f frequency 3	0. to Free V/f frequency 4			
b106	Free V/f frequency 4	0. to Free V/f frequency 5			
b108	Free V/f frequency 5	0. to Free V/f frequency 6			
b110	Free V/f frequency 6	0. to Free V/f frequency 7			
b112	Free V/f frequency 7	0. to 400.			
b101	Free V/f voltage 1	0.0 to 800.0	Set output voltages for each break point. *	0.0	V
b103	Free V/f voltage 2				
b105	Free V/f voltage 3				
b107	Free V/f voltage 4				
b109	Free V/f voltage 5				
b111	Free V/f voltage 6				
b113	Free V/f voltage 7				
Related functions		A044, A244, A344			

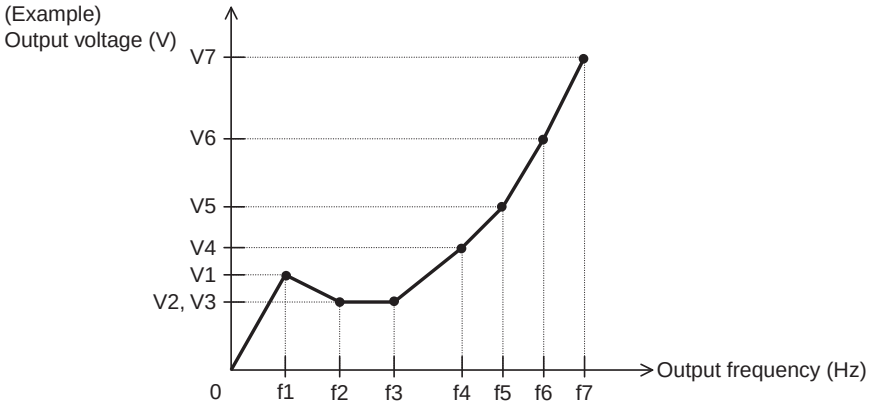

* Even if free V/f voltages 1 to 7 are set to 800 V, the Inverter cannot output voltage higher than the input voltage or the value of the motor voltage selection.
Use thorough caution to verify that the output characteristic setting is proper. An improper setting causes overcurrent during acceleration or deceleration, or vibration of the motor and/or machine.

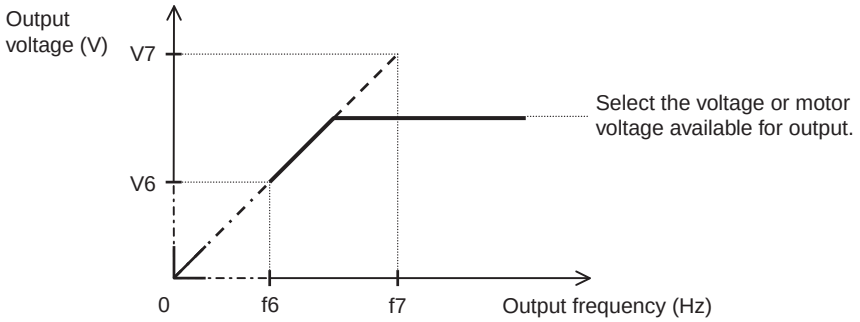

Output Voltage Gain

- Changes the Inverter output voltage, based on the voltage selected in AVR voltage selection A082 as 100%.
- You can avoid motor hunting by reducing the output voltage gain.

Parameter No.	Function name	Data	Default setting	Unit
A045	Output voltage gain	20. to 100.	100.	%
Related functions		A082		

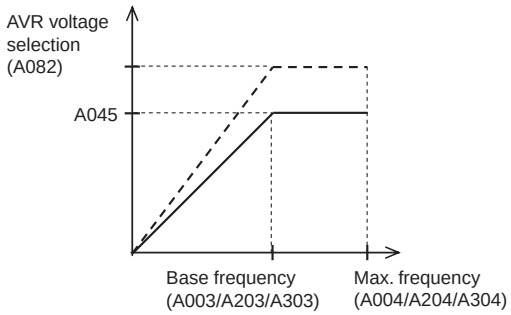

DC Injection Braking

- DC injection braking is applied to the motor depending on the motor load.
- Two methods are available for DC injection braking: One is the external method via the multi-function input terminal; the other is the internal method performed automatically to start/stop the motor.
  Even if DC injection braking is used, however, the motor may not stop depending on the moment of inertia of the motor load.

Parameter No.	Function name	Data	Default setting	Unit
A051	DC injection braking selection	00: Disabled 01: Enabled 02: Frequency control [A052 set value]	00	—
A052	DC injection braking frequency	0.0 to 400	0.5	Hz
A053	DC injection braking delay time	0.0 to 5.0	0.0	s
A054	DC injection braking power	0. to 100. (0.4 to 55 kW)	50.	%
		0. to 80. (75 to 132 kW)	40.	
A055	DC injection braking time	0.0 to 60.0	0.5	s
A056	DC injection braking method selection	00: Edge operation 01: Level operation	01	—
A057	Startup DC injection braking power	0. to 100. (0.4 to 55 kW)	0.	%
		0. to 80. (75 to 132 kW)	0.	
A058	Startup DC injection braking time	0.0 to 60.0	0.0	s

Parameter No.	Function name	Data	Default setting	Unit
A059	DC injection braking carrier frequency	0.5 to 15.0 (0.4 to 55 kW)	5.0	Hz
		0.5 to 10.0 (75 to 132 kW)	3.0	
Related functions		C001 to C008		

■DC Injection Braking Carrier Frequency

You can set a DC injection braking carrier frequency in A059. Note that setting a 5 kHz or higher frequency automatically reduces the braking power. Refer to the following figure (DC injection braking power limit).

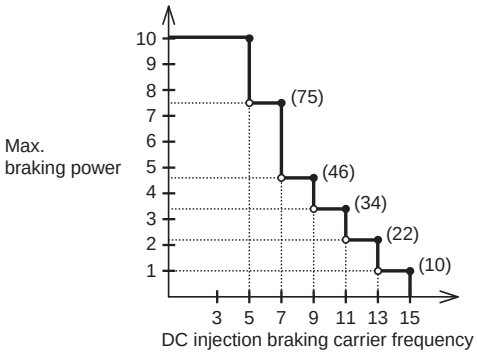

DC Injection Braking Power Limit (55 kW max.)

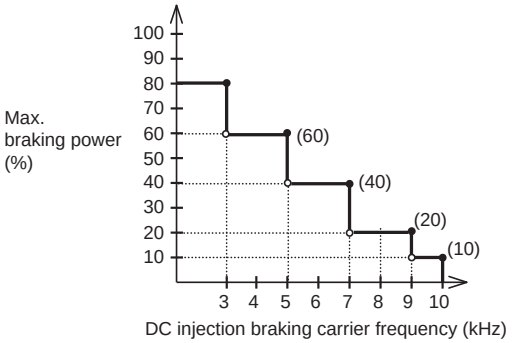

DC Injection Braking Power Limit (75 to 132 kW)

■External DC Injection Braking

- Allocate 07 (DB) to any of multi-function inputs C001 to C008.
- DC injection braking can be applied by turning on/off the DB terminal, regardless of DC injection braking selection A051.
- Set a braking power level in DC injection braking power A054.
- If DC injection braking delay time A053 is set, the Inverter output is shut off during the set time period and the motor goes into free-run status. After the set time elapses, DC injection braking starts.
- Set DC injection braking time A055 via the Digital Operator or the DB terminal while taking into account motor heat generation.
- Perform each setting according to your system after setting DC injection braking method selection A056.

(a) Edge operation (A056: 00)	(b) Level operation (A056: 01)
(Example 1-a) 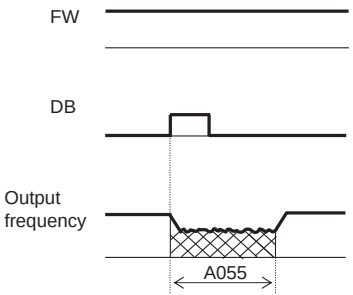	(Example 1-b) 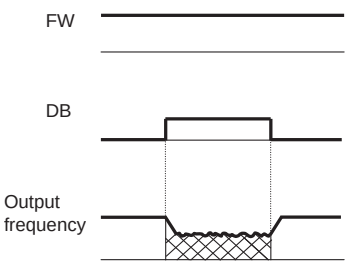

(a) Edge operation (A056: 00)	(b) Level operation (A056: 01)
(Example 2-a) 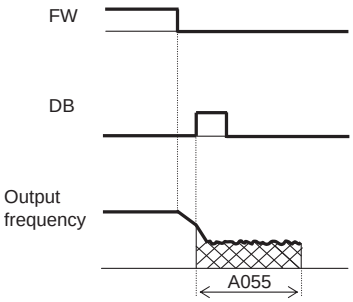	(Example 2-b) 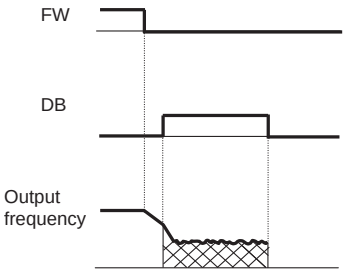
(Example 3-a) 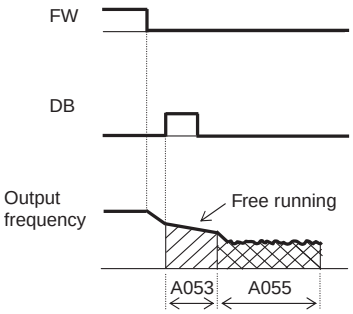	(Example 3-b) 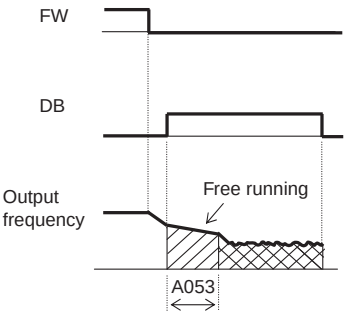

■Internal DC Injection Braking (A051: 01)

- DC injection braking is applied without terminal operation at start/stop of the Inverter. To use internal DC injection braking, set DC injection braking selection A051 to 01.
- Set the startup DC injection braking power in A057. In A058, set the startup DC injection braking time, regardless of the edge or level operation. (Example 4-a), (Example 4-b)
- Set DC injection braking power A054 to define the braking power other than at startup.
- Set the DC injection braking starting frequency in DC injection braking frequency A052.
- Once DC injection braking delay time A053 is set, the Inverter stops output when the frequency reaches the A052 value after the RUN command (FW) has been turned off. During the set time in A053, the motor remains in free-run status. After the set time in A053, DC injection braking starts.
- Edge and Level operations for internal DC injection braking work differently when the RUN command switches from STOP to RUN.

Edge operation: Giving priority to DC injection braking time A055, performs DC injection braking for the set time in A055. DC injection braking operates for the set time in A055 when the output frequency reaches the set value in A052 after the RUN command (FW) is turned off. Even if the RUN command is turned on during DC injection braking, the latter is effective during the set time in A055. (Example 5-a), (Example 6-a)

Level operation: Giving priority to the RUN command, shifts to normal operation, ignoring DC injection braking time A055. When the RUN command is turned on during DC injection braking, returns to normal operation, ignoring the set time in A055. (Example 5-b), (Example 6-b)

(a) Edge operation	(b) Level operation
(i) During startup (example 4-a) 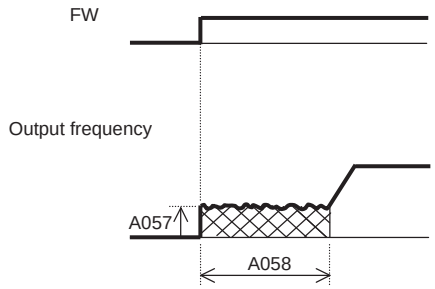	(ii) During startup (example 4-b) 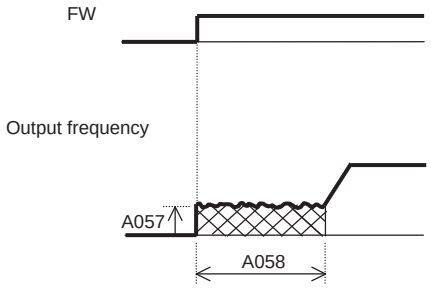
(ii) During stop (example 5-a) 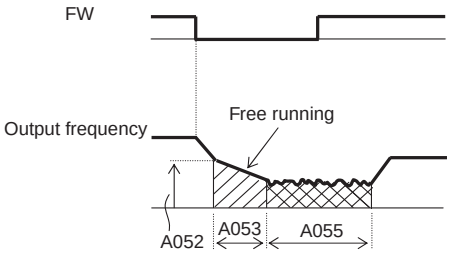	(ii) During stop (example 5-b) 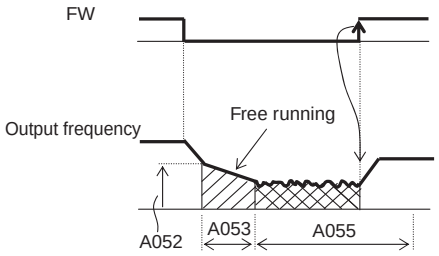
(iii) During stop (example 6-a) 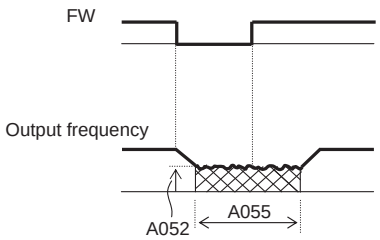	(iii) During stop (example 6-b) 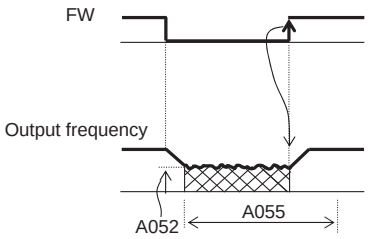

■Internal DC Injection Braking (Operates Only at the Set Frequency) (A051: 02)

- DC injection braking can be applied when the output frequency becomes lower than the DC injection braking frequency (A052).
- Neither (2) external nor (3) internal DC injection braking is available while this function is selected.
- Operates only when the RUN command is turned on.
- DC injection braking starts when both the reference and current frequencies become lower than A052. (Example 7-a)
- When the reference frequency exceeds the A052 set value by 2 Hz or more, DC injection braking is released and the output returns to normal. (Example 7-a)
- If the reference frequency is "0" when the operation starts with analog input, the initial operation is DC injection braking because both the reference and current frequencies are "0". (Example 7-b)

•If the RUN command is turned on with the frequency reference established (or a value larger than the A052 setting is input), the initial operation is set to normal output.

(Example 7-a)	(Example 7-b)
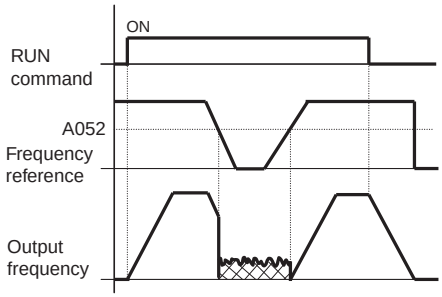	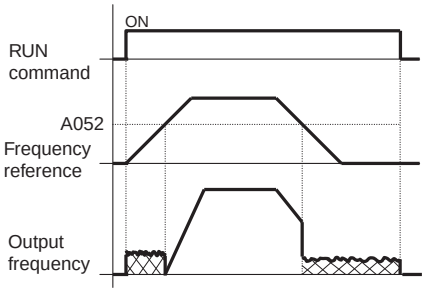

•The operation to return to normal varies depending on the setting of DC injection braking power A054.

(a) Edge operation	(b) Level operation
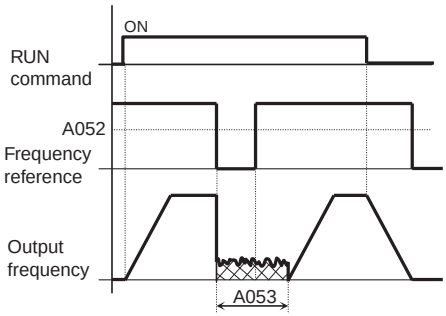	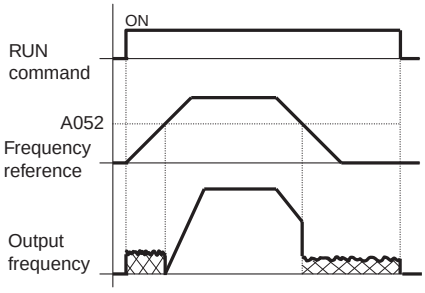

Frequency Limit

•You can set both the upper/lower limits to the output frequency.

Parameter No.	Function name	Data	Default setting	Unit
A061	Frequency upper limit	0.0/Frequency lower limit [A062] to Max. frequency [A004]	0.0	Hz
A261	*2nd frequency upper limit	0.0/2nd frequency lower limit [A262] to 2nd max. frequency [A204]	0.0	
A062	Frequency lower limit	0.0/Starting frequency to Frequency upper limit [A061]	0.0	
A262	*2nd frequency lower limit	0.0/Starting frequency to 2nd frequency upper limit [A261]	0.0	
Related functions		C001 to C008		

* To switch to the 2nd/3rd control, allocate 08 (SET)/17 (SET3) to the desired multi-function input and then turn it on.

•Does not accept any frequency reference beyond the upper/lower limits.
•Set the upper limit first. Make sure that the upper limit (A061/A261) is larger than the lower limit (A062/A262).

- Make sure that the upper and lower limiter settings do not exceed the maximum frequency (A004/A204/A304).
- Make sure that the output frequency (F001) and multi-step speeds 1 to 15 (A021 to A035) are not lower than the lower limit setting and not higher than the upper limit setting.
- Neither limit works if set to 0 Hz.
- Disabled when the 3rd control is selected.

■When Using FV-FC and FI-FC

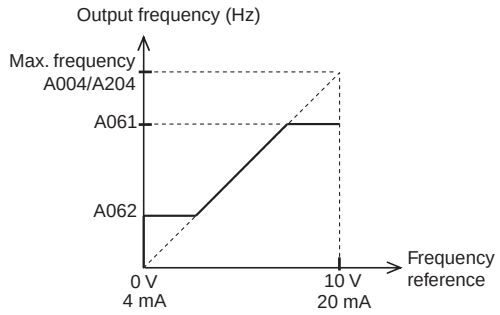

- Once the lower limit is set, the Inverter outputs the frequency (A062) set for the lower limit, if 0 V (4 mA) is input to the frequency reference.

■When Using FE-FC

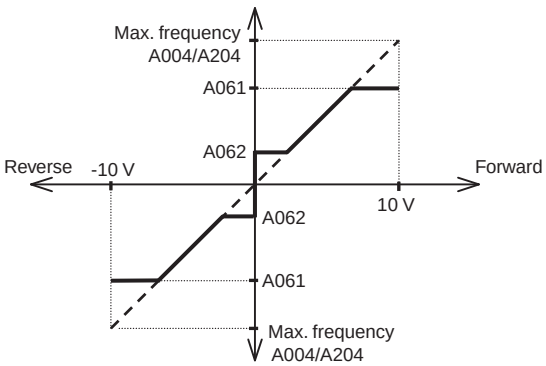

- When the lower limit is used for the FE input, the rotation at 0 V is fixed to A062 for either forward or reverse rotation, as described below.

(a) When the RUN command is set to the terminal (A002: 01)

Terminal	Rotation when FE = 0 V
FW (ON)	A062 for forward rotation
RV (ON)	A062 for reverse rotation

(a) When the RUN command is set to the Digital Operator (A002: 02)

F004	Rotation when FE = 0 V
00	A062 for forward rotation
01	A062 for reverse rotation

Frequency Jump Function

•The frequency jump function helps avoid resonant points of loaded machines.

Parameter No.	Function name	Data	Default setting	Unit
A063 A065 A067	Jump frequency 1 Jump frequency 2 Jump frequency 3	0.0 to 400.0	0.0	Hz
A064 A066 A068	Jump frequency width 1 Jump frequency width 2 Jump frequency width 3	0.0 to 10.0	0.5	
Related functions		C001 to C008		

•You cannot set output frequencies within a jump frequency setting range, where the frequency jump function avoids steady operation.
•The output frequency fluctuates continuously according to the acceleration/deceleration time during both actions.
You can set up to three points for the jump frequency.

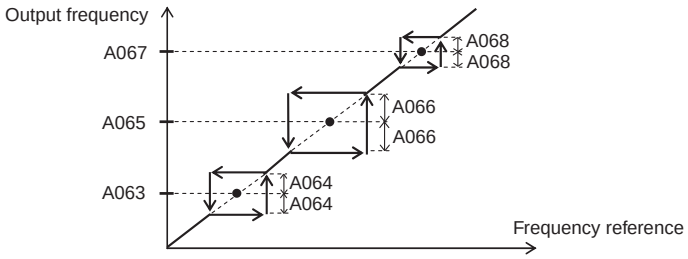

Acceleration Stop Function

•When the moment of inertia of a machine load is large, this function delays acceleration until the motor starting slip is reduced.
Use this function, if an overcurrent trip occurs during startup.
•Does not depend on acceleration pattern selection A097, and works with all acceleration patterns.

Parameter No.	Function name	Data	Default setting	Unit
A069	Acceleration stop frequency	0.0 to 400.0	0.00	Hz
A070	Acceleration stop time	0.0 to 60.0	0.0	s

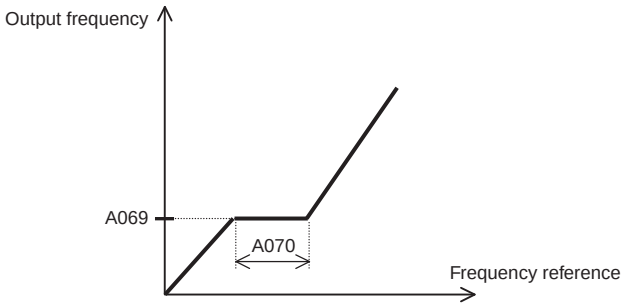

PID Function

• This function enables process control of such elements as flow rate, air volume, and pressure.

Parameter No.	Function name	Data	Default setting	Unit
A071	PID selection	00: Disabled 01: Enabled 02: Reverse output enabled	00	—
A072	PID P gain	0.2 to 5.0	1.0	—
A073	PID I gain	0.0 to 3600.0	1.0	s
A074	PID D gain	0.00 to 100.0	0.0	s
A075	PID scale	0.01 to 99.99	1.00	Time
A076	PID feedback selection	00: FI-FC (4 to 20 mA) 01: FV-FC (0 to 10 V) 02: RS485 communication 03: Pulse train frequency 10: Operation function output	00	—
A077	Reverse PID function	00: Deviation = Target value - Feedback value 01: Deviation = Feedback value - Target value	00	—
A078	PID output limit function	0.0 to 100.0	0.0	%
A079	PID feedforward selection	00: Disabled 01: FV-FC (0 to 10 V) 02: FI-FC (4 to 20 mA) 03: FE-FC (-10 to 10 V)	00	—
C044	PID deviation excessive level	0. to 100.	3.0	%
C052	PID FB upper limit	0.0 to 100.0	100	%
C053	PID FB lower limit		0.0	%
Related functions		d004, A001, A005, A006, C001 to C008, C021 to C025		

• To use this function, set A071 to "01" or "02".
• You can disable the PID operation in progress using an external signal.
To use this function, allocate "23" (PID: PID disabled) to any of the multi-function inputs. While the PID terminal is turned on, the Inverter disables the PID function and outputs normally.
• You can limit the PID output under various conditions.

■Basic Structure of PID Control (Example)

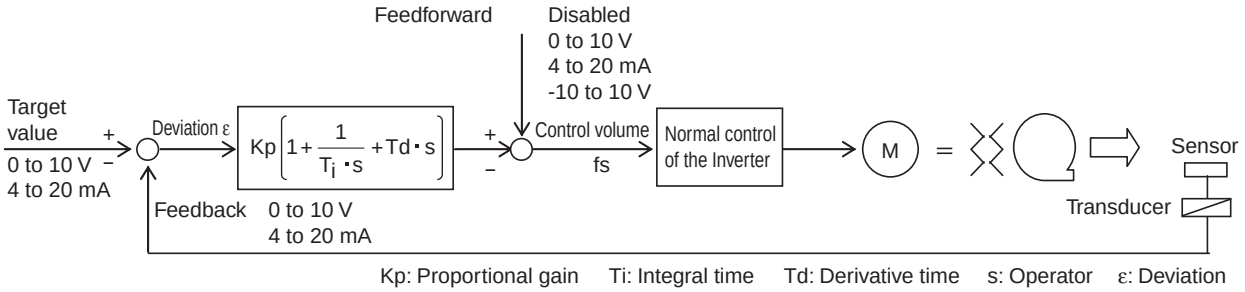

■PID Operation

P Operation

•Operation where the control volume is proportional to the target value

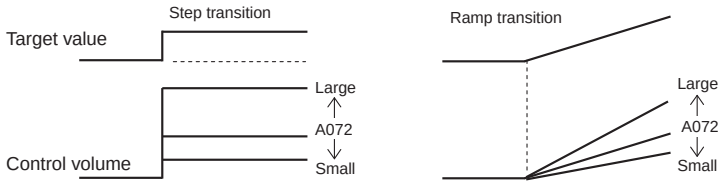

I Operation

•Operation where the control volume increases linearly according to time

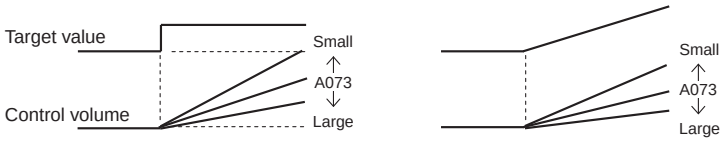

D Operation

•Operation where the control volume is proportional to the variation ratio of the target value

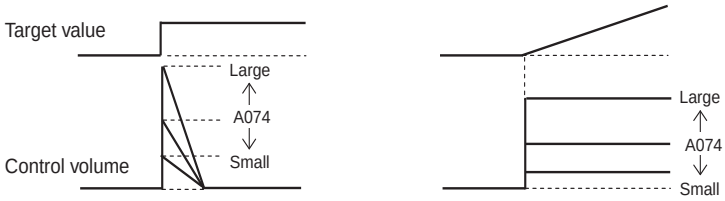

•PI operation is the combination of the above P and I operations; PD is P and D operations; PID is P, I and D operations.

■Feedback Selection

•Select a terminal used for feedback signals in PID feedback selection A076.
•The target value depends on the terminal selected in frequency reference selection A001 other than that in A076.
When A001 is set to "01" (terminal), the setting of FV/FI selection A005 is disabled.
•When analog input is selected for PID feedback and A001 is set to "01" (terminal), the PID target value is selected depending on the A006 set value, as shown in the following table.

PID feedback selection (A076)		PID target value			
		A006 = 00	A006 = 01	A006 = 02	A006 = 03
00 (FI-FC)		FV + FE (Not reversible)		FV + FE (Reversible)	FV
01 (FV-FC)		FI + FE (Not reversible)		FI + FE (Reversible)	FI
10 (operation result)	FI included in operands	FV + FE (Not reversible)		FV + FE (Reversible)	FV
	FV included in operands	FI + FE (Not reversible)		FI + FE (Reversible)	FI
	FI and FV are the operands	FE (Reversible)			

•To select RS485 for PID feedback, transfer data as described below.

<ASCII (C078 = 00)>

Transfer data using "command 01". To transfer feedback data, set the most significant byte of frequency data to "1".

(Example) To send 5 Hz:

Transmission data is "set value × 100" and expressed in 6 bytes → "000500"

Set the most significant byte to "1". → "100500"

ASCII conversion → "31 30 30 35 30 30"

Note: With ASCII data, the set value is frequency (Hz).

<ModBus-RTU (C078 = 01)>

Write data in holding register address 0006h. (100% = 10000)

Register No.	Function name	Function code	R/W	Monitor data and setting parameters	Data resolution
0006h	PID feedback	—	R/W	0 to 10000	0.01 [%]

Note: You can read and write data. However, you can read data only when ModBus-RTU is selected for the PID feedback. Data cannot be read under other settings.

- If "03" (pulse train input) is set for PID feedback A076, the Inverter obtains a percent conversion result (100% at max. frequency) as a feedback value, relative to the input pulse train frequency value (Hz).

■Feedforward Selection

- Select a terminal used for feedforward signals in PID feedforward selection A079.
- The A079 setting is enabled even if the terminal selected in A079 is duplicated with the terminal selected for target value or feedback value input.
- If A079 is set to "disabled", feedforward control is disabled.

■Reverse PID Function

Depending on the sensor characteristics, the polarity of deviation between the target and feedback values may not match the Inverter's command. In this case, you can invert the deviation polarity by setting A077 to "01".

(Example) To control a refrigerator compressor:

If the specified temperature range of a temperature sensor is -20°C to 100°C at 0 to 10 (V), the target value is 0°C, and the current temperature is 10°C, the Inverter reduces the frequency under normal PID control since the feedback value is higher than the target value.

→ Set A077 to "01" so that the Inverter increases the frequency.

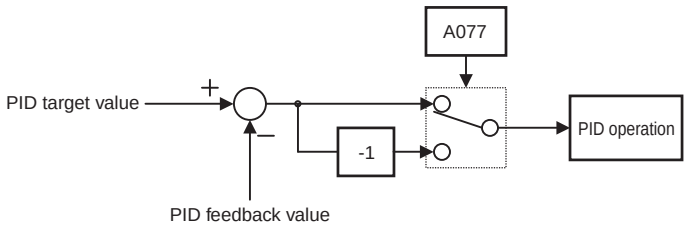

■PID Output Limit Function

- This function limits PID output within a variable range relative to the target value.
- To use this function, set PID output limit function A078. The output frequency will be limited within a range of "target value ± (A078)", with the maximum frequency defined as 100%.
- With A078 set to 0.0, this function is disabled.

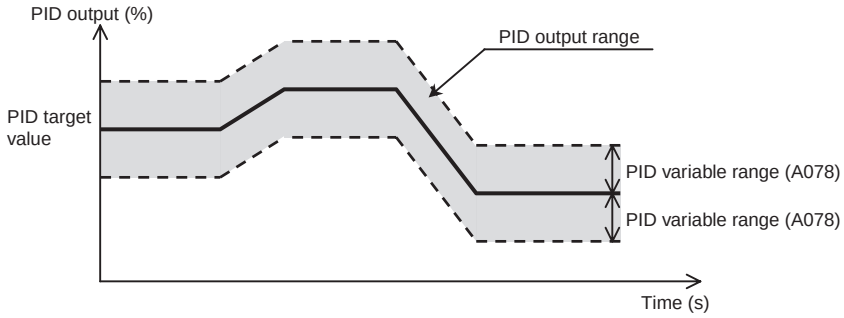

■PID Reverse Output

- When a PID operation result is a negative value under normal PID control, the frequency reference to the Inverter is limited at 0 Hz. However, if PID selection A071 is set to "02" (reverse output enabled), reverse output can be provided for the Inverter when the PID operation result is a negative value.
- When A071 = 02, the above-mentioned PID variable range limit function and the PID output stop function are disabled.

■PID Gain Adjustment

- If a stable response cannot be obtained in PID function operation, adjust each gain as follows according to the situation.

•Feedback value variation is slow when the target value is changed.	→ Raise P gain A072.
•The feedback value changes fast but isn't stable.	→ Lower P gain A072.
•The target and feedback values wouldn't match smoothly.	→ Lower I gain A073.
•The feedback value fluctuates unstably.	→ Raise I gain A073.
•Response is slow even with P gain raised.	→ Raise D gain A074.
•With P gain raised, the feedback value vibrates and isn't stable.	→ Lower D gain A074.

■Excessive Deviation/Output

- You can set PID deviation excessive level C044 during PID control. With this function allocated, the multi-function output terminal is turned on when the PID deviation ε reaches the set level in C044.
- C044 can be set from 0 to 100. The setting corresponds to the range of 0 to the maximum target value.
- Allocate 04 (OD) to any of multi-function output terminals C021 to C025 or relay output terminal C026.

■Feedback Comparison Signal

- If a PID feedback value is out of the specified range, it can be output to a multi-function output terminal.
- Allocate 31 (FBV) to any of multi-function output terminals C021 to C025 or relay output terminal C026.

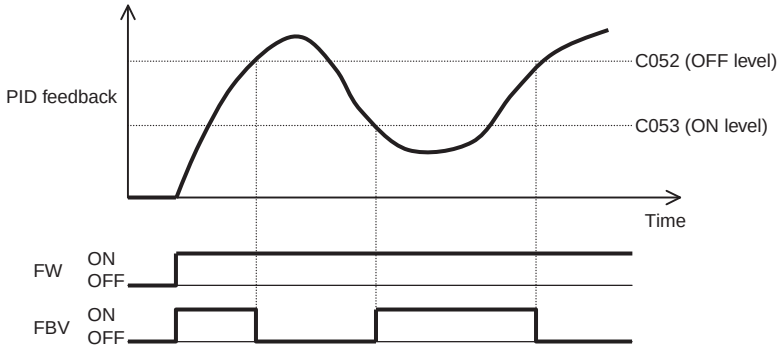

■PID Feedback Value Monitor

- You can monitor the PID feedback value.
- The monitor value is displayed as the product of the feedback value and PID scale A075.
  "Monitor display" = "Feedback value (%)" × "A075 setting"

■PID Integral Reset

- Clears the integral value of PID operation.
- Allocate 24 (PIDC) to any of multi-function inputs C001 to C008.
- Clears the integral value every time the PIDC terminal is turned on.
  Do not turn on the PIDC terminal during PID operation to avoid a possible overcurrent trip.
  Turn on the PIDC terminal after turning off PID operation.

AVR Function

- This function outputs voltage to the motor correctly even if the incoming voltage to the Inverter fluctuates. With this function, output voltage to the motor is based on the voltage set in the motor voltage selection.

Parameter No.	Function name	Data	Default setting	Unit
A081	AVR selection	00: Always ON 01: Always OFF 02: OFF during deceleration	02	—
A082	AVR voltage selection	200-V class: 200/215/220/230/240 400-V class: 380/400/415/440/460/480	200/400	—
Related functions		d004, A001, A005		

- With A081 (AVR selection), set whether to enable or disable this function.
- Note that the Inverter cannot output voltage beyond that of the incoming voltage.
- To avoid a possible overcurrent trip during deceleration, set the AVR selection to "Always ON" (A081: 00).

Parameter No.	Data	Description	Note
A081	00	Always ON	Enabled during acceleration, constant speed , and deceleration.
	01	Always OFF	Disabled during acceleration, constant speed, and deceleration.
	02	OFF during deceleration	Disabled only during deceleration in order to reduce the energy regenerated to the Inverter by increasing the motor loss. This will avoid a possible trip due to regeneration during deceleration.

Automatic Energy-saving Operation Function

• This function automatically minimizes the Inverter output power during constant speed operation, and is suitable for load with reduced torque characteristics (e.g. fan, pump).

Parameter No.	Function name	Data	Default setting	Unit
A085	RUN mode selection	00: Normal operation 01: Energy-saving operation 02: Automatic operation	00	—
A086	Energy-saving response/ accuracy adjustment	0% to 100%	50	%

• To operate with this function, set RUN mode selection A085 to "01".
You can adjust the response and accuracy with energy-saving response/accuracy adjustment A086.
• Controls the output power at a comparatively slow rate. Should rapid load fluctuation like impact load occur, the motor may stall, resulting in an overcurrent trip.

Parameter No.	Function name	Data	Response	Accuracy
A086	Energy-saving response/ accuracy adjustment	0 ⇕ 100	Slow ⇕ Fast	High ⇕ Low

Automatic Optimum Acceleration/Deceleration

• The automatic acceleration/deceleration function eliminates the need for acceleration/deceleration settings during Inverter operation.

Parameter No.	Function name	Data	Default setting	Unit
A085	RUN mode selection	00: Normal operation 01: Energy-saving operation 02: Automatic operation	00	—
Related functions		A044, A244, A344, b021, b024, b022, b025		

• Conventionally, the user had to set an Inverter acceleration/deceleration time depending on the actual load conditions. However, this function can automatically set an acceleration/deceleration time, making full use of the Inverter's capacity.
The acceleration time is a time during which acceleration is performed within a current value set in the overload limit parameter (when the overload limit function is enabled), or within approx. 150% of the rated current (when the overload limit function is disabled). The deceleration time is a time during which deceleration is performed within approx. 150% of the rated current value, or within a DC voltage in the Inverter circuit of approx. 370 V (200V-class) or approx. 740 V (400 V-class). Thus, the Inverter enables real-time response to a change in applied load and inertia, and sets acceleration/deceleration time automatically.

• Note the following before use:
Note 1: This function is not suitable for a machine that needs a fixed acceleration/deceleration time. Acceleration/deceleration time varies depending on applied load and inertia.
Note 2: If the machine inertia exceeds approx. 20 times that of the motor shaft, the Inverter may trip. In this case, reduce the carrier frequency.

Note 3: Acceleration/deceleration time varies depending on fluctuations in current value, even with the same motor.
Note 4: The automatic optimum acceleration/deceleration setting is enabled only during V/f control. When sensorless vector control is selected, the Inverter performs normal operation.
Note 5: If the jogging operation is performed when the automatic operation is selected, the Inverter performs automatic acceleration, which is different from normal jogging operation.
Note 6: When the applied load is larger than the rating, deceleration time may be prolonged.
Note 7: If acceleration and deceleration are frequently repeated, the Inverter may trip.
Note 8: When the internal braking circuit is used, or when the regenerative braking unit is externally installed, the motor cannot stop within the specified deceleration time because of braking resistance. In this case, do not use the automatic optimum acceleration/deceleration function.
Note 9: When using a lower rank motor size than specified for the Inverter, enable the overload limit function (b021), and set the overload limit level (b022) to 1.5 times the rated current of the motor.

2-step Acceleration/Deceleration Function

• By setting this function, you can change the acceleration/deceleration time during acceleration/deceleration.

Parameter No.	Function name	Data	Default setting	Unit
A092	Acceleration time 2	0.01 to 99.99 100.0 to 999.9 1000. to 3600.	15.0	s
A292	*2nd acceleration time 2			s
A392	*3rd acceleration time 2			s
A093	Deceleration time 2	0.01 to 99.99 100.0 to 999.9 1000. to 3600.	15.0	s
A293	*2nd deceleration time 2			s
A393	*3rd deceleration time 2			s
A094	2-step acceleration/ deceleration selection	00: Switched via multi-function input 09 (2CH) (example 1) 01: Switched by setting (example 2) 02: Enabled only when switching forward/ reverse (example 3)	00	—
A294	*2nd 2-step acceleration/ deceleration selection			
A095	2-step acceleration frequency	0.00 to 99.99 100.0 to 400.0	0.0	Hz
A295	*2nd 2-step acceleration frequency			
A096	2-step deceleration frequency	0.00 to 99.99 100.0 to 400.0	00	Hz
A296	*2nd 2-step deceleration frequency			
Related functions		F002, F202, F302, F003, F203, F303, C001 to C008		

* To switch to the 2nd/3rd control, allocate 08 (SET)/17 (SET3) to the desired multi-function input and then turn it on.

•Select an acceleration/deceleration time switching method from the following three:
Switching via a multi-function input
Automatic switching at a specified frequency
Automatic switching only when switching between forward/reverse
If the 3rd control function is selected, however, switching by the 2-step acceleration/deceleration frequency is disabled.
•To switch via a multi-function input, allocate 09 (2CH) to any of C001 to C008.

(Example 1) When A094/A294 is set to 00

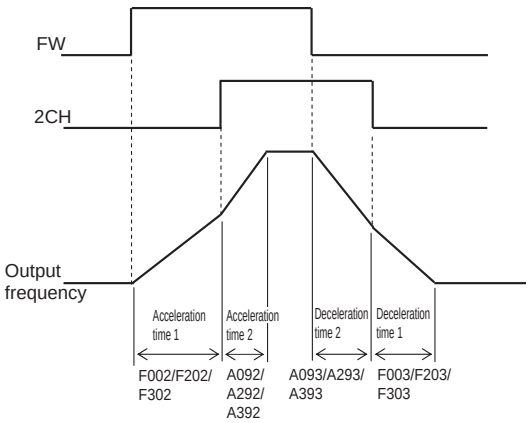

(Example 2) When A094/A294 is set to 01

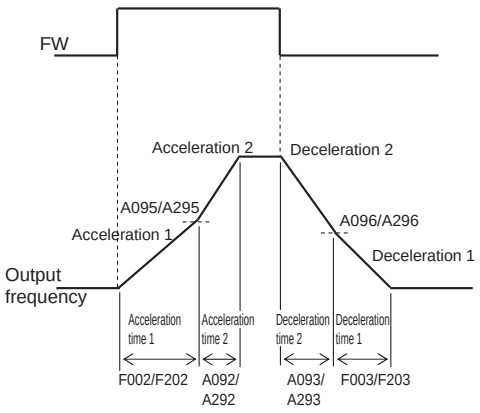

(Example 3) When A094/A294 is set to 02

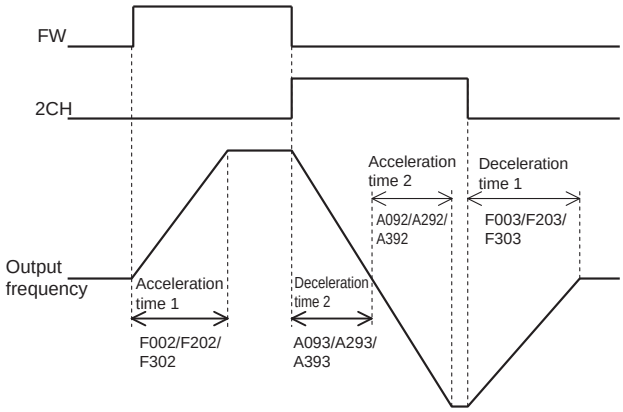

Acceleration/Deceleration Pattern

•Acceleration/deceleration pattern can be set for each system.

Parameter No.	Function name	Data	Default setting	Unit
A097	Acceleration pattern selection	00: Line 01: S-shape curve 02: U-shape curve 03: Inverted U-shape curve 04: EL-S-shape curve	00	—
A098	Deceleration pattern selection			

Parameter No.	Function name	Data	Default setting	Unit
A131	Acceleration curve parameter	01 (small curve) to 10 (large curve)	02	—
A132	Deceleration curve parameter			
A150	EL-S-curve ratio 1 during acceleration	0 to 50	25	%
A151	EL-S-curve ratio 2 during acceleration			
A152	EL-S-curve ratio 1 during deceleration	0 to 50	25	%
A153	EL-S-curve ratio 2 during deceleration			

- To select an acceleration or deceleration pattern, use A097 or A098, respectively.
- You can set acceleration and deceleration patterns individually.
- If any item other than "Line" (A097/A098 = 00) is selected for the acceleration/deceleration pattern, the acceleration/deceleration time is prolonged when this function is used with analog input (A001 = 01).

■Pattern Selection

Select an acceleration/deceleration pattern with reference to the following table.

Parameter No.	Set values				
	00	01	02	03	04
	Line	S shape	U shape	Inverted U shape	EL-S shape
A097 (Acceleration)	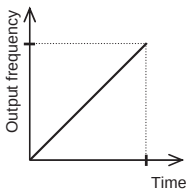	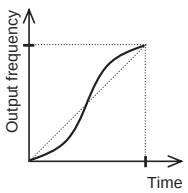	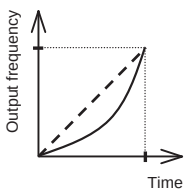	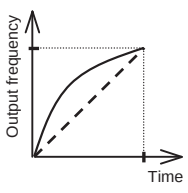	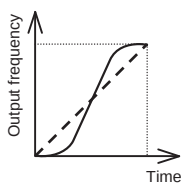
A098 (Deceleration)	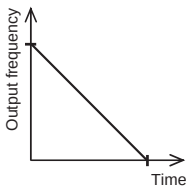	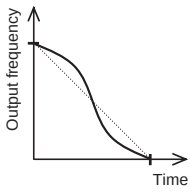	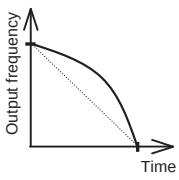	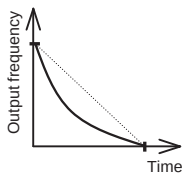	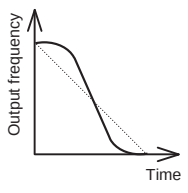
Description	Accelerates/ Decelerates linearly before reaching the set output frequency value.	Helps prevent the collapse of cargo on the elevating machine or conveyor.	Helps with tension control and roll break prevention (for a winding machine, etc.).		Provides shockless start/stop as with the S pattern, but the intermediate section is linear.

■Pattern Curve Parameter (Curve Factor)

•Determine a curve factor with reference to the figures below.

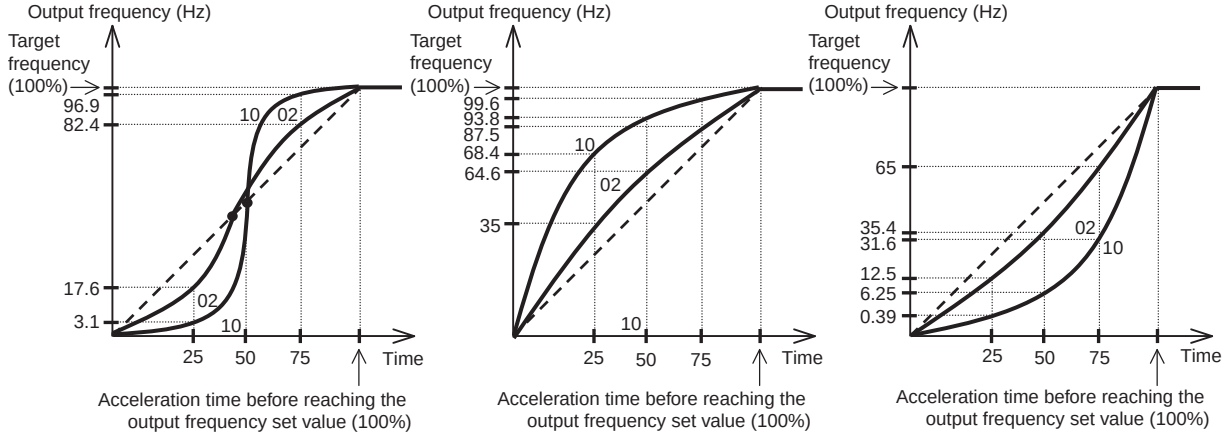

•The S pattern has an intermediate section where acceleration/deceleration time is shortened.

•If LAD cancel (LAC) is selected for a multi-function input and that input is turned on, the acceleration/deceleration pattern is ignored, and the output frequency instantaneously follows the reference frequency.

■EL-S Curve Ratio

If the EL-S pattern is used, you can set a curve ratio (A151 to A153) individually for acceleration and deceleration.

If all settings are "50 (%)", the Inverter operates in the same manner as with the S curve.

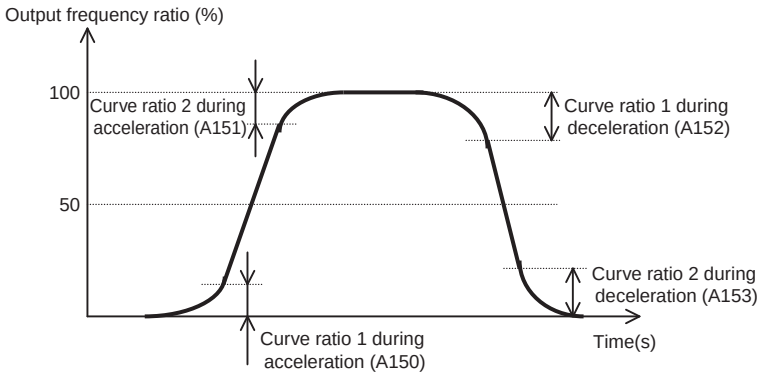

Operation Frequency Function

- Two systems of frequency reference operation results are available for the frequency reference and PID feedback value.

Parameter No.	Function name	Data	Default setting	Unit
A141	Operation frequency input A setting	00: Digital Operator (F001) (A020/A220/A320) 01: Digital Operator (FREQ adjuster) (Enabled when 3G3AX-OP01 is used.) 02: Input FV 03: Input FI 04: RS485 communication 05: Option 1 06: Option 2 07: Pulse train frequency	02	—
A142	Operation frequency input B setting		03	—
A143	Operator selection	00: Addition (A + B) 01: Subtraction (A - B) 02: Multiplication (A × B)	00	—
Related functions		A001 = 10, A076 = 10		

Note 1: When this function is enabled, the Up/Down function cannot be used. In addition, frequency cannot be changed through key operations from output frequency monitor d001, frequency conversion monitor d007, or output frequency setting F001.
Note 2: The same setting is available in A141 and A142.

- To use this function as a frequency reference, set frequency reference selection A001 to "10".
- To use this function as a PID feedback, set PID feedback selection A076 to "10".

Frequency Addition Function

- The value set in frequency addition amount A145 can be added to or subtracted from the selected frequency reference value.
- To use this function, allocate 50 (ADD) to any of the multi-function inputs.
  The A145 value is added or subtracted with the ADD terminal turned on.

Parameter No.	Function name	Data	Default setting	Unit
A145	Frequency addition amount	0.0 to 400.0	0.00	Hz
A146	Frequency addition direction	00: Add A145 value to output frequency 01: Subtract A145 value from output frequency	00	—
Related functions		C001 to C008, ADD input		

Note 1: If the sign of the frequency reference is changed ((-) → (+), or (+) → (-)) as a result of operation, the rotation direction will be inverted.
Note 2: When the PID function is used, the frequency addition function is enabled for a PID target value. (Note that A145 is displayed in % (in increments of 0.01%).)

<Group B: Detailed Function Parameters>

Momentary Power Interruption/Trip Retry (Restart)

■Restart During Momentary Power Interruption

- You can set whether the Inverter trips or retries (restarts) when a momentary power interruption or undervoltage occurs.
- If the retry function is selected in retry selection b001, the Inverter retries for the number of times set in b005 (for momentary power interruption) or b009 (for undervoltage), and trips on the next time.
  (Under the limitless retry setting, the Inverter doesn't trip.)
- You can use b004 to select whether the Inverter trips or not when a momentary power interruption or undervoltage occurs during stop.
- When selecting the retry function, set retry condition b008 according to your system.
- If undervoltage is retained for 40 seconds even during retry operation, it results in E09 (undervoltage trip).

Parameter No.	Function name	Data	Default setting	Unit
b001	Retry selection*4 *6	00: Outputs an alarm after a trip 01: Restarts from 0 Hz at retry 02: Matches the frequency at retry and starts (example 1) *3 03: Performs frequency pull-in start at retry and trips after deceleration stop *1 *3 04: Performs frequency pull-in restart at retry (example 1) *3	00	—
b002	Allowable momentary power interruption time	0.3 to 25.0: If the momentary power interruption is within the set time, the Inverter follows the setting in b001.	1.0	s
b003	Retry wait time	0.3 to 100. Time before restart	1.0	s
b004	Momentary power interruption/ undervoltage trip during stop selection *2 *4	00: Disabled 01: Enabled 02: Disabled during stop, and during deceleration stop when the RUN command is turned off	00	—
b005	Momentary power interruption retry time selection	00: Restarts 16 times during momentary power interruption 01: Restarts limitlessly during momentary power interruption	00	—
b007	Frequency matching lower limit frequency setting	0.00 to 400.0 When the motor free-running frequency falls below this lower limit frequency, the Inverter restarts at 0 Hz (examples 3 and 4)	0.00	Hz
b008	Trip retry selection *7	00: Outputs an alarm after a trip 01: Restarts from 0 Hz at retry 02: Matches the frequency at retry and starts 03: Performs frequency pull-in start at retry and trips after deceleration stop 04: Performs frequency pull-in restart at retry	00	—
b009	Undervoltage retry time selection	00: Restarts 16 times in the event of undervoltage 01: Restarts limitlessly in the event of undervoltage	00	—

Parameter No.	Function name	Data	Default setting	Unit
b010	Overvoltage/ overcurrent retry time	1 to 3 Select the number of retry times in the event of overvoltage/overcurrent *5	3	Time
b011	Trip retry wait time	0.3 to 100. Time before restart	1.0	s
b028	Frequency pull-in restart level	0.20 × Rated current to 2.00 × Rated current (0.4 to 55 kW) 0.20 × Rated current to 1.80 × Rated current (75 to 132 kW) Current limit level at frequency pull-in restart	Rated current	A
b029	Frequency pull-in restart parameter	0.10 to 30.00 Frequency reduction time at frequency pull-in restart	0.50	s
b030	Starting frequency at frequency pull-in restart	00: Frequency at interruption 01: Max. frequency 02: Set frequency	00	—
Related functions		C021 to C025, C026		

*1. If an overvoltage/overcurrent trip occurs during deceleration, momentary power interruption error E16 appears, and the motor goes into free-run status. In this case, increase the deceleration time.
*2. When direct current (P-N) is supplied to control power supply terminal Ro-To, the Inverter may detect undervoltage at power interruption and then trip. If there is any problem with your system, set "00" or "02".
*3. The Inverter may start at 0 Hz if:
The output frequency is equal to or lower than 1/2 of the base frequency
The motor induction voltage quickly attenuates
*4. Even if retry selection b001 is set to "Retry" (01 to 03) and selection of momentary power interruption/ undervoltage trip during stop b004 is set to "Disabled" (00 or 02), the Inverter trips when the actual momentary power interruption time exceeds the allowable momentary power interruption time. (Example 2)
*5. Even if the trip retry operation is selected, the Inverter trips if the cause of the trip is not remedied after the retry wait time (b003) elapses. In this case, increase the retry wait time.
*6. Even if the retry operation is selected, the Inverter trips when undervoltage remains for 40 seconds or longer.
*7. If frequency matching start or frequency pull-in restart is selected for retry operation, the Inverter abruptly restarts at power-on, by alarm reset or retry start.

•Below is the timing chart for frequency matching start (retry selection b001 = 02).
Note that the Inverter switches, regardless of settings, to the initial state when the power supply is turned on in the case of a complete power discharge.
t0: Momentary power interruption time
t1: Allowable momentary power interruption time (b002)
t2: Retry wait time (b003)

(Example 1)
Duration of momentary power interruption
< Allowable duration of momentary power interruption (b002)

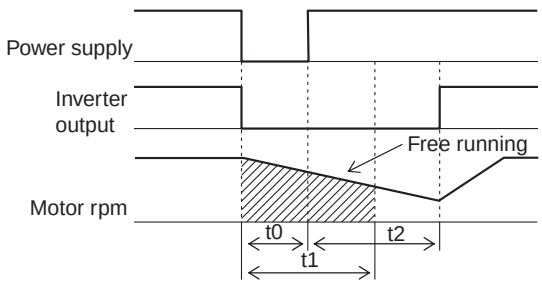

(Example 2)
Duration of momentary power interruption
> Allowable duration of momentary power interruption (b002)

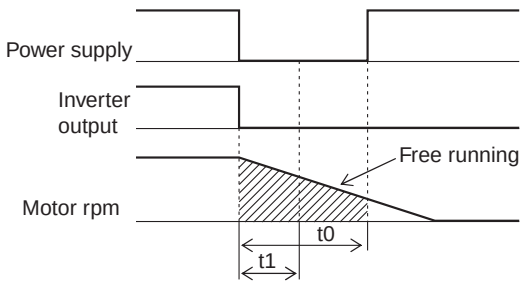

(Example 3) Motor frequency (rpm) > b007

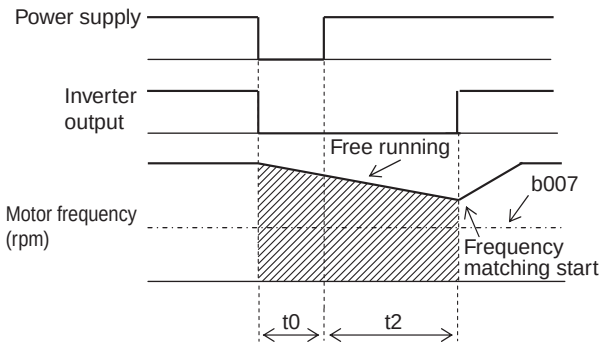

(Example 4) Motor frequency (rpm) < b007

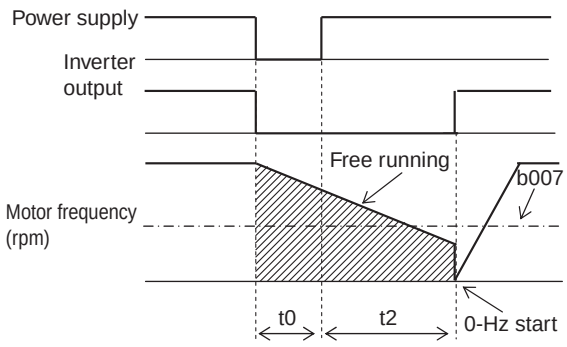

■Alarm Output for Momentary Power Interruption/Undervoltage During Stop

- Use b004 to select whether to enable an alarm output in case of momentary power interruption or undervoltage.
- An alarm output continues while Inverter control power supply remains.

Alarm output for momentary power interruption/undervoltage during stop
Standard (examples 5 to 7)
Operation where DC (P-N) is supplied to control power supply terminal Ro-To (examples 8 to10)

(Example 5) b004: 00

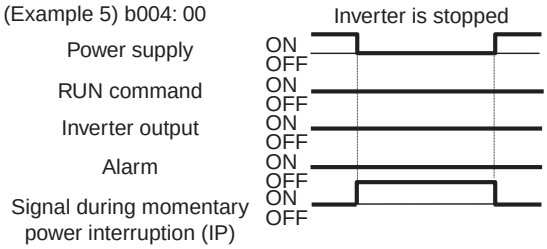

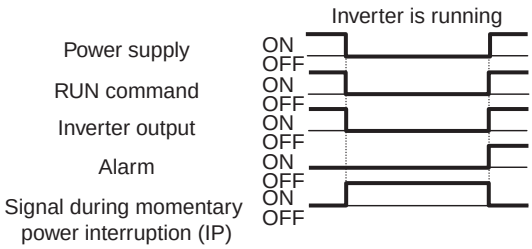

(Example 6) b004: 01

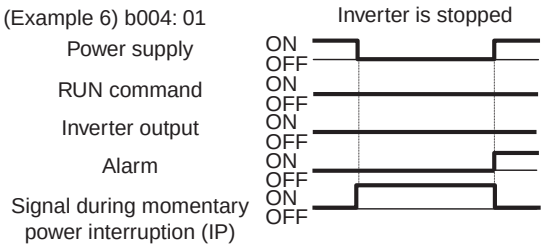

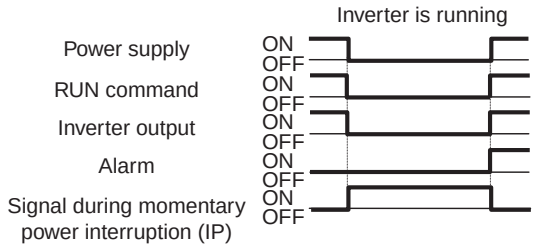

(Example 7) b004: 02

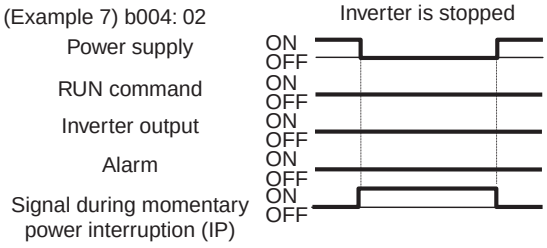

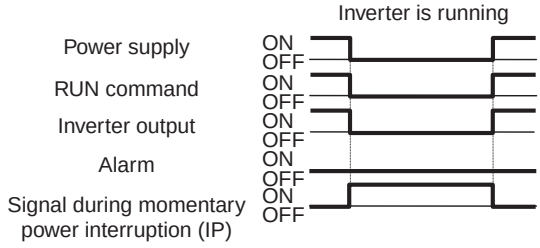

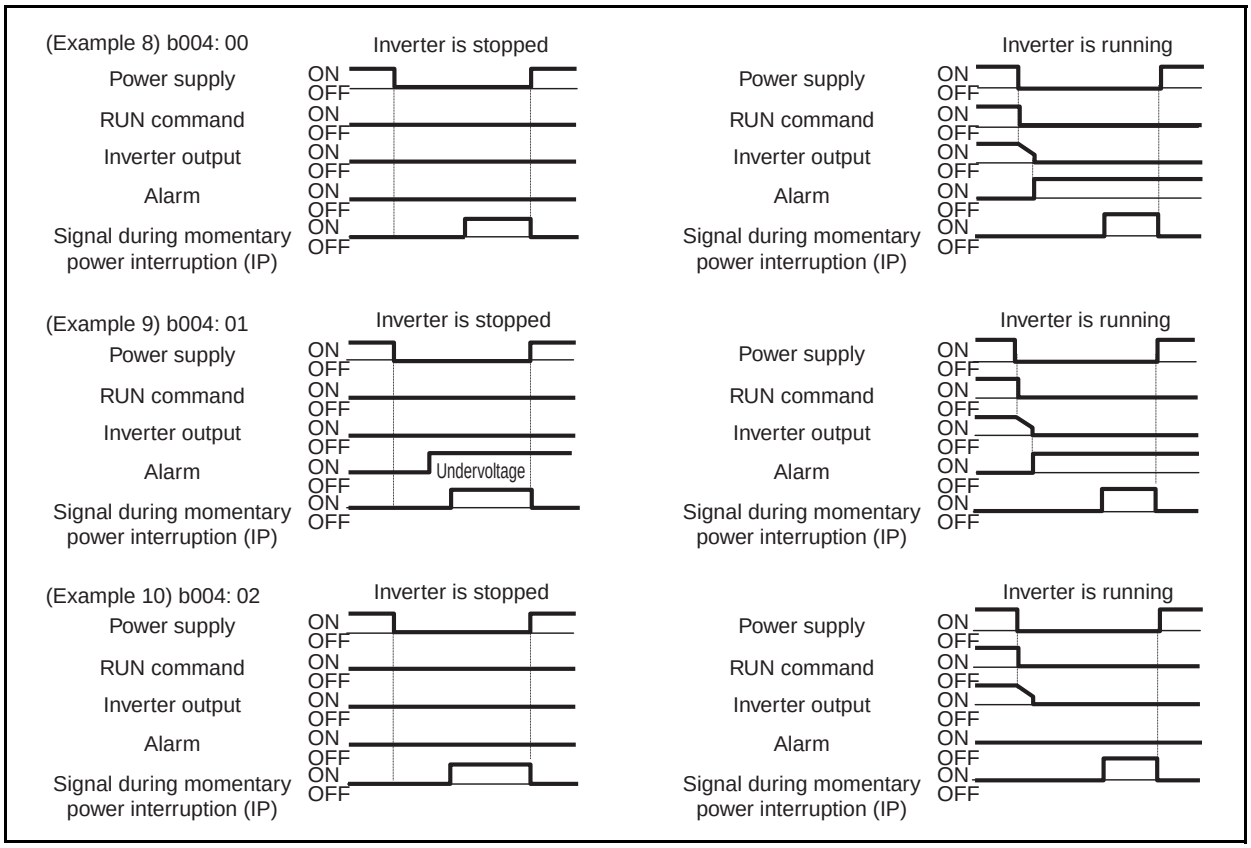

Note 1: You can allocate the momentary power interruption signal (IP: 08) and the undervoltage signal (UV: 09) to any of multi-function output terminals P1 to P5 selection (C021 to C025) or the relay output terminal (C026).

Note 2: If power interruption is retained for 1 second or longer, refer to the reset description ("Reset" (page 4-85)).

■Restarting Procedure

- Frequency matching restart

  This method restarts the Inverter by detecting frequency and rotation direction based on the motor's residual voltage.

- Frequency pull-in restart

  The Inverter starts output at the frequency set in starting frequency selection b030, and searches for a point where frequency and voltage are balanced to restart the Inverter, while holding current at the frequency pull-in restart level (b028).

  If the Inverter trips with this method, reduce the b028 set value.

•The Digital Operator displays [oooo] until restart, after output is shut off.

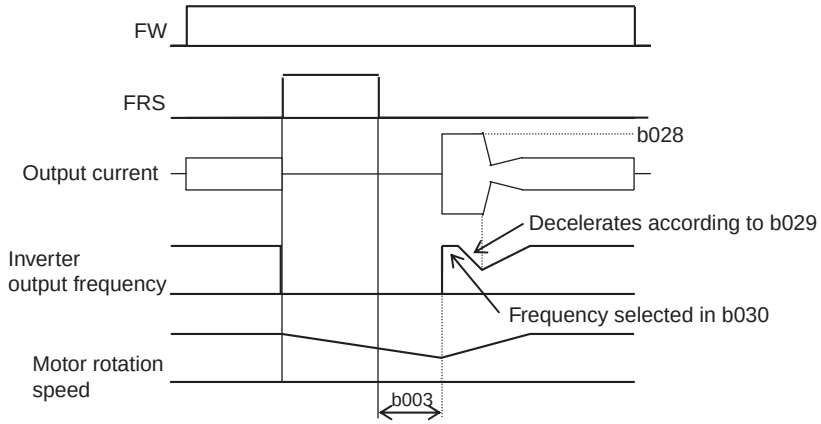

Input Power Supply Phase Loss Protection Function Selection

•This function outputs an alarm when the Inverter's input power supply has phase loss.

Parameter No.	Function name	Data	Default setting	Unit
b006	Input phase loss protection selection	00: Disabled 01: Enabled	00	—

Phase loss may cause the Inverter to fail, as follows:

- •The main capacitor ripple current increases, resulting in remarkable reduction in the capacitor's service life.
- •When load is applied, the Inverter's internal converter or thyristor may be damaged.

Electronic Thermal Function

- •Causes a trip to protect the motor from overheating. Set this according to the motor rated current.
- •Provides the most appropriate protection characteristics, taking into account the decline of the motor cooling capability at a low speed.
- •Outputs an alarm signal before an electronic thermal trip.

Parameter No.	Function name	Data	Default setting	Unit
b012	Electronic thermal level	0.20 × Rated current to 1.00 × Rated current	Rated current	A
b212	*2nd electronic thermal level			
b312	*3rd electronic thermal level			
b013	Electronic thermal characteristics selection	00: Reduced torque characteristics 01: Constant torque characteristics 02: Free setting	00	—
b213	*2nd electronic thermal characteristics selection			
b313	*3rd electronic thermal characteristics selection			

Parameter No.	Function name	Data	Default setting	Unit
b015	Free setting, electronic thermal frequency 1	0. to 400.	0.	Hz
b017	Free setting, electronic thermal frequency 2			
b019	Free setting, electronic thermal frequency 3			
b016	Free setting, electronic thermal current 1	0.0 to Rated current	0.0	A
b018	Free setting, electronic thermal current 2			
b020	Free setting, electronic thermal current 3			
C061	Thermal warning level	0. to 100. *1	80	%
Related functions		C021 to C025, C026		

* To switch to the 2nd/3rd control, allocate 08 (SET)/17 (SET3) to the desired multi-function input and then turn it on.
*1. Set a percentage relative to the electronic thermal multiplication value. When the value reaches 100%, an overload trip (E05) occurs.

■Electronic Thermal Level (Motor Protection Level)

(Example) 3G3RX-A2150 (0.4 to 55 kW)
Rated current: 64 A
Setting range: 12.8 A (20%) to 64.0 A (100%)

- The graph on the right shows the time limit characteristics with the electronic thermal level (b012) set to 64 A.

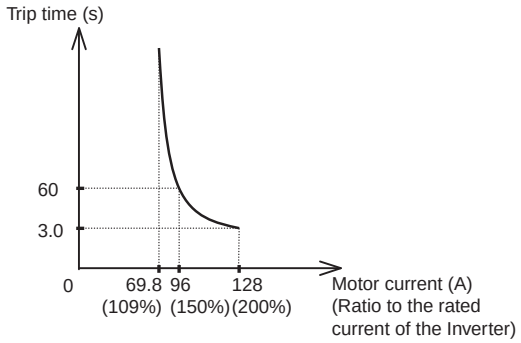

(Example) 3G3RX-A4750 (75 to 132 kW)
Rated current: 149 A
Setting range: 29.8 A (20%) to 149 A (100%)

- The graph on the right shows the time limit characteristics with the electronic thermal level (b012) set to 149 A.

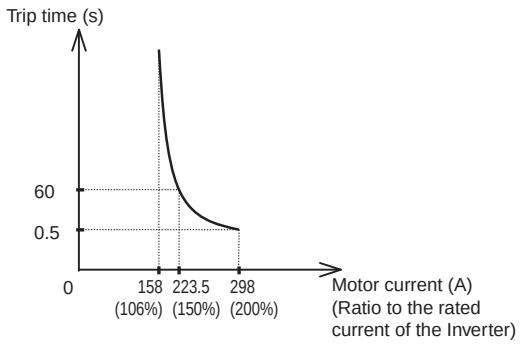

■Electronic Thermal Characteristics

- The frequency characteristics are integrated with the above b012/b212/b312 set values.
- A general-purpose motor requires reduced load (current) because the lower the output frequency is, the lower the cooling capability of its self-cooling fan.
- The reduced torque characteristics are designed to fit the heat radiation of a general-purpose motor.

Reduced Torque Characteristics

Multiplied by the time limit characteristics set in b012/b212/b312 for each frequency.

(Example) 3G3RX-A2150 (Rated current: 64 A), b012 = 64 (A), Base frequency = 60 Hz, Output frequency = 20 Hz

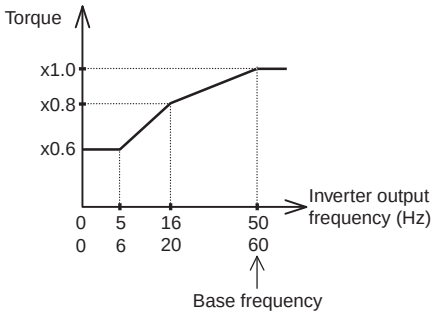

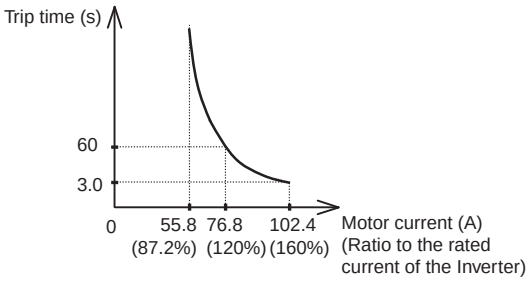

Constant Torque Characteristics

Do not skip this setting when using a constant torque motor.

(Example) 3G3RX-A2150 (Rated current: 64 A), b012 = 64 (A), Output frequency = 2.5 Hz

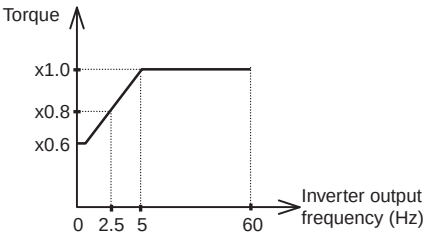

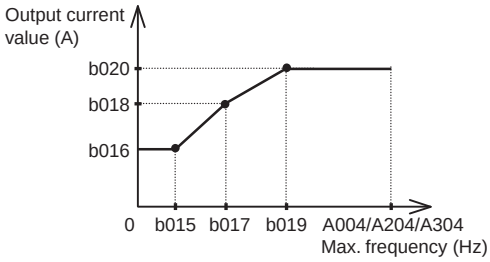

Free Setting

To protect the motor according to load, you can freely set the electronic thermal characteristics. Below is the setting range.

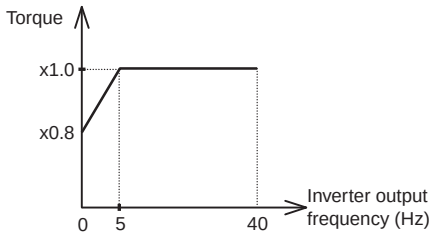

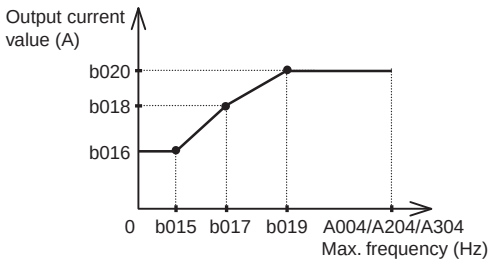

(Example) Output frequency = b017

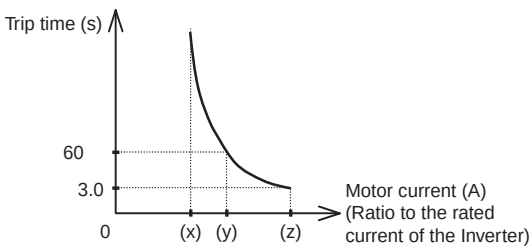

(x): (b018/Rated current) × 109%
(y): (b018/Rated current) × 150%
(z): (b018/Rated current) × 200%

■Thermal Warning

- This function outputs an alarm signal before electronic thermal overheat protection is activated. The warning level can be set in C061.
- Allocate 13 (THM) to any of multi-function output terminals P1 to P5 (C021 to C025) or the relay output terminal (C026).

Overload Limit/Overload Warning

This function helps prevent an overcurrent trip due to rapid load fluctuation in acceleration or constant speed operation.

Parameter No.	Function name	Data	Default setting	Unit
b021	Overload limit selection	00: Disabled 01: Enabled in acceleration/constant speed operation 02: Enabled in constant speed operation 03: Enabled in acceleration/constant speed operation (accelerates during regeneration)	01	—
b024	Overload limit selection 2		01	—
b022	Overload limit level	0.20 × Rated current to 2.00 × Rated current (0.4 to 55 kW) 0.20 × Rated current to 1.80 × Rated current (75 to 132 kW)	1.50 × Rated current	A
b025	Overload limit level 2		1.50 × Rated current	A
b023	Overload limit parameter	0.1 to 30.00	1.0	s
b026	Overload limit parameter 2		1.0	s
C040	Overload warning signal output mode	00: Enabled during acceleration/ deceleration/constant speed 01: Enabled only during constant speed	01	—
C041	Overload warning level	0.0: Does not operate. 0.1 × Rated current to 2.00 × Rated current (0.4 to 55 kW) 0.1 × Rated current to 1.80 × Rated current (75 to 132 kW) (Outputs OL and OL2 signals when reaching the overload warning level.)	Rated current	A
C111	Overload warning level 2		Rated current	
Related functions		C001 to C008, C021 to C025, C026		

■Overload Limit

- The Inverter monitors the motor current during acceleration or constant speed operation in order to lower output frequency automatically according to the overload limit parameter once the motor current reaches the overload limit.
- This function prevents an overcurrent trip caused by excessive moment of inertia during acceleration, or caused by rapid load fluctuations during constant speed operation.
- You can set two types of overload limit functions in b021/b022/b023 and b024/b025/b026.
- To switch between b021/b022/b023 and b024/b025/b026, allocate 39 (OLR) to a multi-function input and then turn it on/off.
- The overload limit level sets a current value for this function to work.
- The overload limit parameter sets a time of deceleration from the maximum frequency to 0 Hz.
- When this function operates, the acceleration time becomes longer than the set time.

- If "sensorless vector control", "0-Hz sensorless vector control", or "sensor vector control" is selected as the control method (V/f characteristics) (refer to "Control Method (V/f Characteristics)" (page 4-21)), and "03" is selected for b021/b024, the frequency increases when a current exceeding the overload limit level flows during regenerative operation.
- If overload limit parameter b023/b026 is set too short, an overvoltage trip may occur because of regenerative energy from the motor caused by automatic deceleration of this function even during acceleration.
- Make the following adjustments if this function operates before the frequency reaches the target value during acceleration.

  Increase the acceleration time. (Refer to "Acceleration/Deceleration Time" (page 4-8).)
  Increase the torque boost. (Refer to "Torque Boost" (page 4-19).)
  Increase the overload limit level (b022/b025).

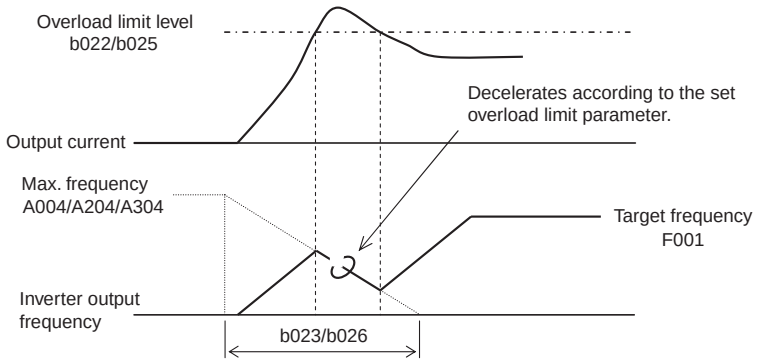

■Overload Warning

- If the applied load is large, the Inverter can output an overload warning signal before an overload trip occurs.
  This helps prevent mechanical damage due to an overload in the carrier machine, or an operation line stop due to overload protection of the Inverter.
- Allocate "03" (OL) or "26" (OL2) to any of multi-function output terminals P1 to P5 (C021 to C025) or the relay output terminal (C026). (Two types of overload warning signals are available for output.)

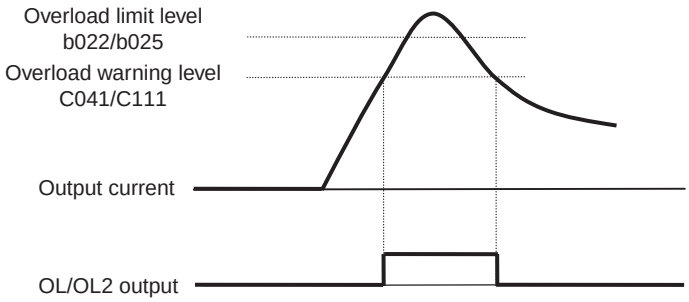

Overcurrent Suppression Function

- This function suppresses overcurrent caused by a steep current rise in rapid acceleration.
- You can set whether to enable or disable this function with b027.

Parameter No.	Function name	Data	Default setting	Unit
b027	Overcurrent suppression function	00: Disabled 01: Enabled	01	—

Note: If you use the Inverter with an elevating machine, disable this function.
Otherwise, the machine may slide down.

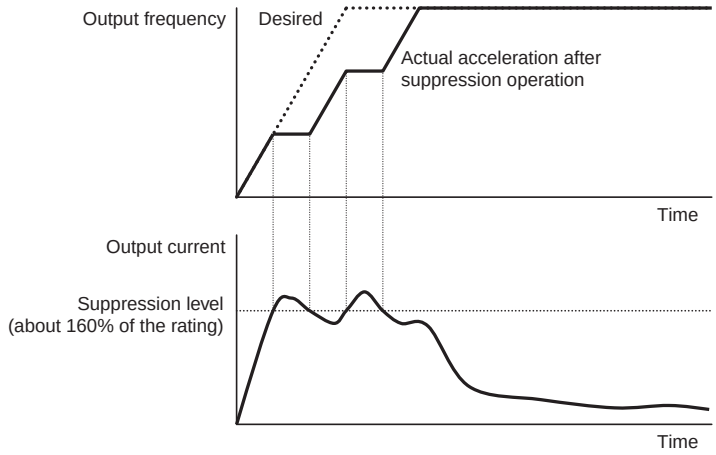

Soft Lock Function

- You can set whether to enable or disable the writing of various code data.
  This helps prevent data rewriting due to erroneous operation.

Parameter No.	Function name	Data	Default setting	Unit
b031	Soft lock selection	00: Data other than b031 cannot be changed when terminal SFT is ON. 01: Data other than b031 and specified frequency parameter cannot be changed when terminal SFT is ON. 02: Data other than b031 cannot be changed. 03: Data other than b031 and specified frequency parameter cannot be changed. 10: Data can be changed during RUN.	01	—
Related functions		C001 to C008, SFT input		

- Select the soft lock setting and performing method from the above table.
- To use a multi-function input terminal, allocate 15 (SFT) to any of multi-function inputs 1 to 8 (C001 to C008).

RUN Time/Power ON Time Exceeded

•If the total RUN time of the Inverter exceeds the time set in ON time setting b034, a RUN/Power ON 'time exceeded' (RNT/ONT) signal is output.

Parameter No.	Function name	Data	Default setting	Unit
b034	RUN time/Power ON time setting	0.: Does not operate. 1. to 9999.: Set in increments of 10 hours. 1000 to 6553: Set in increments of 100 hours. (100000 to 655300 hours)	0	—
Related functions		C021 to C025, C026, d016, d017		

■RUN Time Exceeded (RNT)

•Allocate 11 (RNT) to any of multi-function output terminals P1 to P5 (C021 to C025) or the relay output terminal (C026).
•Set a time in RUN time/Power ON time setting b034.

■Power ON Time Exceeded (ONT)

•Allocate 12 (ONT) to any of multi-function output terminals P1 to P5 (C021 to C025) or the relay output terminal (C026).
•Set a time in RUN time/Power ON time setting b034.

Rotation Direction Limit Selection

•Limits motor rotation directions.
•Enabled in either "control circuit terminal block" or "Digital Operator" control mode.
•When a limited RUN command is input, the Digital Operator displays 0000.

Parameter No.	Function name	Data	Default setting	Unit
b035	Rotation direction limit selection	00: Forward and Reverse are enabled. 01: Only Forward is enabled. 02: Only Reverse is enabled.	00	—

Reduced Voltage Startup Selection

- Slowly increases voltage during motor startup.
- To increase torque during startup, reduce the set value of reduced voltage startup selection b036. Note that if the value is too small, the motor starts in full-voltage starting mode, possibly resulting in an overcurrent trip.

Parameter No.	Function name	Data	Default setting	Unit
b036	Reduced voltage startup selection	00: Reduced voltage startup disabled 01 to 255: 01: Short (approx. 6 ms) ⇕ ⇕ 255: Long (approx. 1.53 s)	6	—
Related functions		b082		

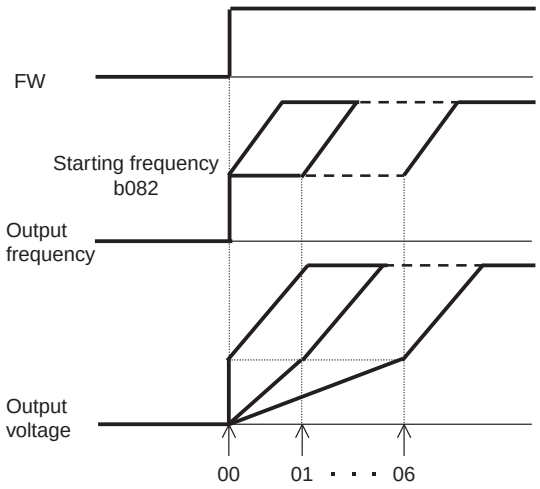

Display Selection

- You can change the items to be displayed on the Digital Operator.

Parameter No.	Function name	Data	Default setting	Unit
b037	Display selection	00: Complete display 01: Individual display of functions 02: User setting 03: Data comparison display 04: Basic display	04	—
U001 to U012	User selection	_ _no: No allocation d001 to P131: Select the code you want to display. (Among all codes. Note that P100 to P131 cannot be used.)	no	—

■Individual Display of Functions

- If a specific function is not selected, its relevant parameter is not displayed.
- For details on the display requirements, refer to the following table.

No.	Display requirements	Parameters displayed when the requirements are met
1	A001 = 01	A005, A006, A011 to A016, A101, A102 A111 to A114, C081 to C083, C121 to C123
2	A001 = 10	A141 to A143
3	A002 = 01, 03, 04, 05	b087
4	A017 = 01	d025 to d027, P100 to P131 (Note that P100 to P131 cannot be used.)
5	A041 = 01	A046, A047
6	A044 = 00, 01	A041, A042, A043
7	A044 = 03, 04, 05	H002, H005, H050
8	A044 = 04	H060, H061
9	A044 = 03, 04, 05, and H002 = 00	H020 to H024
10	A044 = 03, 04, 05, and H002 = 01, 02	H030 to H034
11	Either of A044 or A244 = 03, 04, 05	d008 to d010, d012, b040 to b046, H001, H070 to H073
12	Either of A044 or A244 = 02	b100 to b113
13	A051 = 01, 02	A052, A056 to A058
14	A051 = 01, 02	A053 to A055, A059
15	A071 = 01, 02	d004, A005, A006, A011 to A016, A072 to A078 A101, A102, A111 to A114, C044, C052, C053, C081 to C083, C121 to C123
16	A076 = 10	A141 to A143
17	A094 = 01, 02	A095, A096
18	A097 = 01, 02, 03, 04	A131
19	A097 = 01, 02, 03, 04	A132
20	Any of b012, b212, and b312 = 02	b015 to b020
21	b021 = 01, 02, 03	b022, b023
22	b024 = 01, 02, 03	b025, b026
23	b050 = 01	b051 to b054
24	b095 = 01, 02	b090, b096
25	b098 = 01, 02	b099, C085
26	b120 = 01	b121 to b127
27	Any of C001 to C008 = 05, and A019 = 00	A028 to A035
28	Any of C001 to C008 = 06	A038, A039
29	Any of C001 to C008 = 07	A053 to A055, A059
30	Any of C001 to C008 = 08	F202, F203, A203, A204, A220, A244, A246, A247, A261, A262, A292, A293, A294, b212, b213, H203, H204, H206

No.	Display requirements	Parameters displayed when the requirements are met
31	Any of C001 to C008 = 08, and A041 = 01	A246, A247
32	Any of C001 to C008 = 08, and A244 = 00, 01	A241, A242, A243
33	Any of C001 to C008 = 08, and A244 = 03, 04	H202, H205, H250, H251, H252
34	Any of C001 to C008 = 08, and A244 = 04	H260, H261
35	Any of C001 to C008 = 08, A244 = 03, 04, and H202 = 00	H220 to H224
36	Any of C001 to C008 = 08, A244 = 03, 04, and H202 = 01, 02	H230 to H234
37	Any of C001 to C008 = 08, and A094 = 01, 02	A295, A296
38	Any of C001 to C008 = 11	b088
39	Any of C001 to C008 = 17	F302, F303, A303, A304, A320, A342, A343, A392, A393, b312, b313, H306
40	Any of C001 to C008 = 18	C102
41	Any of C001 to C008 = 27, 28, 29	C101
42	Any of C021 to C026 = 03	C040, C041
43	Any of C021 to C026 = 26	C040, C111
44	Any of C021 to C026 = 02, 06	C042, C043
45	Any of C021 to C026 = 07	C055 to C058
46	Any of C021 to C026 = 21	C063
47	Any of C021 to C026 = 24, 25	C045, C046
48	Any of C021 to C026 = 33	C142 to C144
49	Any of C021 to C026 = 34	C145 to C147
50	Any of C021 to C026 = 35	C148 to C150
51	Any of C021 to C026 = 36	C151 to C153
52	Any of C021 to C026 = 37	C154 to C156
53	Any of C021 to C026 = 38	C157 to C159
54	Any of C021 to C026 = 42	C064

■User Setting

- Displays only the parameters optionally set in U001 to U012.
- In addition to U001 to U012, d001, F001 and b037 are displayed.

■Data Comparison Display

- Displays only the parameters changed from the factory default.
  Note that analog input adjustments C081, C082, C083, C121, C122, and C123, and thermistor adjustment C085 are not displayed.
- All monitors (d***) and F001 are displayed.

■Basic Display

- Displays basic parameters. (Factory default)
- Below are the parameters displayed when this function is enabled.

No.	Data	Function name	No.	Data	Function name
1	d001 to d104	Monitor display	16	A045	Output voltage gain
2	F001	Output frequency setting/monitor	17	A085	RUN mode selection
3	F002	Acceleration time 1	18	b001	Retry selection
4	F003	Deceleration time 1	19	b002	Allowable momentary power interruption time
5	F004	Operator rotation direction selection	20	b008	Trip retry selection
6	A001	Frequency reference selection	21	b011	Trip retry wait time
7	A002	RUN command selection	22	b037	Display selection
8	A003	Base frequency	23	b083	Carrier frequency
9	A004	Maximum frequency	24	b084	Initialization selection
10	A005	FV/FI selection	25	b130	Overvoltage protection function selection during deceleration
11	A020	Multi-step speed reference 0	26	b131	Overvoltage protection level during deceleration
12	A021	Multi-step speed reference 1	27	C021	Multi-function output terminal P1 selection
13	A022	Multi-step speed reference 2	28	C022	Multi-function output terminal P2 selection
14	A023	Multi-step speed reference 3	29	C036	Relay output (MA, MB) contact
15	A044	V/f characteristics selection			
Related functions			U001 to U012		

Initial Screen Selection (Initial Screen at Power-ON)

You can select the Digital Operator screen to be displayed at power-on among the following items. (By factory default, "01" (d001) is selected.)

Parameter No.	Function name	Data	Default setting	Unit
b038	Initial screen selection	00: Screen when the Enter key was pressed last 01: d001 (Output frequency monitor) 02: d002 (Output current monitor) 03: d003 (Rotation direction monitor) 04: d007 (Output frequency monitor [after conversion]) 05: F001 (Output frequency setting/monitor)	01	—

Note: With "00" (screen on which the Enter key was last pressed) selected, if the last screen is other than d*** or F***, the entrance (*---) of each group is displayed.
(Example) When the power is turned off and then on after a change in the A020 setting, "A---" is displayed.

User Parameter Automatic Setting Function

- When user parameter automatic setting function b039 is set to "01" (enabled), the parameters subjected to a data change are automatically stored in sequence (from U001 to U012). This data can be used as changed data.
- The screen information is stored when the Enter key is pressed. The monitor screens (d***) are also stored in the same manner.
- U001 is the most recent parameter, and U012 is the oldest.
- The same parameter cannot be stored. If the number of parameters stored exceeds 12, the oldest data (U012) is erased.

Parameter No.	Function name	Data	Default setting	Unit
b039	User parameter automatic setting function selection	00: Disabled 01: Enabled	00	—
Related functions		U001 to U012		

Torque Limit Function

- This function limits motor output torque when "03" (sensorless vector control), "04" (0-Hz sensorless vector control), or "05" (sensor vector control) is selected in control method A044/A244.

Parameter No.	Function name	Data	Default setting	Unit
A044/A244	V/f characteristics selection	03: Sensorless vector 04: 0-Hz sensorless vector 05: Sensor vector (A244 is blank.)	00	—
b040	Torque limit selection	00: Four-quadrant separate setting 01: Terminal switch 02: Analog input 03: Option 1 04: Option 2	00	—
b041	Torque limit 1	0. to 200. (0.4 to 55 kW) 0. to 180. (75 to 132 kW) Forward power running under four-quadrant separate setting	150.	%
b042	Torque limit 2	0. to 200. (0.4 to 55 kW) 0. to 180. (75 to 132 kW) Reverse regeneration under four-quadrant separate setting	150.	%
b043	Torque limit 3	0. to 200. (0.4 to 55 kW) 0. to 180. (75 to 132 kW) Reverse power running under four-quadrant separate setting	150.	%
b044	Torque limit 4	0. to 200. (0.4 to 55 kW) 0. to 180. (75 to 132 kW) Forward regeneration under four-quadrant separate setting	150.	%
C001 to C008	Multi-function inputs 1 to 8 selection	40: Torque limit enabled 41: Torque limit switching 1 42: Torque limit switching 2	—	—
C021 to C025	Multi-function output terminal selection	10: During torque limit	—	—
Related functions		A044, A244, C001 to C008		

- You can select any of the following four torque limit functions from torque limit selection b040.
  <Four-quadrant separate setting mode>
  Sets torque limits 1 to 4 (b041 to b044) for four quadrants (forward power running, regeneration, reverse power running, and regeneration).

  <Terminal switching mode>
  Switches over torque limits 1 to 4 (b041 to b044), depending on combinations of torque limit switchings 1 and 2 (TRQ1 and TRQ2) allocated to multi-function inputs. Selected torque limit values are enabled for all operation modes.

  <Analog input mode>
  Sets a torque limit value depending on the voltage applied to terminal FE on the control terminal block. 0 to 10 V correspond to torque limit values of 0% to 200%. Selected torque limit values are enabled for all operation modes.

  <Option (option 1, option 2) mode>
  Enabled when an optional 3G3AX-DI01 board is used. For details, refer to the optional board instruction manual.

- If the torque limit enable function (TL) is set for a multi-function input, the torque limit function set in b040 is enabled only when TL is turned on. When TL is off, the torque limit setting is disabled, and the maximum value is defined as the torque limit value. Unless the torque limit enable function (TL) is set for a multi-function input, the torque limit function set in torque limit selection b040 is always enabled.
- With this function, the torque limit value is set with the Inverter's maximum output current as 200%. This means output torque varies depending on the combination of motors. Note that the torque limit value is not the absolute one.
- When the torque limit signal is selected in the multi-function output selection, the torque limit signal is turned on when the above torque limit function is activated.
- The following figure shows torque limits 1 to 4 with "00" (four-quadrant separate setting) selected in torque limit selection b040.

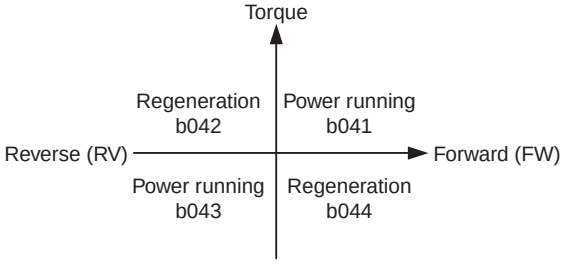

- The following figure shows torque limits 1 to 4 with "01" (terminal switching) selected in torque limit selection b040. They can be switched with torque limit switchings 1 and 2 allocated to multi-function inputs.
  (Example) When torque limit switching 1 (41) and torque limit switching 2 (42) are allocated to multi-function input terminals S7 and S8, respectively

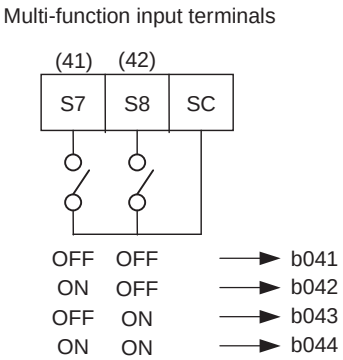

- To use the torque limit function in a low speed range, also use the overload limit function.

Reverse Rotation Prevention Function

- This function is enabled when "03" (sensorless vector control), "04" (0-Hz sensorless vector control), or "05" (sensor vector control) is selected in control method A044/A244.
- Because of the Inverter's control characteristics, the Inverter may output a rotation signal in the direction opposite to that of the RUN command (e.g. in a low-speed range). If the motor's reverse rotation may cause a problem (e.g. damage to the machine driven by the motor), set reverse rotation prevention selection b046 to "enabled".

Parameter No.	Function name	Data	Default setting	Unit
A044/A244	V/f characteristics selection	03: Sensorless vector 04: 0-Hz sensorless vector 05: Sensor vector (A244 is blank.)	00	—
b046	Reverse rotation prevention selection	00: Disabled 01: Enabled	00	—

Torque LADSTOP Function

- If "03" (sensorless vector control), "04" (0-Hz sensorless vector control), or "05" (sensor vector control) is selected in control method A004/A244, this function temporarily stops the frequency deceleration function (LAD) when the torque limit function is activated.

Parameter No.	Function name	Data	Default setting	Unit
A044/A244	V/f characteristics selection	03: Sensorless vector 04: 0-Hz sensorless vector 05: Sensor vector (A344 is blank.)	00	—
b040	Torque limit selection	00: Four-quadrant separate setting 01: Terminal switch 02: Analog input 03: Option 1 04: Option 2	00	—
b041	Torque limit 1	0. to 200. (0.4 to 55 kW) 0. to 180. (75 to 132 kW) Forward power running under four-quadrant separate setting	150.	%
b042	Torque limit 2	0. to 200. (0.4 to 55 kW) 0. to 180. (75 to 132 kW) Reverse regeneration under four-quadrant separate setting		
b043	Torque limit 3	0. to 200. (0.4 to 55 kW) 0. to 180. (75 to 132 kW) Reverse power running under four-quadrant separate setting		
b044	Torque limit 4	0. to 200. (0.4 to 55 kW) 0. to 180. (75 to 132 kW) Forward regeneration under four-quadrant separate setting		
b045	Torque LADSTOP selection	00: Disabled 01: Enabled	00	—

Parameter No.	Function name	Data	Default setting	Unit
C001 to C008	Multi-function inputs 1 to 8 selection	40: Torque limit enabled 41: Torque limit switching 1 42: Torque limit switching 2	—	—

Momentary Power Interruption Non-stop Function

- After the power is shut off during operation, this function decelerates the Inverter to a stop while keeping the voltage below the overvoltage level.
- You can select from three modes in momentary power interruption non-stop selection b050.

Parameter No.	Function name	Data	Default setting	Unit
b050	Selection of non-stop function at momentary power interruption	00: Disabled 01: Enabled 02: DC voltage constant control (without recovery)*5 03: DC voltage constant control (with recovery)*5	00	—
b051	Starting voltage of non-stop function at momentary power interruption *4	0.0 to 1000.	220/440	V
b052	Stop deceleration level of non-stop function at momentary power interruption *1 *4	0.0 to 1000.	360/720	V
b053	Deceleration time of non-stop function at momentary power interruption *3	0.01 to 3600.	1.00	s
b054	Deceleration starting width of non-stop function at momentary power interruption *3	0.00 to 10.00	0.00	Hz
b055	Proportional gain setting of non-stop function at momentary power interruption	0.00 to 2.55: Proportional gain for DC voltage constant control (b050 = 02, 03 only)	0.20	—
b056	Integral time setting of non-stop function at momentary power interruption	0.000 to 9.999/10.00 to 65.53: Integral time for DC voltage constant control (b050 = 02, 03 only)	0.100	s

■Momentary Power Interruption Non-stop Deceleration Stop (b050 = 01)

- After the power is shut off during operation, this function decelerates the Inverter to a stop while keeping the voltage below the momentary power interruption non-stop deceleration level (b052).
- To use this function, remove the J51 connector cable connected between terminals Ro and To, and connect the cable from main terminal P to Ro, and from N to To. The cable size should be 0.75 mm^2 or larger.
- If the power is shut off during operation and the voltage falls below the momentary power interruption non-stop function starting voltage (b051), the frequency deceleration width decreases at the momentary power interruption non-stop deceleration starting width (b054), and then the Inverter decelerates for the momentary power interruption non-stop deceleration time (b053).
- If an overvoltage condition (momentary power interruption non-stop deceleration level b052 or higher) occurs because of regeneration during deceleration, the Inverter is kept in the LAD STOP status until the overvoltage condition is reset.

*1. When the momentary power interruption non-stop deceleration level (b052) < the momentary power interruption non-stop function starting voltage (b051), the Inverter performs this function by increasing the momentary power interruption non-stop deceleration level (b052) to the momentary power interruption non-stop function starting voltage (b051). (The set value will not be changed.)
If b052 is lower than the incoming voltage or equivalent (DC voltage or equivalent after rectification [incoming voltage × $\sqrt{2}$]), the Inverter is brought into the LAD STOP status at power recovery during execution of this function, disabling deceleration. (The Inverter will accept neither a STOP command nor frequency reference change until operation is complete.) Make sure that the b052 setting is higer than the normal incoming voltage or equivalent.

*2. This function is not reset before the operation is complete and stopped. To run the Inverter after power recovery during this function, input the RUN command following the STOP command (RUN command OFF) after a stop condition.

*3. If the momentary power interruption non-stop deceleration starting width (b054) is too large, an overcurrent trip occurs because of rapid deceleration. If b054 is too small, or if the momentary power interruption non-stop deceleration time (b053) is too long, an undervoltage trip occurs because of insufficient regeneration power.

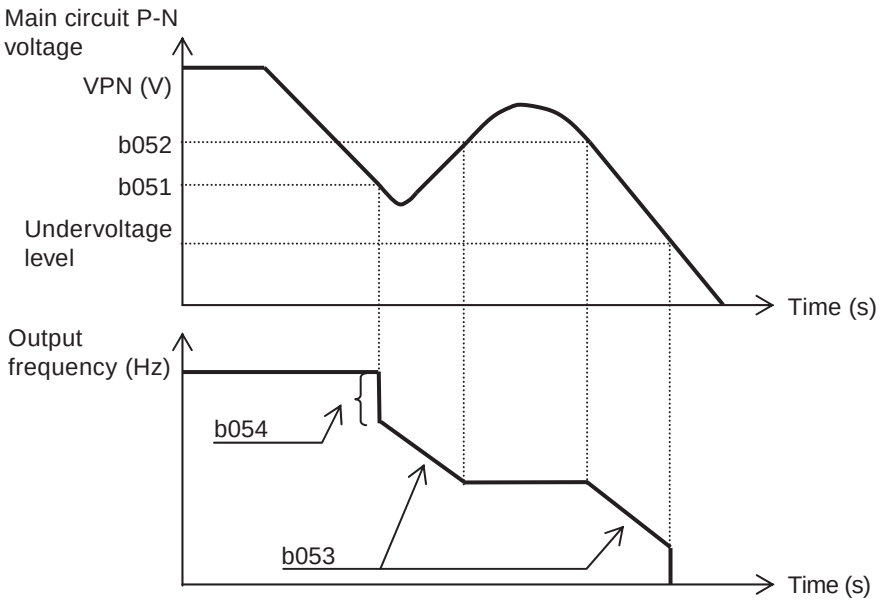

■Momentary Power Interruption Non-stop DC Voltage Constant Control (b050 = 02: without recovery, b050 = 03: with recovery)

- If a momentary power interruption or main circuit DC voltage drop occurs during operation, the Inverter decelerates while keeping the main circuit DC voltage at the value set in momentary power interruption non-stop target voltage (OV-LADSTOP level) b052.
- This function is started when the following conditions are all satisfied:
  - b050 = "02" or "03"
  - The Inverter is running. (This function is disabled during trip/undervoltage/stop.)
  - The control power supply is momentarily interrupted, or the main circuit DC voltage falls below the momentary power interruption non-stop function starting voltage (b051)
- This function is enabled when the above starting conditions are satisfied, even if the J51 connector cable is disconnected from terminals Ro and To and is connected from main terminal P to Ro and from N and To, or even if the control power supply is separated from the main circuit power supply.
- If the time of momentary power interruption is short, the Inverter can continue to run without shutting off the output. However, if undervoltage occurs because of momentary power interruption, the Inverter immediately shuts off the output, and stops operating this function. The subsequent power recovery depends on the setting of retry selection b001.
- With b050 = 03, the Inverter can be restored to normal operation, if a momentary power interruption occurs and incoming voltage recovers before the output is shut off. Note that the Inverter may decelerate to a stop, depending on the b051 setting. Below are the details.

b050	b051	Operation
02 (without recovery)	b052 > Main circuit DC voltage at power recovery	Deceleration stop (DC voltage constant control) (example 1)
	b052 < Main circuit DC voltage at power recovery	Deceleration stop (normal operation) (example 2)
03 (with recovery)	b052 > Main circuit DC voltage at power recovery	Deceleration stop (DC voltage constant control) (example 1)
	b052 < Main circuit DC voltage at power recovery	Operation (normal operation) (example 2)

- If operation of this function results in deceleration stop, the Inverter is forced to stop, even if the FW command is ON. To restart the Inverter, make sure that the incoming voltage has recovered, and input the FW command again.

*4. Make sure that the b051/b052 set values are larger than the undervoltage level (200-V class: 210 V, 400-V class: 410 V). If undervoltage occurs, this function is disabled.
Make sure that b051 is smaller than b052. If the proportional gain setting (b055) is excessively increased when the difference between b051 and b052 is large, the Inverter may accelerate immediately after this function starts, resulting in overcurrent.

*5. When b050 = 02, 03, PI control works to keep the internal DC voltage constant.
- Though quicker response is expected with a larger proportional gain (b055), control tends to be divergent and may easily lead to a trip.
- Response also becomes quicker with a shorter integral time (b056), but if too short, the same situation may occur.
- If the proportional gain (b055) is too small, the voltage drops immediately after this function starts, resulting in an undervoltage trip.

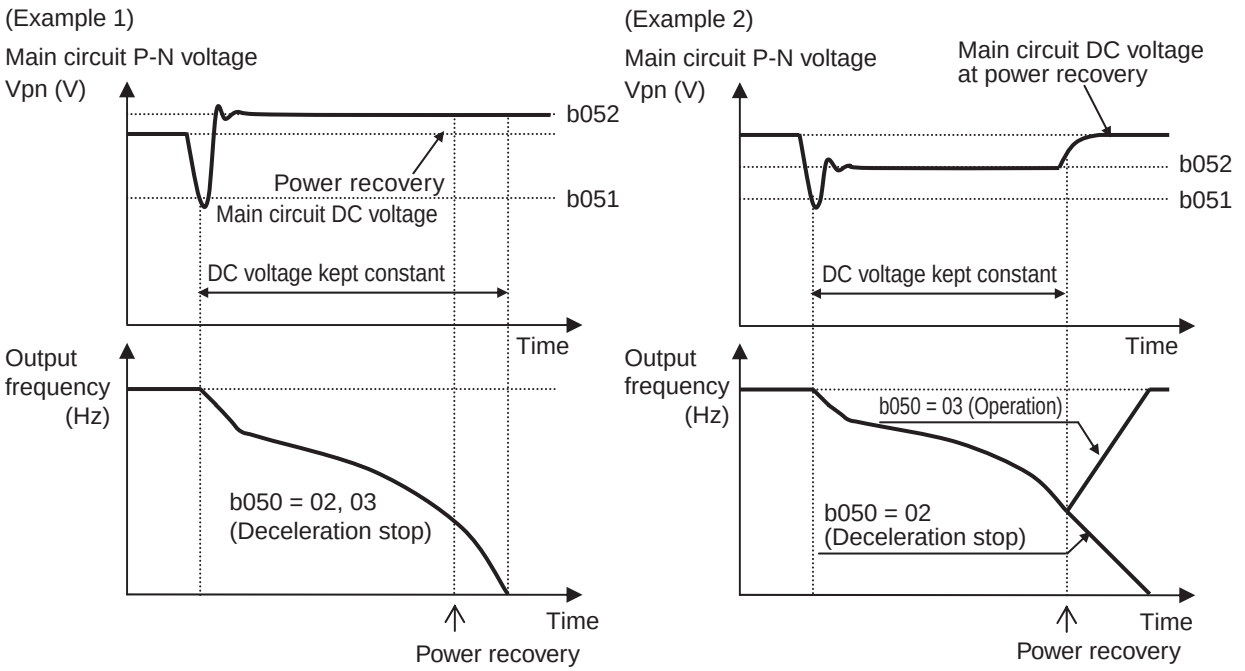

Note: The main circuit DC voltage level, while the function is running, may fall below the b052 set value depending on the proportional gain and integral time settings.

Window Comparator (Disconnection Detection FVDc/FIDc/FEDc)

- The Inverter activates the window comparator output when the FV/FI/FE analog input value is within the upper and lower limit levels of the window comparator. This function allows you to monitor analog input based on the desired level (e.g. to detect a disconnection).

Parameter No.	Function name	Data	Default setting	Unit
C021 to C025	Multi-function output terminals P1 to P5 selection	27: FVDc (analog FV disconnection detection) 28: FIDc (analog FI disconnection detection) 29: FEDc (analog FE disconnection detection) 54: WCFV (window comparator FV) 55: WCFI (window comparator FI) 56: WCFE (window comparator FE)	—	—
C026	Relay output (MA, MB) function selection		05	
b060 (FV)	Window comparator FV/FI/FE upper limit level	Set an upper limit level. Setting range: 0 to 100 Lower limit: Lower limit level + Hysteresis width × 2	100	%
b063 (FI)				
b066 (FE)		Set an upper limit level. Setting range: -100 to 100 Lower limit: Lower limit level + Hysteresis width × 2		

Parameter No.	Function name	Data	Default setting	Unit
b061 (FV) b064 (FI)	Window comparator FV/FI/FE lower limit level	Set a lower limit level. Setting range: 0 to 100 Upper limit: Upper limit level - Hysteresis width × 2	0	%
b067 (FE)		Set a lower limit level. Setting range: -100 to 100 Upper limit: Upper limit level - Hysteresis width × 2	-100	%
b062 (FV) b065 (FI) b068 (FE)	Window comparator FV/FI/FE hysteresis width	Set a hysteresis width for the upper and lower limit levels. Setting range: 0 to 10 Upper limit: (Upper limit level - Lower limit level) × 2	0	%
b070 (FV) b071 (FI)	Analog operation level at FV/FI/FE disconnection	0 to 100/no (ignored): Set an analog input application value used for WCFV/WCFI/WCFE (FVDc/FIDc/FEDc) output.	no	—
b072 (FE)		-100 to 100/no (ignored): Set an analog input application value used for WCFV/WCFI/WCFE (FVDc/FIDc/FEDc) output.		

- You can set hysteresis widths for the window comparator upper and lower limit levels.
- You can set limit levels and a hysteresis width individually for FV, FI, and FE inputs.
- For the WCFV/WCFI/WCFE output, you can fix the analog input application value to the desired value. Set values in FV/FI/FE disconnection operation levels b070/b071/b072. If "no" is set, the analog input value is directly reflected.
- FVDc/FIDc/FEDc outputs are the same as WCFV/WCFI/WCFE, respectively.

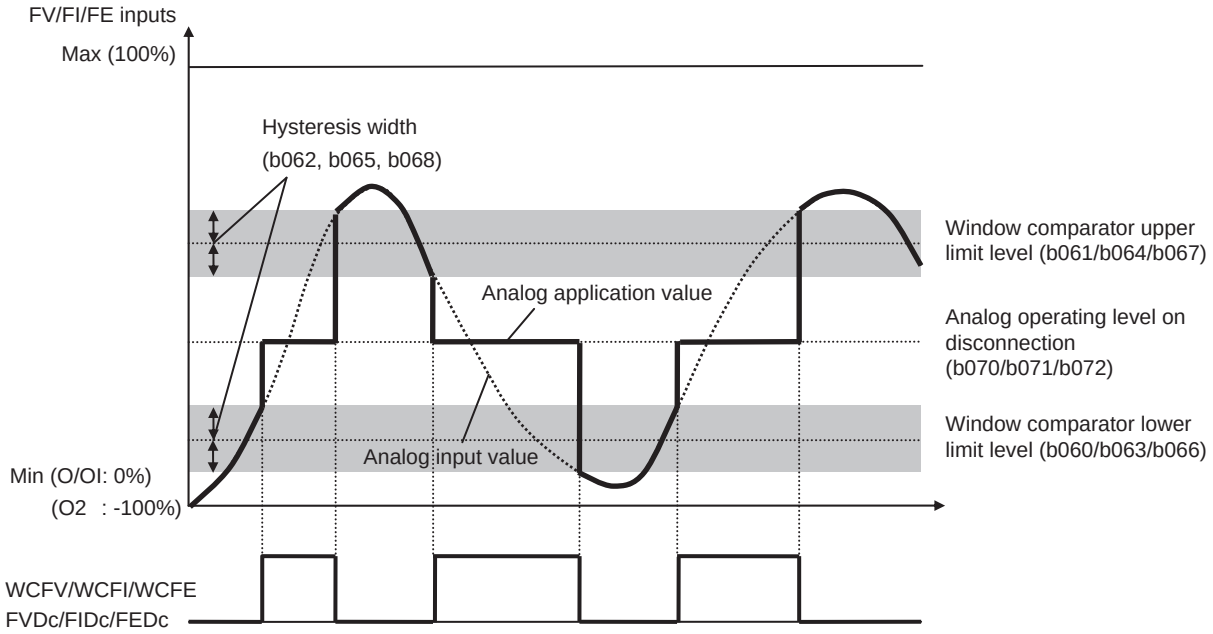

Starting Frequency

•Set the frequency for starting Inverter output when the RUN signal is turned on.

Parameter No.	Function name	Data	Default setting	Unit
b082	Starting frequency	0.10 to 9.99	0.50	Hz

•Use mainly to adjust the starting torque.
•With starting frequency b082 set high, the starting current increases, possibly causing the current to exceed the overload limit and overcurrent protection to work to trip the Inverter.
•If "04" (OSLV: 0-Hz sensorless vector control) or "05" (V2: sensor vector control) is selected in control method selection A044, this function is disabled.

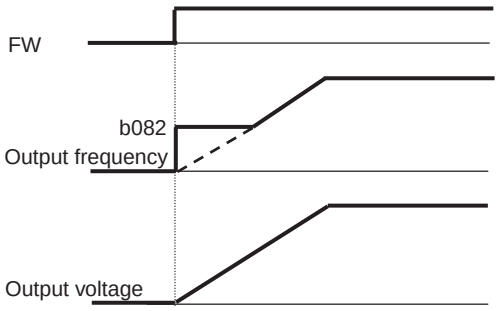

Carrier Frequency

•You can change the PWM waveform carrier frequency output from the Inverter.

Parameter No.	Function name	Data	Default setting	Unit
b083	Carrier frequency	0.5 to 15.0 (0.4 to 55 kW)	5.0	kHz
		0.5 to 10.0 (75 to 132 kW)	3.0	

•With the carrier frequency set high, you can reduce metallic noise from the motor. However, this increases noise or leakage current from the Inverter.
•Helps avoid mechanical or motor resonance.
•The maximum carrier frequency varies depending on the capacity.
To raise the carrier frequency (fc), derate the output current as shown in the following table.
•Set a derating output current value as electronic thermal level.
(If the existing electronic thermal value is lower than the derating value, the above setting is not required.)
For details on the electronic thermal function, refer to page 4-46.
•To raise the carrier frequency, reduce the output current (or derate the rated current) as shown in the graph below.

Voltage	200-V class		400-V class	
Capacity	Max. fc (kHz)	Derating at fc = 15 kHz	Max. fc (kHz)	Derating at fc = 15 kHz (75 to 132 kW is for 10 kHz)
0.4 kW	15	100%	15	100%
0.75 kW	15	100%	15	100%
1.5 kW	15	100%	15	100%
2.2 kW	15	100%	15	100%
3.7 kW	15	100%	15	100%

Voltage	200-V class		400-V class	
Capacity	Max. fc (kHz)	Derating at fc = 15 kHz	Max. fc (kHz)	Derating at fc = 15 kHz (75 to 132 kW is for 10 kHz)
5.5 kW	15	100%	15	100%
7.5 kW	15	100%	15	100%
11 kW	12	90% (41.4 max.)	15	100%
15 kW	12	95% (60.8 A max.)	14	95% (30.4 A max.)
18.5 kW	10	90% (68.4 A max.)	10	90% (34.2 A max.)
22 kW	7	70% (66.5 A max.)	6	75% (36.0 A max.)
30 kW	5	80% (96.8 A max.)	10	75% (43.5 A max.)
37 kW	10	75% (108.7 A max.)	8	80% (60.0 A max.)
45 kW	5	70% (127.4 A max.)	9	75% (68.2 A max.)
55 kW	5	70% (154 A max.)	6	60% (67.2 A max.)
75 kW	—	—	6	85% (126.7 A max.)
90 kW	—	—	4	75% (132.0 A max.)
110 kW	—	—	6	70% (151.9 A max.)
132 kW	—	—	3	60% (156.0 A max.)

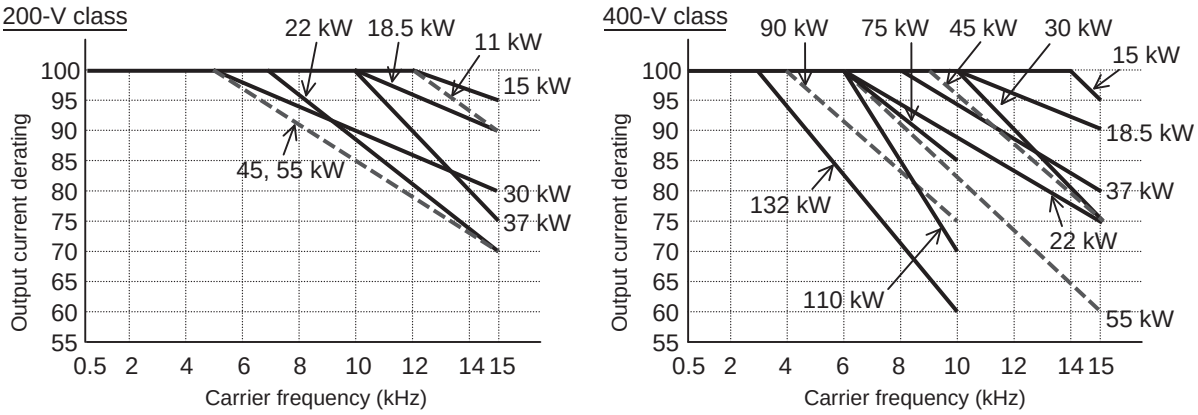

- If the above maximum rated carrier frequency and the derating value at 15 kHz are exceeded, the Inverter may be damaged and/or the service life may be shortened.

Parameter Initialization

- You can initialize the rewritten set values and reset to the factory default.
- You can clear trip data.
- You cannot clear the P100 to P131 set values, RUN time, or power ON time.

Parameter No.	Function name	Data	Default setting	Unit
b084	Initialization selection	00: Clears the trip monitor 01: Initializes data 02: Clears the trip monitor and initializes data	00	—
b085	Initialization parameter selection	00: Do not change	00	—

■Initialization Method

After setting the above parameter, use the following method to initialize.

(1) Press the STOP/RESET key with the Mode and Decrement keys pressed simultaneously.
- Release the STOP/RESET key when the display blinks.
  (The display changes as shown below.)
- Release the Mode and Decrement keys.

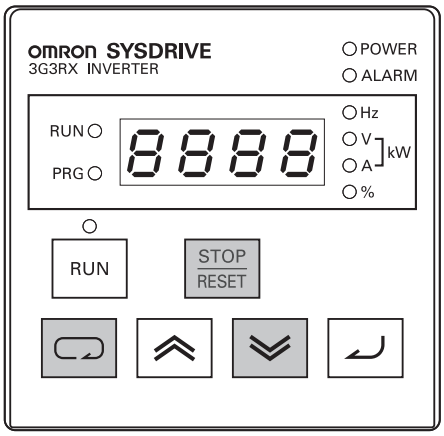

(2) Initializing

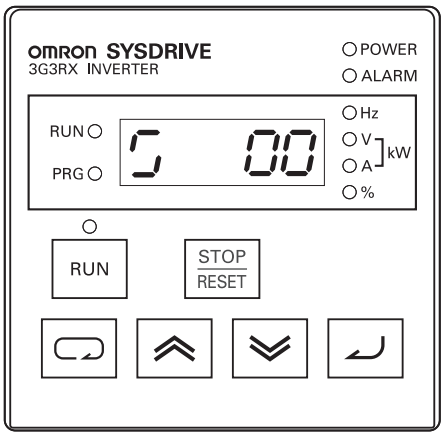

(3) Initialization completes when "d001" appears on the monitor.
Check that the data is initialized.

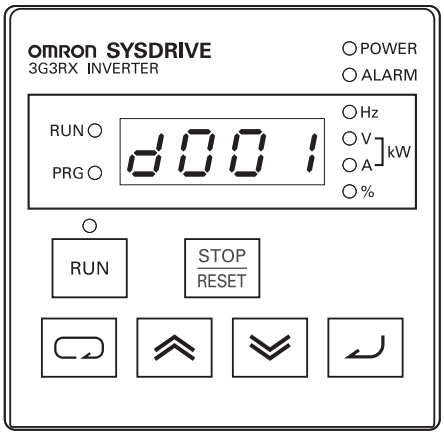

Note: You cannot initialize analog input adjustments C081, C082, C083, C121, C122, and C123, as well as thermistor adjustment C085.

STOP Key Selection

- When "control circuit terminal block" is selected for the RUN command, you can set whether the STOP/RESET key on the Digital Operator is used to activate the STOP command and trip reset operation.
- This setting is enabled when any item other than "02" (Digital Operator) is selected in RUN command selection A002. (Refer to "RUN Command Selection" (page 4-11).)
  If "02" (Digital Operator) is selected in A002, the STOP command and trip reset operation are enabled regardless of this setting.

Parameter No.	Function name	Data	Default setting	Unit
b087	STOP key selection	00: Enabled 01: Disabled 02: Disabled only during stop	00	—

Data	STOP command via the STOP/ RESET key on the Digital Operator	Trip reset operation via the STOP/ RESET key on the Digital Operator
00	Enabled	Enabled
01	Disabled	Disabled
02	Disabled	Enabled

Stop Selection

- You can set whether the Inverter decelerates to a stop for the set deceleration time or goes into free-run status, when the STOP command is input from the Digital Operator or the control circuit terminal block.
- If the RUN command is input again during free running, the Inverter restarts according to free-run stop selection b088. (Refer to "Free-run Stop Selection" (page 4-69).)

Parameter No.	Function name	Data	Default setting	Unit
b091	Stop selection	00: Deceleration → Stop 01: Free-run stop	00	—
b088	Free-run stop selection	00: 0-Hz start 01: Frequency matching start 02: Frequency pull-in restart	00	—
b003	Retry wait time	0.3 to 100.	0.00	Hz
b007	Frequency matching lower limit frequency setting	0.00 to 400.0	1.0	s
Related functions		F003, F203, F303		

Free-run Stop Selection

- Activating the free-run stop (FRS) function shuts off the Inverter output, letting the motor go into free-run status.

Parameter No.	Function name	Data	Default setting	Unit
b088	Free-run stop selection	00: 0-Hz start (example 1) 01: Frequency matching start (example 2) 02: Frequency pull-in restart (example 3)	00	—
b003	Retry wait time	0.3 to 100: Time before restart	1.0	s
b007	Frequency matching lower limit frequency setting	0.00 to 400.0: Set a frequency matching level.	0.00	Hz
b028	Frequency pull-in restart level	0.20 × Rated current to 2.00 × Rated current	Rated current	A
b029	Frequency pull-in restart parameter	0.10 to 30.00	0.50	s
b030	Starting frequency at frequency pull-in restart	00: Frequency at interruption 01: Max. frequency 02: Set frequency	00	—

- Helps stop the motor using a mechanical brake such as an electromagnetic one.
  Note that an overcurrent trip may occur if the mechanical brake forces the motor to stop during Inverter output.
- Allocate 11 (FRS) to any of multi-function inputs 1 to 8 (C001 to C008).
- Performs a free-run stop (FRS) while the FRS terminal is turned on.
  When the FRS terminal is turned off, the motor restarts after the retry wait time (b003) elapses. However, if RUN command selection A002 is set to "02" (Digital Operator), the Inverter does not restart.
  To restart the Inverter, input the RUN command.
- You can select as the Inverter output mode for restart a 0-Hz start, frequency matching start or frequency pull-in restart at free-run stop selection b088. (Examples 1, 2, 3)
- If you set frequency matching lower limit frequency setting b007, the Inverter restarts at 0 Hz, when the Inverter detects a frequency equal to or lower than this setting during frequency matching start.
- The setting of this function is applied to the FRS terminal, and also to the status when the Inverter is reset from free running.

(Example 1) 0-Hz start

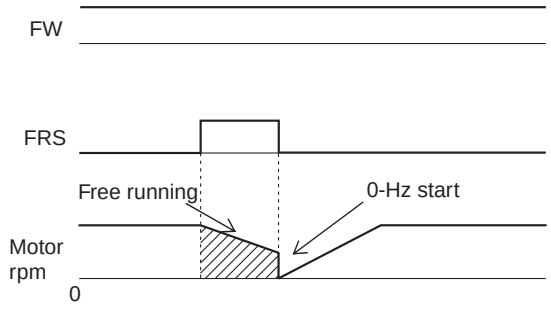

- The Inverter starts running at 0 Hz regardless of the motor rpm. The retry wait time is ignored at 0-Hz start.
- If the Inverter starts running at 0 Hz with the motor rpm high, an overcurrent trip may occur.

(Example 2): Frequency matching start

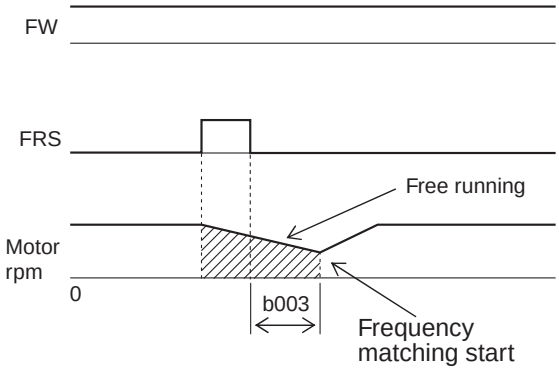

- When the FRS terminal is turned off and the retry wait time elapses, the motor frequency is matched and a frequency pull-in starts without stopping the motor. If an overcurrent trip occurs at frequency matching start, extend the retry wait time.
- Even if "frequency matching start" is selected, the Inverter may start at 0 Hz when:
  - The output frequency is equal to or lower than 1/2 of the base frequency
  - The motor induction voltage quickly attenuates
  - The Inverter detects a frequency equal to or lower than the frequency matching lower limit frequency setting (b007)

(Example 3) Frequency pull-in restart

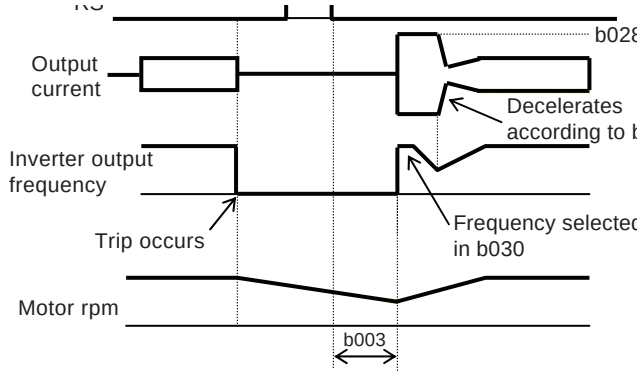

- After the retry wait time (b003) elapses, the Inverter starts output from the b030 set value. The Inverter then decelerates according to b029, while keeping the output current at the b028 set value.
- When the frequency matches the voltage, the Inverter accelerates again, and then output frequency is restored to the original level.
- If an overcurrent trip occurs under this method, reduce the b028 set value.

Automatic Carrier Frequency Reduction Function

- This function automatically reduces carrier frequency according to an increase in output current.
- This function is enabled when automatic carrier frequency reduction selection b089 is set to "01".

Parameter No.	Function name	Data	Default setting	Unit
b089	Automatic carrier reduction	00: Disabled 01: Enabled	00	—

- When output current exceeds 60%, 72%, 84% and 96% of the rated current, the carrier frequency is reduced to 12, 9, 6, and 3 kHz, respectively.
  When the output current falls below -5% of each level, this function will be reset.

Carrier frequency reduction starting level (Recovery level)	Reduced carrier frequency (kHz)
Less than 60% of the rated current	15.0
60% (55%) of the rated current	12.0
72% (67%) of the rated current	9.0
84% (79%) of the rated current	6.0
96% (91%) of the rated current	3.0

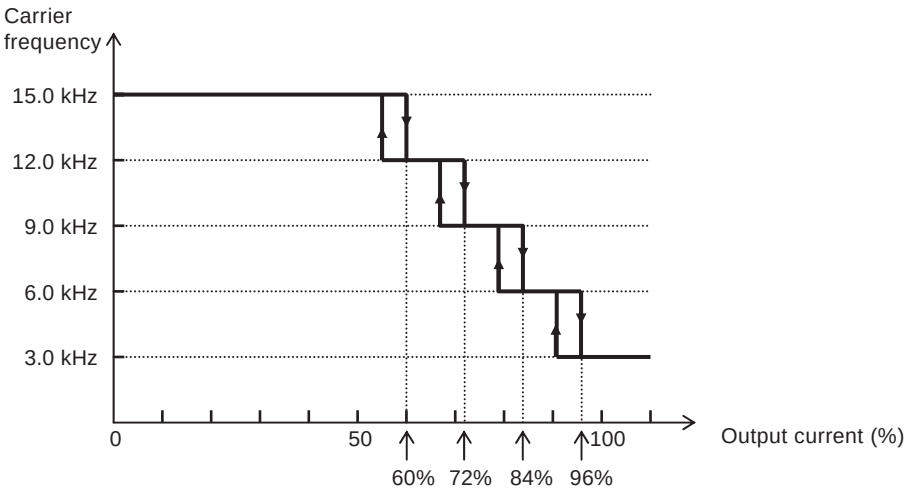

- The carrier frequency reduction rate is 2 kHz per second.
- The upper limit of carrier frequency variable with this function conforms to the set value of carrier frequency b083, and the lower limit is 3 kHz.
  Note: When b083 is 3 kHz or lower, this function is disabled regardless of the b089 setting.

Regenerative Braking Function

- This function applies to the Inverter models with a built-in regenerative braking circuit (3G3RX-A2220/A4220 or lower models).
- With the built-in regenerative braking circuit, this function allows an external braking resistor to consume the motor's regeneration energy as heat.
  This function is useful for a system in which the motor works as a generator when it is rapidly decelerated.
- To use this function, configure the following settings.

Parameter No.	Function name	Data	Default setting	Unit
b090	Usage rate of regenerative braking function	0.0: Does not operate. 0.1 to 100.0: A regenerative braking usage rate for 100 seconds can be set, in increments of 0.1%. If the set usage rate is exceeded, a braking resistor overload trip (E06) occurs. 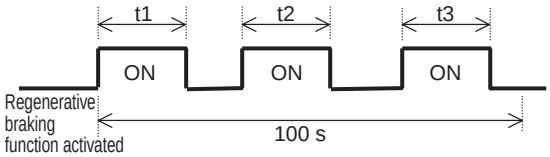 $\text{Usage rate (\%)} = \frac{(t1 + t2 + t3)}{100\ \text{s}} \times 100$	0.0	%
b095	Regenerative braking function operation selection	00: Disabled (This function is not active.) 01: Enabled during operation (This function is active.) Disabled during stop (This function is not active.) 02: Enabled during both operation and stop (This function is active.)	0.0	—
b096	Regenerative braking function ON level	200-V class: 330 to 380 * 400-V class: 660 to 760 * (Inverter DC voltage)	200-V class: 360 V 400-V class: 720 V	V

* The regenerative braking function ON level conforms to the voltage setting for the Inverter's internal converter (DC unit).

Cooling Fan Control

- You can set whether to operate the Inverter's cooling fan constantly or only during Inverter operation.

Parameter No.	Function name	Data	Default setting	Unit
b092	Cooling fan control	00: Always ON 01: ON during RUN Regardless of the settings, the cooling fan operates for 5 minutes after power-on, and for 5 minutes after the Inverter stops.	01	—

Note: If a momentary power interruption occurs or the power is shut off while the cooling fan is in operation, the cooling fan stops temporarily and restarts automatically after power recovery.

External Thermistor (TH)

- This function enables thermal protection of the external equipment (e.g. motor) if its internal thermistor is connected to the Inverter.

Parameter No.	Function name	Data	Default setting	Unit
b098	Thermistor selection	00: Disabled 01: Enabled, Positive temperature coefficient resistance element (PTC) 02: Enabled, Negative temperature coefficient resistance element (NTC)	00	—
b099	Thermistor error level	0 to 9999.: Set a temperature resistance value to trip the Inverter, according to the specifications of your thermistor.	3000.	Ω
C085	Thermistor adjustment	0.0 to 1000.: Used for gain adjustment.	Factory default	—

Note: If thermistor selection b098 is set to "01" without connecting an external thermistor, the Inverter trips.

- Connect an external thermistor between control terminals TH and SC.
- Set the following functions according to the specifications of your thermistor.
- When this function is used, keep the cable length between the motor and Inverter within 20 m. Since the current flowing through the thermistor is weak, you must take measures to prevent noise due to motor current. (For example, place the thermistor cable away from the motor cable.)

Brake Control Function

- This function allows the Inverter to control the external brake of equipment, including an elevating system. When brake control selection b120 is set to "01" (enabled), the Inverter operates as follows:

(1) At RUN command input, the Inverter starts output, and accelerates to the release frequency.
(2) After the release frequency is reached, the Inverter outputs the brake release signal (BRK) after the brake release establishment wait time (b121) elapses. However, if the Inverter's output current is less than the current value set in release current b126, the Inverter does not output the brake release signal. In this case, the Inverter trips, and outputs the brake error signal (BER).
(3) If the brake confirmation signal (BOK) is allocated to a multi-function input (when "44" is set in any of C001 to C008), the Inverter waits for the brake confirmation signal for the period set in brake confirmation wait time b124 without accelerating, after the brake release signal is output. If the brake confirmation signal does not turn on within the period set in b124, the Inverter outputs the brake error signal (BER), resulting in trip. If the brake confirmation signal is not allocated to a multi-function input, brake confirmation wait time b124 is disabled, and the Inverter performs processing (4) after the brake release signal is output.
(4) After the brake confirmation signal is input (or after the brake release signal is output if BOK is not selected), the Inverter restarts acceleration up to a set frequency after the period set in acceleration wait time b122 elapses.
(5) After the RUN command is turned off, the Inverter decelerates to the brake release frequency (b125), and turns off the brake release signal (BRK).

(6) If the brake confirmation signal (BOK) is allocated to a multi-function input (when "44" is set in any of C001 to C008), the Inverter waits for the brake confirmation signal to be turned off for the period set in brake confirmation wait time b124 without decelerating, after the brake release signal is turned off. If the brake confirmation signal is not turned off within the period set in b124, the Inverter outputs the brake error signal (BER), resulting in trip. If the brake confirmation signal is not allocated to a multi-function input, brake confirmation wait time b124 is disabled, and the Inverter performs processing (7) after the brake release signal is turned off.

(7) After the brake confirmation signal is turned off (or after the brake release signal is turned off if BOK is not selected), the Inverter restarts deceleration down to 0 Hz after the period set in stop wait time b123 elapses.

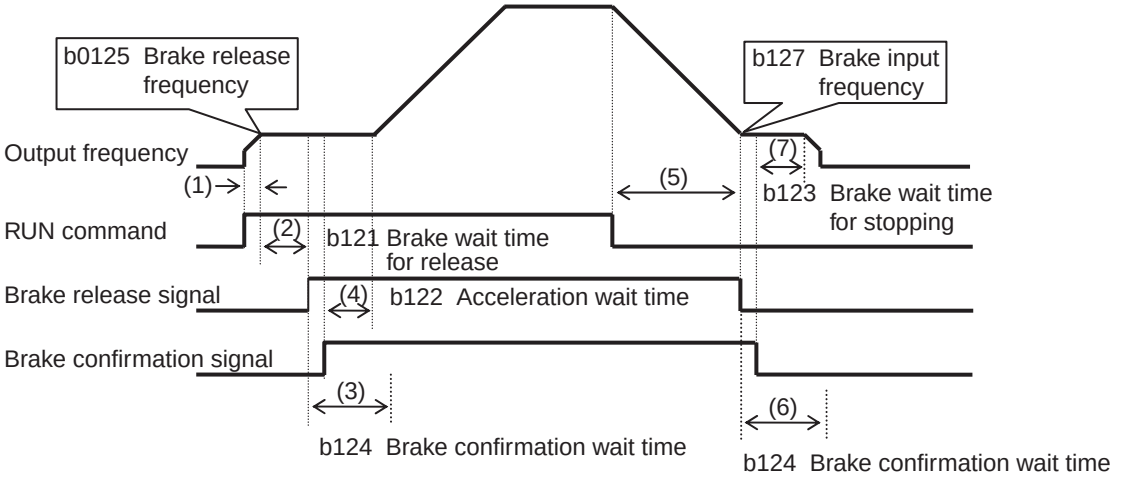

Note: The above operation chart applies to a case where the brake confirmation signal (44: BOK) is selected for any of multi-function inputs 1 to 8 (C001 to C008). If BOK is not selected, the acceleration wait time (b122) starts at the brake release signal ON timing. The stop wait time (b123) starts at the brake release signal OFF timing.

- To use the brake control function, allocate the following functions to multi-function I/O terminals, as required.
  - To input a brake release signal from an external brake to the Inverter, allocate the brake confirmation signal (44: BOK) to any of multi-function inputs 1 to 8 (C001 to C008).
  - Allocate the brake release signal (19: BRK) to any of multi-function output terminals P1 to P5 (C021 to C025). Also, to use a brake error output signal, allocate the brake error signal (20: BER).

- To use the brake control function, you are recommended to select "sensorless vector control" (A044 = 03), "0-Hz sensorless vector control" (A044 = 04), or "sensor vector control" (A044 = 05) so that the Inverter outputs high torque during startup. (Refer to page 4-21.)

Parameters Required for Brake Control Function

Parameter No.	Function name	Data	Default setting	Unit
b120	Brake control selection	00: Disabled 01: Enabled	00	—
b121	Brake wait time for release	0.00 to 5.00: Set a time required for the output current to reach the rate of the release current after reaching the release frequency.	0.00	s
b122	Brake wait time for acceleration	0.00 to 5.00: Set a mechanical delay time from when the release signal is output until the brake is released.	0.00	s
b123	Brake wait time for stopping	0.00 to 5.00: Set a mechanical delay time from when the release signal is turned off until the brake is closed.	0.00	s
b124	Brake wait time for confirmation	0.00 to 5.00: Set a wait time longer than the time from when the release signal is released until the brake outputs the release completion signal to the Inverter.	0.00	s
b125	Brake release frequency	0.00 to 99.99/100.0 to 400.0 (Hz): Set a frequency to output the brake release signal. *1	0.00	Hz
b126	Brake release current	0 × Rated current to 2.0 × Rated current: Set an output current that allows the brake to be released. *2	Rated current	—
b127	Brake input frequency	0.00 to 99.99/100.0 to 400.0: Set a frequency to close the brake during stop. *1	0.00	Hz
Related functions		C001 to C008, C021 to C025		

*1. Set a brake release frequency higher than the starting frequency (b082).

*2. If the set current is too low, sufficient torque may not be provided when the brake is released.

In any of the following cases, the Inverter trips and outputs the brake error signal (BER). (Brake error: E36)

- The output current is lower than the release current after the brake release establishment wait time (b121) elapses.
- When the brake confirmation (BOK) signal is used, the brake confirmation signal does not turn on within the brake confirmation wait time (b124) during acceleration, or does not turn off within the brake confirmation wait time (b124) during deceleration; or the brake confirmation signal turns off, although the brake release signal is output.

Overvoltage Protection Function During Deceleration

- This function helps avoid an overvoltage trip due to regenerative energy from the motor during deceleration.
- You can set whether to enable or disable this function with overvoltage protection function selection during deceleration b130.
- If overvoltage protection function selection b130 is set to "01" (enabled: DC voltage constant control), the Inverter automatically decelerates while keeping the main circuit DC voltage rise due to deceleration start at the overvoltage protection function level setting (b131).
- If overvoltage protection function selection b130 is set to "02" (enabled: with acceleration), the main circuit DC voltage increases because of deceleration start. When the main circuit DC voltage exceeds the overvoltage protection function level setting (b131), the Inverter starts acceleration according to the setting of overvoltage protection parameter b132. After that, when the main circuit DC voltage falls below the b131 level, the Inverter starts deceleration again.

Parameter No.	Function name	Data	Default setting	Unit
b130	Overvoltage protection function selection during deceleration	00: Disabled 01: Enabled (DC voltage constant control) (example 1) *2 02: Enabled (with acceleration) (example 2)	00	—
b131	Overvoltage protection level during deceleration *1	200-V class: 330 to 390 400-V class: 660 to 780	380/760	V
b132	Overvoltage protection parameter	0.10 to 30.00: Set the acceleration rate applied when this function is enabled.	1.00	s
b133	Overvoltage protection proportional gain setting	0.00 to 2.55: Proportional gain for DC voltage constant control (b130 = 01 only)	0.50	—
b134	Overvoltage protection integral time setting	0.000 to 9.999/10.00 to 65.53: Integral time for DC voltage constant control (b130 = 01 only)	0.060	s

(Example 1) When b130 = 01

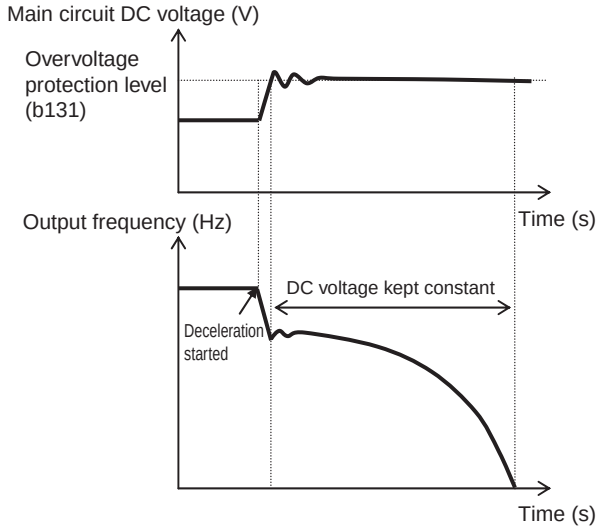

(Example 2) When b130 = 02

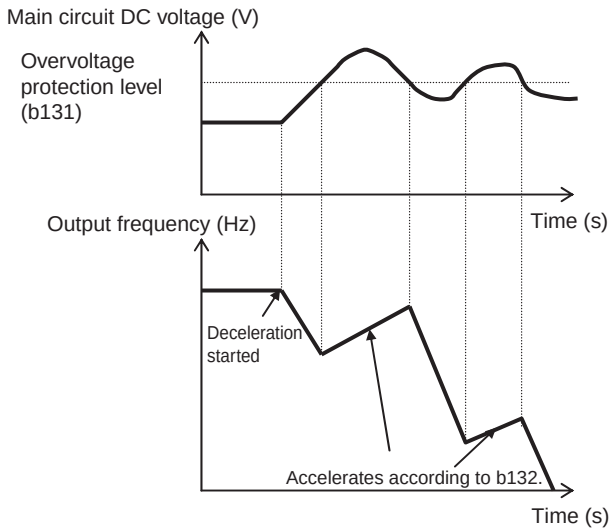

Note 1: With this function enabled, the actual deceleration time may be longer than the set value. Particularly with b130 = 02, if b131 is set too low, the Inverter may not decelerate.

Note 2: Even if this function is enabled, an overvoltage trip may occur depending on the deceleration rate and load condition.
Note 3: When using this function, the Inverter may reduce frequency depending on the moment of inertia of motor load, and takes a long time to stop.
*1. If the b131 set value is lower than the incoming voltage or equivalent, the motor may not be stopped.
*2. When b130 = 01, PI control works to keep the internal DC voltage constant.
- Though quicker response is expected with a larger proportional gain (b133), control tends to be divergent and may easily lead to a trip.
- Response also becomes quicker with a shorter integral time (b134), but if too short, the same situation may occur.

<Group C: Multi-function Terminal Function>

The 3G3RX has eight input terminals [S1], [S2], [S3], [S4], [S5], [S6], [S7], and [S8]; five open collector output terminals [P1], [P2], [P3], [P4], and [P5]; one relay output terminal [MA] and [MB] (SP-DT contact); two analog output terminals [AM] and [AMI]; as well as one digital output terminal [MP].

Multi-function Input Selection

- You can use the following functions by allocating them to any of multi-function inputs S1 to S8. To allocate the functions, set the following data in C001 to C008. For example, C001 corresponds to input terminal S1.
- The same two functions cannot be allocated to the multi-function input terminals. If you attempt to allocate the same two functions to the terminals by mistake, the terminal where you allocated the function last takes precedence. The previous data is set to "no (no allocation)", and the terminal function is disabled.
- After allocating functions to terminals S1 to S8, make sure that the function settings have been stored.

Parameter No.	Data	Function name	Reference item	Page
C001 to C008	01	RV : Reverse command	RUN command	—
	02	CF1 : Multi-step speed setting binary 1	Multi-step speed operation function	4-16
	03	CF2 : Multi-step speed setting binary 2		
	04	CF3 : Multi-step speed setting binary 3		
	05	CF4 : Multi-step speed setting binary 4	Multi-step speed operation function	4-16
	06	JG : Jogging	Jogging operation	4-18
	07	DB : External DC injection braking	DC injection braking (external DC injection braking)	4-24
	08	SET : 2nd control	2nd/3rd control function	4-80
	09	2CH : 2-step acceleration/deceleration	2-step acceleration/deceleration function	4-37
	11	FRS : Free-run stop	Free-run stop	4-69
	12	EXT : External trip	External trip	4-82
	13	USP : USP function	Power recovery restart prevention function	4-82
	14	CS : Commercial switch	Commercial switch	4-83

Parameter No.	Data	Function name	Reference item	Page
C001 to C008	15	SFT : Soft lock	Soft lock	4-51
	16	AT : Analog input switching	External analog input	4-12
	17	SET3 : 3rd control	2nd/3rd control function	4-80
	18	RS : Reset	Reset	4-85
	20	STA : 3-wire start	3-wire input function	4-86
	21	STP : 3-wire stop		
	22	F/R : 3-wire forward/reverse		
	23	PID : PID enabled/disabled	PID function	4-31
	24	PIDC : PID integral reset		
	26	CAS : Control gain switching	Control gain switching	4-87
	27	UP : UP/DWN function accelerated	UP/DOWN function	4-88
	28	DWN : UP/DWN function decelerated		
	29	UDC : UP/DWN function data clear		
	31	OPE : Forced operator	Forced operator function	4-89
	32	SF1 : Multi-step speed setting bit 1	Multi-step speed operation function	4-16
	33	SF2 : Multi-step speed setting bit 2		
	34	SF3 : Multi-step speed setting bit 3		
	35	SF4 : Multi-step speed setting bit 4		
	36	SF5 : Multi-step speed setting bit 5		
	37	SF6 : Multi-step speed setting bit 6		
	38	SF7 : Multi-step speed setting bit 7		
	39	OLR : Overload limit switching	Overload limit	4-49
	40	TL : Torque limit enabled	Torque limit function	4-57
	41	TRQ1 : Torque limit switching 1		
	42	TRQ2 : Torque limit switching 2		
	43	PPI : P/PI switching	P/PI switching function	4-89
	44	BOK : Brake confirmation	Brake control function	4-73
	45	ORT : Orientation	Orientation function	4-129
	46	LAC : LAD cancel	LAD cancel function	4-9
	47	PCLR : Position deviation clear	V2 control mode selection	4-119
	48	STAT : Pulse train position command input permission		
	50	ADD : Frequency addition	Set frequency addition function	4-41
	51	F-TM : Forced terminal block	Forced terminal function	4-90
	52	ATR : Torque command input permission	Torque control	4-121
	53	KHC : Integrated power clear	Integrated power	4-4
	54	SON : Servo ON	Servo ON function	4-137

Parameter No.	Data	Function name	Reference item	Page
C001 to C008	55	FOC : Preliminary excitation	Preliminary excitation function	4-116
	56	Not used		—
	57	Not used		
	58	Not used		
	59	Not used		
	60	Not used		
	61	Not used		
	62	Not used		
	63	Not used		
	65	AHD : Analog command held	Analog command held	4-91
	66	CP1 : Position command selection 1	Absolute position control mode	4-133
	67	CP2 : Position command selection 2		
	68	CP3 : Position command selection 3		
	69	ORL : Zero return limit signal		—
	70	ORG : Zero return startup signal		
	71	FOT : Forward driving stop		4-136
	72	ROT : Reverse driving stop		
	73	SPD : Speed/Position switching		4-134
	74	PCNT : Pulse counter	Multi-function pulse counter	4-91
	75	PCC : Pulse counter clear		
	no	NO : No allocation	—	—

• You can select NO- or NC-contact input for each multi-function input terminal.

Parameter No.	Function name	Data	Default setting	Unit
C011 to C018	Multi-function input operation selection	00: NO contact 01: NC contact • You can set NO- and NC-contact inputs individually for multi-function input terminals S1 to S8 and the FW terminal. • NO contact: "ON" with the contact closed, "OFF" with the contact open. • NC contact: "ON" with the contact open. "OFF" with the contact closed. • A terminal with reset (RS) setting functions as NO contact only.	00	—
C019	FW terminal operation selection		00	—
Related functions		C001 to C008		

2nd/3rd Control Function

• You can switch between three motors to control the Inverter by allocating 08 (SET)/17 (SET3) to any of multi-function inputs 1 to 8 (C001 to C008) and then turning on/off the SET/SET3 terminal.

Parameter No.	Function name	Data	Default setting	Unit
C001	Multi-function input 1 selection *1	01: RV (reverse) 02: CF1 (multi-step speed setting binary 1) 03: CF2 (multi-step speed setting binary 2) 04: CF3 (multi-step speed setting binary 3) 05: CF4 (multi-step speed setting binary 4) 06: JG (jogging) 07: DB (external DC injection braking) 08: SET (2nd control) 09: 2CH (2-step acceleration/deceleration) 11: FRS (free-run stop) 12: EXT (external trip) 13: USP (USP function) 14: CS (commercial switching) 15: SFT (soft lock) 16: AT (analog input switching) 17: SET3 (3rd control) 18: RS (reset) 20: STA (3-wire start) 21: STP (3-wire stop) 22: F/R (3-wire forward/reverse) 23: PID (PID enabled/disabled) 24: PIDC (PID integral reset) 26: CAS (control gain switching) 27: UP (UP/DWN function accelerated) 28: DWN (UP/DWN function decelerated) 29: UDC (UP/DWN function data clear) 31: OPE (forced operator) 32: SF1 (multi-step speed setting bit 1) 33: SF2 (multi-step speed setting bit 2) 34: SF3 (multi-step speed setting bit 3) 35: SF4 (multi-step speed setting bit 4) 36: SF5 (multi-step speed setting bit 5) 37: SF6 (multi-step speed setting bit 6) 38: SF7 (multi-step speed setting bit 7) 39: OLR (overload limit switching) 40: TL (torque limit enabled) 41: TRQ1 (torque limit switching 1) 42: TRQ2 (torque limit switching 2) 43: PPI (P/PI switching) 44: BOK (brake confirmation) 45: ORT (orientation) 46: LAC (LAD cancel) 47: PCLR (position deviation clear) 48: STAT (pulse train position command input permission) 50: ADD (frequency addition) 51: F-TM (forced terminal) 52: ATR (torque command input permission) 53: KHC (integrated power clear) 54: SON (servo ON) 55: FOC (preliminary excitation) 56: Not used 57: Not used 58: Not used 59: Not used 60: Not used 61: Not used 62: Not used 63: Not used 65: AHD (analog command held) 66: CP1 (position command selection 1) 67: CP2 (position command selection 2) 68: CP3 (position command selection 3) 69: ORL (zero return limit signal) 70: ORG (zero return startup signal) 71: FOT (forward driving stop) 72: ROT (reverse driving stop) 73: SPD (speed/position switching) 74: PCNT (pulse counter) 75: PCC (pulse counter clear) no: NO (no allocation)	01	—
C002	Multi-function input 2 selection		18	
C003	Multi-function input 3 selection *1		12	
C004	Multi-function input 4 selection		02	
C005	Multi-function input 5 selection		03	
C006	Multi-function input 6 selection		04	
C007	Multi-function input 7 selection		05	
C008	Multi-function input 8 selection		06	

*1. When the emergency shutoff function is enabled (SW1 = ON), C001 and C003 are forced to change to "18" (RS) and "64" (EMR), respectively. (You cannot intentionally set "64".)
If SW1 is turned on and then off, C003 is set to "no" (no allocation).

The functions switchable via the SET/SET3 terminal are:

F002/F202/F302 *	: 1st/2nd/3rd	acceleration time
F003/F203/F303 *	: 1st/2nd/3rd	deceleration time
A003/A203/A303	: 1st/2nd/3rd	base frequency
A004/A204/A304	: 1st/2nd/3rd	maximum frequency
A020/A220/A320 *	: 1st/2nd/3rd	multi-step speed reference 0
A041/A241	: 1st/2nd	torque boost selection
A042/A242/A342 *	: 1st/2nd/3rd	manual torque boost voltage
A043/A243/A343 *	: 1st/2nd/3rd	manual torque boost frequency
A044/A244/A344	: 1st/2nd/3rd	V/f characteristics selection
A046/A246 *	: 1st/2nd	automatic torque boost voltage compensation gain
A047/A247 *	: 1st/2nd	automatic torque boost slip compensation gain
A061/A261 *	: 1st/2nd	frequency upper limit
A062/A262 *	: 1st/2nd	frequency lower limit
A092/A292/A392 *	: 1st/2nd/3rd	acceleration time 2
A093/A293/A393 *	: 1st/2nd/3rd	deceleration time 2
A094/A294	: 1st/2nd	2-step acceleration/deceleration selection
A095/A295	: 1st/2nd	2-step acceleration frequency
A096/A296	: 1st/2nd	2-step deceleration frequency
b012/b212/b312 *	: 1st/2nd/3rd	electronic thermal level
b013/b213/b313 *	: 1st/2nd/3rd	electronic thermal characteristics selection
H002/H202	: 1st/2nd	motor parameter selection
H003/H203	: 1st/2nd	motor capacity selection
H004/H204	: 1st/2nd	motor pole number selection
H005/H205 *	: 1st/2nd	speed response
H006/H206/H306 *	: 1st/2nd/3rd	stabilization parameter
H020/H220	: 1st/2nd	motor parameter R1
H021/H221	: 1st/2nd	motor parameter R2
H022/H222	: 1st/2nd	motor parameter L
H023/H223	: 1st/2nd	motor parameter I0
H024/H224	: 1st/2nd	motor parameter J
H030/H230	: 1st/2nd	motor parameter R1 (auto-tuning)
H031/H231	: 1st/2nd	motor parameter R2 (auto-tuning)
H032/H232	: 1st/2nd	motor parameter L (auto-tuning)
H033/H233	: 1st/2nd	motor parameter I0 (auto-tuning)
H034/H234	: 1st/2nd	motor parameter J (auto-tuning)
H050/H250 *	: 1st/2nd	PI proportional gain
H051/H251 *	: 1st/2nd	PI integral gain
H052/H252 *	: 1st/2nd	P proportional gain
H060/H260 *	: 1st/2nd	Limit at 0 Hz

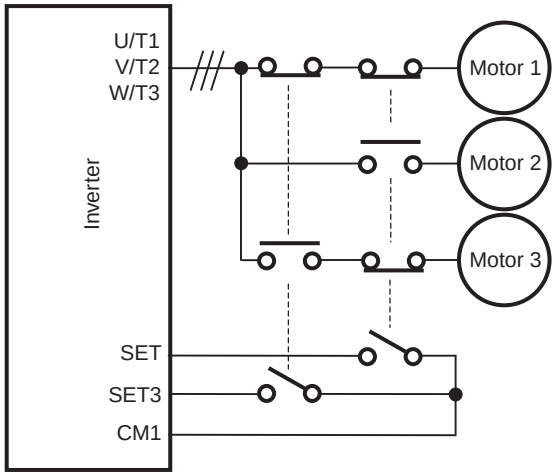

*: Parameters changeable during operation.
- The 1st/2nd/3rd control functions are displayed identically. You'll see which one is enabled by checking whether the terminal is turned on/off.
- When both SET and SET3 terminals are turned on, priority is given to SET, and the 2nd control function is enabled.
- During operation, you cannot switch between the 1st, 2nd, and 3rd control functions. You can switch them only during stop.

External Trip

•This function trips the Inverter via an error (trip) signal from a peripheral system. To use this function, allocate "12" (EXT) to any of multi-function inputs 1 to 8 (C001 to C008).

Data	Symbol	Function name	Status	Description
12	EXT	External trip	ON	Sets the motor to free-run status by shutting off output.
			OFF	The motor is in normal operation.
Available input terminals		C001 to C008		

Note: Do not turn on the EXT terminal after shutting off the power. Otherwise, the Inverter may not store data correctly.

•When the EXT terminal is turned on, E12 is displayed and the Inverter trips to stop output.
•When the Inverter has tripped, indicating E12, the trip is not reset even if the error signal from external equipment is reset (EXT terminal is turned off).
To reset the trip, perform the reset operation or turn the power off and on again.

Power Recovery Restart Prevention Function

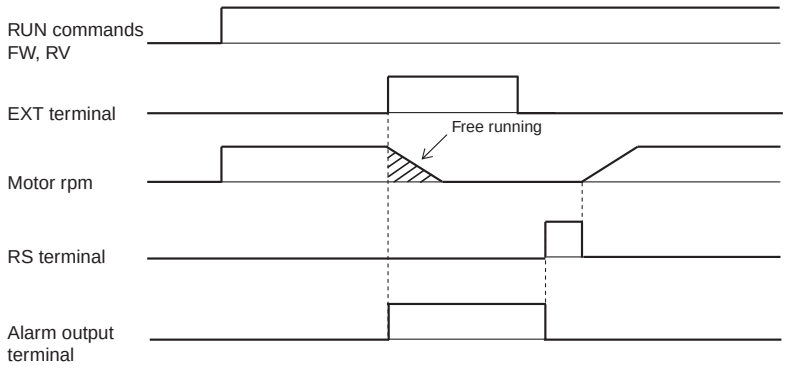

•This function trips the Inverter, displaying "E13", if the power is turned on with the RUN command to the Inverter turned on.

Data	Symbol	Function name	Status	Description
13	USP	USP function	ON	Does not start the Inverter with the power turned on while the RUN command is input.
			OFF	Starts the Inverter with the power turned on while the RUN command is input.
Available input terminals		C001 to C008		

•To reset a trip, perform the reset operation, or turn off the RUN command. (Example 1)
•If a trip is reset with the RUN command input turned on, the Inverter restarts operation immediately after the trip is reset. (Example 2)
•If the RUN command is turned on after the power is turned on, the Inverter operates normally. (Example 3)
•Allocate 13 (USP) to any of multi-function inputs 1 to 8 (C001 to C008).

• The following shows how the power recovery restart prevention function works.

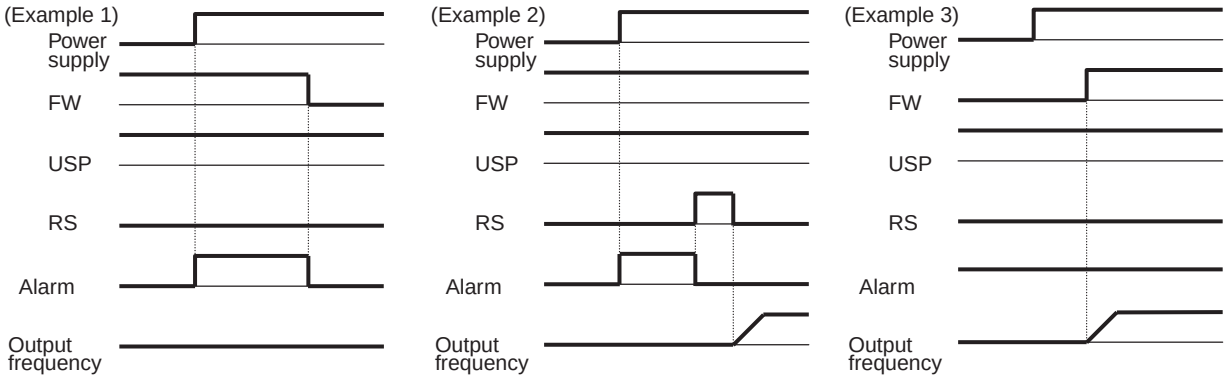

Commercial Switching

- You can use this function to drive a system with large moment of inertia during acceleration and deceleration by using the Inverter, and during constant speed by using a commercial power supply.
- Allocate "14" (CS) to any of multi-function inputs 1 to 8 (C001 to C008).
- When the CS terminal is turned on and then off with the RUN command turned on, the Inverter starts acceleration in synchronization with the motor rpm during free running, after the retry wait time (b003) elapses (frequency matching start). Note that the Inverter may start at 0 Hz if:
  - The motor rpm is equal to or lower than 1/2 of the base rpm
  - The motor induction voltage quickly attenuates
- If frequency matching lower limit frequency setting b007 is set, the Inverter starts at 0 Hz when the motor rpm lowers to the frequency set in b007. (Refer to page 4-38)
- Ensure that MC3 and MC2 are mechanically interlocked.
- If the earth leakage breaker (ELB) has tripped because of ground fault, the commercial power supply circuit does not work, either. If you need backup, supply power from a commercial power supply circuit (ELBC).
- For FWY, RVY, and CSY, use weak current relays. Refer to the following sequence for timing.
- If an overcurrent trip occurs at frequency matching, extend the retry wait time (b003).
- For commercial switching operation, refer to the following examples of connections and timing of commercial switching operation.
- At power-on, the Inverter can automatically perform retry operation. This does not require the following CS terminal. For details, refer to "Reset" (page 4-85).

Examples of connections and timing of commercial switching operation

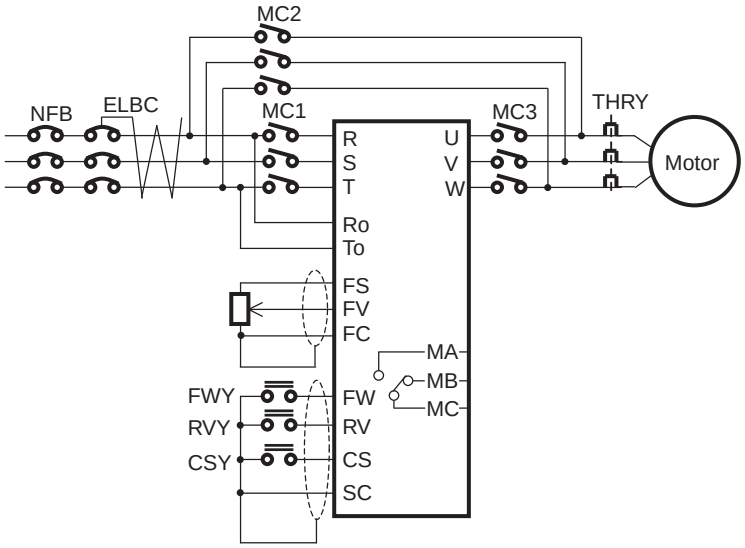

Timing example of switching from Inverter to commercial power

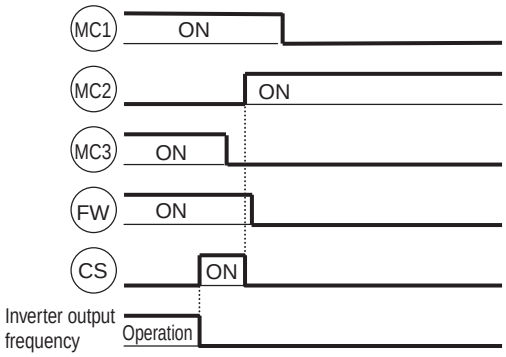

Timing example of switching from commercial power to Inverter

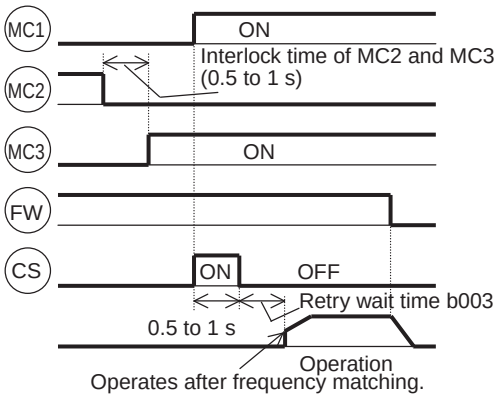

Reset

• This function resets an Inverter trip.

Parameter No.	Function name	Data	Default setting	Unit
b003	Retry wait time	0.3 to 100.: (Refer to "Momentary Power Interruption/ Trip Retry (Restart)" (page 4-42).) Time from reset to restart	1.0	s
b007	Frequency matching lower limit frequency setting	0.00 to 400.0: (Refer to "Momentary Power Interruption/ Trip Retry (Restart)" (page 4-42).)	0.00	Hz
C102	Reset selection	00: Trip reset at power-on (example 1) Normal: Output shut off Abnormal: Trip reset	00	—
		01: Trip reset at power-off (example 2) Normal: Output shut off Abnormal: Trip reset		
		02: Trip reset at power-on (example 1) Normal: Disabled Abnormal: Trip reset		
		03: Trip reset only (example 1) The Inverter does not initialize internal data at trip reset. Normal: Disabled Abnormal: Trip reset		
C103	Reset frequency matching selection	00: 0-Hz start 01: Frequency matching start (example 3) 02: Frequency pull-in restart	00	—

• To reset an Inverter trip, press the STOP/RESET key on the Digital Operator, or switch the RS terminal from ON to OFF.
• To reset via the control circuit terminal block, allocate 18 (RS) to the desired multi-function input.
• With reset frequency matching selection C103, you can select how to restart the Inverter after reset, a frequency matching or 0-Hz start. If an overcurrent trip occurs at frequency matching start, increase the retry wait time (b003).
• You can select an alarm reset timing in reset selection C102. In addition, you can enable the reset signal only for alarm resetting during error.
• For the RS terminal, only NO contact is available.

Note: Do not use the reset terminal to shut off the Inverter output. Reset operation clears the internal data (e.g. electronic thermal BRD counter), causing damage to the Inverter.

(Example 1)

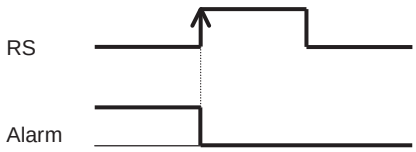

(Example 2)

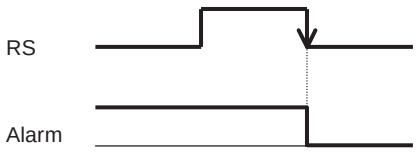

(Example 3) If "01" (frequency matching start) is selected in reset frequency matching selection C103, frequency matching start is also enabled when the power is turned on again. When C103 = 00 (0-Hz start), the retry wait time (b003) is ignored. Even if "frequency matching start" is selected, however, the Inverter may start at 0 Hz if:

- The output frequency is equal to or lower than 1/2 of the base frequency
- The motor induction voltage quickly attenuates

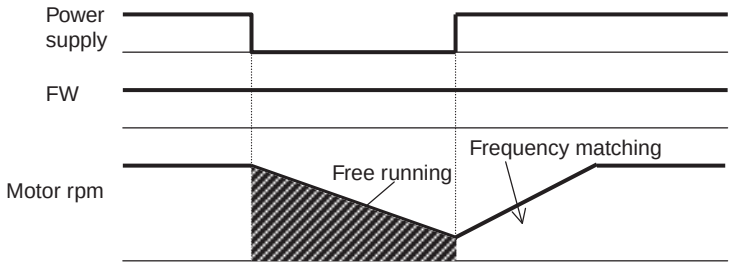

Note: The counters used for the Inverter's internal protection are cleared during reset.
To shut off the Inverter's output via a multi-function input terminal, use the free-run stop terminal (FRS).

(Example 4) Frequency pull-in restart

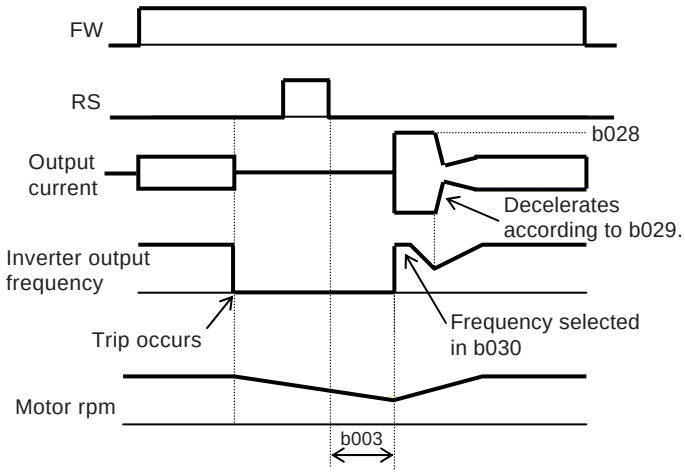

- After the retry wait time (b003) elapses, the Inverter starts output from the b030 set value. The Inverter then decelerates according to the b029 setting, while keeping the output current at the b028 set value.
- When the frequency matches the voltage, the Inverter accelerates again, and the frequency is restored to the original level.
- If an overcurrent trip occurs under this method, reduce the b028 setting.

Note: If a reset signal is input during the retry wait time, the value of "frequency at interruption" stored in the Inverter is cleared, resulting in a 0-Hz start.

3-wire Input Function

- This function helps start and stop the Inverter using an auto-recovery contact (e.g. pushbutton switch).

Data	Symbol	Function name	Status	Description
20	STA	3-wire start	ON	Starts with auto recovery contacts.
			OFF	Irrelevant to the motor operation.
21	STP	3-wire stop	ON	Stops with auto recovery contacts.
			OFF	Irrelevant to the motor operation.
22	F/R	3-wire forward/reverse	ON	Reverse
			OFF:	Forward

Data	Symbol	Function name	Status	Description
Available input terminals		C001 to C008		
Required settings		A002 = 01		

- Set RUN command selection A002 to 01 (control circuit terminal block).
- The following operations become possible when 20 (STA), 21 (STP), and 22 (F/R) are allocated to any of multi-function inputs 1 to 8 (C001 to C008). Allocating the STP terminal disables the FW and RV terminals.
- Below are the outputs via terminal operation.

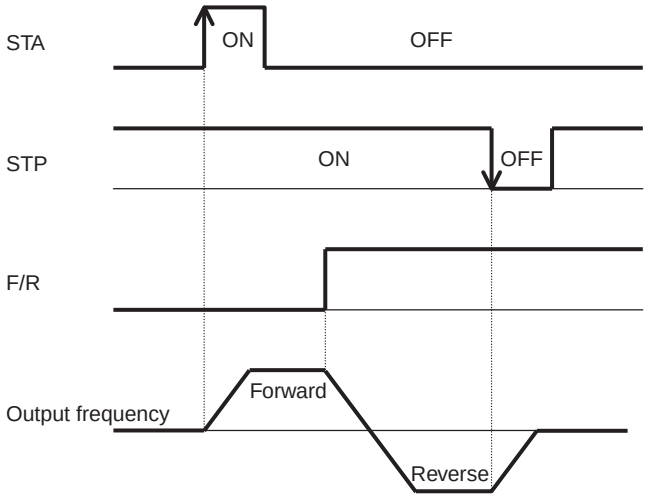

Control Gain Switching Function

- This function provides two types of gain and time constant settings for the speed control system (proportional/integral compensation). You can switch over these settings when "sensorless vector control", "0-Hz sensorless vector control", or "sensor vector control" is selected as the control method.

Parameter No.	Function name	Data	Default setting	Unit
A044/A244	V/f characteristics selection	03: Sensorless vector 04: 0-Hz sensorless vector 05: Sensor vector	00	—
C001 to C008	Multi-function inputs 1 to 8 selection	26: CAS (control gain switching)	—	—
H005/H205	Speed response	0.001 to 9.999/10.00 to 80.00	1.590	—
H050/H250	PI proportional gain	0.0 to 999.9/1000	100.0	%
H051/H251	PI integral gain	0.0 to 999.9/1000	100.0	%
H052/H252	P proportional gain	0.01 to 10.00	1.00	—
H070	For PI proportional gain switching	0.0 to 999.9/1000	100.0	%
H071	For PI integral gain switching	0.0 to 999.9/1000	100.0	%
H072	For P proportional gain switching	0.00 to 10.00	1.00	—

Parameter No.	Function name	Data	Default setting	Unit
H073	Gain switching time	0. to 9999. (ms): Taper time during gain switching	100.	ms

- If control gain switching is selected in the multi-function input selection, turning off the signal selects the gain setting of H050, H250, H051, H251, H052, or H252. Turning on the signal selects the gain setting of H070, H071, or H072.
- If control gain switching is not selected in multi-function inputs 1 to 8 (C001 to C008), the gain setting conforms to the status in which the signal is turned off.

UP/DOWN Function

- This function allows you to change the Inverter output frequency using the UP and DWN terminals of the multi-function inputs.

Data	Symbol	Function name	Status	Description
27	UP	UP/DWN function accelerated	ON	Increases the current speed during the signal input period.
			OFF	Keeps the current speed.
28	DWN	UP/DWN function decelerated	ON	Decreases the current speed during the signal input period.
			OFF	Keeps the current speed.
29	UDC	UP/DWN function data clear	ON	Clears the stored UP/DWN speed.
			OFF	Keeps the stored UP/DWN speed.
Available input terminals		C001 to C008		

Note: Do not turn on/off the UP/DWN terminal after shutting off the power. Otherwise, the Inverter may not store data correctly.

- Allocate "27" (UP) and "28" (DWN) to any of multi-function inputs 1 to 8 (C001 to C008).
- This function is enabled only when frequency reference selection A001 is set to "01" or "02". If "01" (terminal) is selected, however, this function is enabled for multi-step speed operation only.
- When you use an external analog input as frequency reference input, or when you set the jogging operation frequency, this function is disabled.
- While the UP/DWN terminal is turned on, the acceleration/deceleration time depends on F002, F003/F202, F203/F302, and F303. To switch between the 1st/2nd/3rd controls, allocate 08 (SET)/ 17 (SET3) to the desired multi-function input and then turn on/off the SET terminal.
- You can store a frequency set value after UP/DWN adjustment. Choose whether to store the value with C101.
  Also, you can clear the stored frequency set value.
  By allocating "29" (UDC) to a multi-function input and turning on/off the UDC terminal, you can clear or store the frequency reference setting adjusted at UP/DOWN.

Parameter No.	Data	Description
C101	00	Does not store the frequency reference adjusted at UP/DWN. After restoring the power, returns to the value set before UP/DWN adjustment.
	01	Stores the frequency reference adjusted at UP/DWN. After restoring the power, maintains the set value after UP/DWN adjustment.

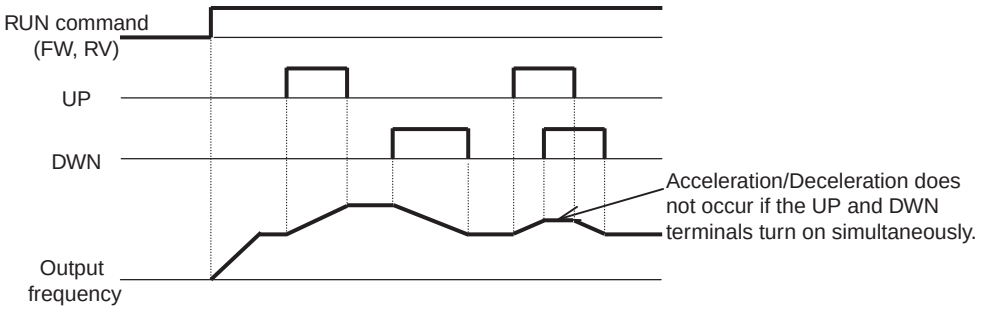

Forced Operator Function

- This function forcibly enables operation via the Digital Operator by turning on/off the multi-function terminal if the frequency reference/RUN command sources are not set to the Digital Operator.

Data	Symbol	Function name	Status	Description
31	OPE	Forced operator	ON	Prioritizes the command from the Digital Operator (A020, A220 set values) over the A001 and A002 settings.
			OFF	Operates according to the A001 and A002 settings.
Available input terminals		C001 to C008		
Related codes		A001, A002		

- If the Forced Operator function is selected in the multi-function input selection, the Inverter is operated with the signal from the frequency reference source and RUN command source selected in A001 and A002, when the input signal is OFF. When the signal is ON, the Inverter is forced to operate with the frequency reference or RUN command from the Digital Operator.
- If you switch on/off this function during operation, the RUN command is reset to stop the Inverter output. Before resuming operation, turn off the RUN command from each command source to avoid possible danger and then input it again.

P/PI Switching Function

- This function allows you to switch the control (compensation) method for the speed control system between proportional integral compensation and proportional compensation, when "sensorless vector control", "0-Hz sensorless vector control", or "sensor vector control" is selected as the control method.

Parameter No.	Function name	Data	Default setting	Unit
A044/A244/A344	V/f characteristics selection	03: SLV (A344 is blank.) 04: 0 Hz (A344 is blank.) 05: Sensor vector	00	—
C001 to C008	Multi-function inputs 1 to 8 selection	43: PPI (P/PI switching)	—	—
H005/H205	Speed response	0.001 to 80.000	1.590	—
H050/H250	PI proportional gain	0.0 to 999.9/1000	100.0	%
H051/H251	PI integral gain	0.0 to 999.9/1000	100.0	%
H052/H252	P proportional gain	0.001 to 10.00	1.00	—

- If P/PI switching is selected in the multi-function input selection, proportional integral compensation is enabled while the signal is off; proportional compensation is enabled while the signal is on. If P/PI switching is not selected in multi-function inputs 1 to 8 (C001 to C008), proportional integral compensation is enabled.

Normally, the Inverter performs proportional integral compensation (PI control) for speed control so that the difference between frequency reference and actual rpm becomes zero. If one load is operated by several motors, however, proportional control (P control) may be required. To enable proportional control (P control), allocate the P/PI switching function to any of multi-function input terminals S1 to S8 (set "43" in any of C001 to C008) via the Digital Operator, and turn on the terminal. If you choose to enable proportional control, set a "KPP" value in H052 (P proportional gain).

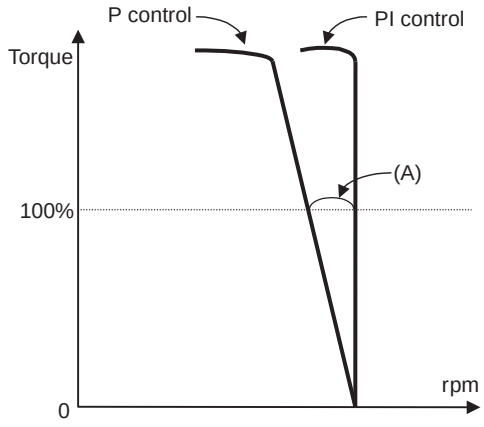

The relationship between the KPP value and speed change ratio is expressed broadly in the following formula:

$$\text{(Speed change ratio)} = \frac{10}{\text{(KPP set value)}}\ \%$$

The relationship between speed change ratio and speed error is expressed broadly in the following formula:

$$\text{(Speed change ratio)} = \frac{\text{Speed error at rated torque (A)}}{\text{Synchronous rpm at base frequency}} \times 100\%$$

Forced Terminal Block Function (F-TM)

- This function forcibly enables operation via the control terminal block by turning on/off the multi-function terminal if the frequency reference/RUN command sources are not set to the control terminal block.

Data	Symbol	Function name	Description
51	F-TM	Multi-function input selection	Forced terminal
Available input terminals		C001 to C008	
Related codes		A001, A002	

- If the Forced Terminal Block function is selected in the multi-function input selection, the Inverter is operated with the signal from the frequency reference source and RUN command source selected in A001 and A002, when the input signal is OFF. When the signal is ON, the Inverter is forced to operate with the frequency reference or RUN command from the control circuit terminal block.
- If you switch on/off this function during operation, the RUN command is reset to stop the Inverter output. Before resuming operation, turn off the RUN command from each command source to avoid possible danger and then input it again.

Analog Command Hold Function

•While the AHD terminal is turned on, the Inverter keeps external analog input results on hold.

Parameter No.	Function name	Data	Default setting	Unit
C001 to C008	Multi-function inputs 1 to 8 selection	65: AHD (analog command held)	—	—

•While the AHD terminal is turned on, you can use the UP/DWN function based on the reference value of the analog signal kept on hold by this function.
•If UP/DWN selection C101 is set to "01", the Inverter can store an UP/DWN result.
•If the power is turned on with the AHD terminal turned on, or if the RS terminal is turned on and then off, the Inverter employs the data kept on hold immediately before.

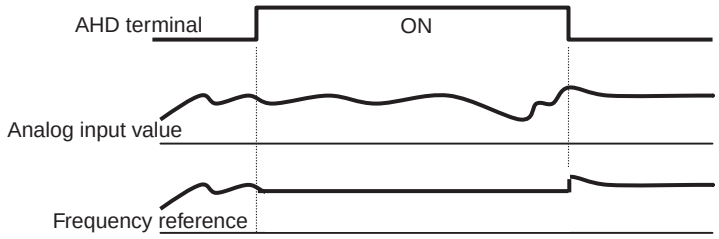

Note1: If the control function is switched via the SET/SET3 terminal with the AHD terminal turned on, the set frequency is retained. To change the control function, turn off the AHD terminal once, and keep the analog signal on hold again.
Note 2: If this function is frequently used, the internal storage element service life may be shortened.

Multi-function Pulse Counter (PCNT, PCC)

•The Inverter can input pulse trains via a multi-function input.
•With pulse counter monitor d028, you can monitor the total count of input pulses.

Parameter No.	Function name	Data	Default setting	Unit
C001 to C008	Multi-function inputs 1 to 8 selection	74: PCNT (pulse counter) 75: PCC (pulse counter clear)	—	—
Related functions		d028		

•The total pulse count value cannot be stored. After the power is turned on or after reset, the counter is reset to zero.
•Turning on PCC (pulse counter clear) clears the total count value.
•The input pulse frequency resolution can be obtained with the following formula. (This applies to pulse input with a 50% duty ratio.) The Inverter cannot input frequency higher than the specified frequency resolution. It is recommended that you use input frequencies up to 100 Hz. For details on input terminal response, refer to "Input Terminal Response Time" (page 4-105).

Frequency resolution (Hz) = 250/(Input terminal response time set values C160 to C168 + 1
Example: When the input terminal response time = 1, the frequency resolution = 125 Hz.

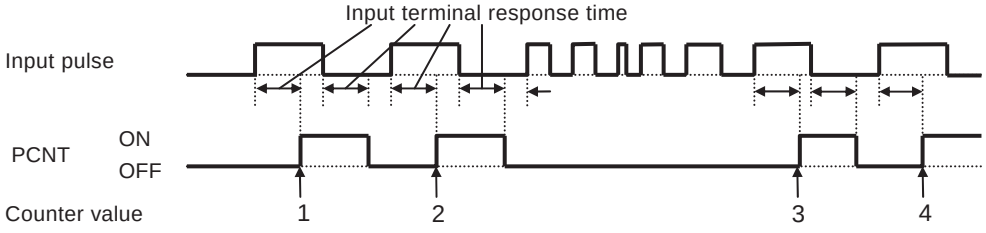

Multi-function Output Terminal Selection

- You can allocate the following functions to any of multi-function output terminals P1 to P5 (C021 to C025) or the alarm relay output terminal (C026).
- Multi-function output terminals P1 to P5 provide open-collector output. The alarm relay output terminal provides relay output.
- You can select NO- or NC-contact output for each output terminal with C031 to C035, or C036.
- If alarm code output is selected in C062 (refer to page 4-98), alarm code output (AC0 to AC3) is provided via output terminals P1 to P3 (for 3-bit code), or via output terminals P1 to P4 (for 4-bit code). The C021 to C025 settings are disabled.

Data	Description	Reference item	Page
00	RUN: Signal during RUN	Signal during RUN	4-95
01	FA1: Constant speed arrival signal	Frequency arrival signal	4-95
02	FA2: Over set frequency arrival signal		
03	OL: Overload warning	Overload limit/Overload warning	4-49
04	OD: Excessive PID deviation	PID function	4-31
05	AL: Alarm output	—	—
06	FA3: Set-frequency-only arrival signal	Frequency arrival signal	4-95
07	OTQ: Overtorque	Overtorque	4-97
08	IP: Signal during momentary power interruption	Momentary power interruption/Undervoltage	4-44
09	UV: Signal during undervoltage		
10	TRQ: Torque limit	Torque limit function	4-57
11	RNT: RUN time over	RUN time over	4-52
12	ONT: Power ON time over	Power ON time over	4-52
13	THM: Thermal warning	Electronic thermal function	4-46
19	BRK: Brake release	Brake control function	4-73
20	BER: Brake error		
21	ZS: 0-Hz signal	0-Hz detection signal	4-98
22	DSE: Excessive speed deviation	V2 control mode selection	4-119
23	POK: Position ready	Orientation function	4-129
24	FA4: Set frequency exceeded 2	Frequency arrival signal	4-95
25	FA5: Set frequency only 2		
26	OL2: Overload warning 2	Overload limit/Overload warning	4-49
27	FVDc: Analog FV disconnection detection	Window comparator function	4-63
28	FIDc: Analog FI disconnection detection		
29	FEDc: Analog FE disconnection detection		
31	FBV: PID FB status output	PID function	4-31
32	NDc: Network error	Network error	4-101

Data	Description	Reference item	Page
33	LOG1: Logic operation output 1	Logic operation function	4-99
34	LOG2: Logic operation output 2		
35	LOG3: Logic operation output 3		
36	LOG4: Logic operation output 4		
37	LOG5: Logic operation output 5		
38	LOG6: Logic operation output 6		
39	WAC: Capacitor life warning signal	Capacitor life warning signal	4-100
40	WAF: Cooling fan life warning signal	Cooling fan speed drop signal	4-101
41	FR: Starting contact signal	Starting contact signal	4-102
42	OHF: Fin overheat warning	Fin overheat warning	4-102
43	LOC: Light load detection signal	Light load detection signal	4-103
44	Not used		—
45	Not used		
46	Not used		
47	Not used		
48	Not used		
49	Not used		
50	IRDY: Operation ready signal	Operation ready signal	4-103
51	FWR: Forward run signal	Forward run signal	4-104
52	RVR: Reverse run signal	Reverse run signal	4-104
53	MJA: Fatal fault signal	Fatal fault signal	4-104
54	WCFV: Window comparator FV	Window comparator function	4-63
55	WCFI: Window comparator FI		
56	WCFE: Window comparator FE		
Related functions		C021 to C025, C026	

Multi-function Output Terminal Contact Selection

- You can set NO- or NC-contact output individually for multi-function output terminals P1 to P5 as well as the relay output terminal.
- Multi-function output terminals P1 to P5 provide open-collector output.

Parameter No.	Function name	Data	Default setting	Unit
C031 to C035	Multi-function output terminal contact selection	00: NO contact 01: NC contact	00	—
C036	Relay output (MA, MB) contact selection	00: NO contact between MA and MC 01: NC contact between MA and MC	01	—

■Specifications of Multi-function Output Terminals P1 to P5

• Below are the specifications of multi-function output terminals P1 to P5.

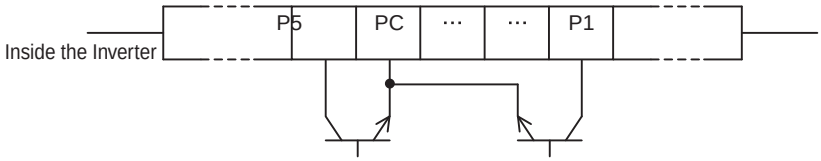

C031 to C035 set values	Power supply	Output status
00 (NO contact)	ON	ON
		OFF
	OFF	—
01 (NC contact)	ON	ON
		OFF
	OFF	—

Electrical characteristics
Between each terminal and PC Voltage drop 4 V max. at power-on Max. allowable voltage: 27 V DC Max. allowable current: 50 mA

■Specifications of the Relay Output Terminals

• The relay output terminals have an SPDT contact configuration. Below is its operation.

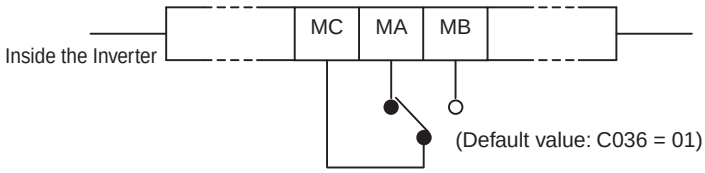

(Example) When the relay output terminals are used for alarm

C036 set values	Power	Inverter status	Output terminal status	
			MA-MC	MB-MC
00	ON	Abnormal	Closed	Open
		Normal	Open	Closed
	OFF	—	Open	Closed
01 (Default)	ON	Abnormal	Open	Closed
		Normal	Closed	Open
	OFF	—	Open	Closed

Resistance load		Inductive load	
MA-MC	Max. contact capacity	250 V AC, 2 A 30 V DC, 8 A	250 V AC, 0.2 A 30 V DC, 0.6 A
	Min. contact capacity	100 V AC, 10 mA 5 V DC, 100 mA	
MB-MC	Max. contact capacity	250 V AC, 1 A 30 V DC, 1 A	250 V AC, 0.2 A 30 V DC, 0.2 A
	Min. contact capacity	100 V AC, 10 mA 5 V DC, 100 mA	

Signal During RUN

- While the Inverter is running, this signal is output via multi-function output terminals P1 to P5 or the relay output terminal.
- Allocate "00" (RUN) to any of multi-function output terminals P1 to P5 (C021 to C025) or the relay output terminal (C026).
- This signal is also output during DC injection braking.

Below is the time chart.

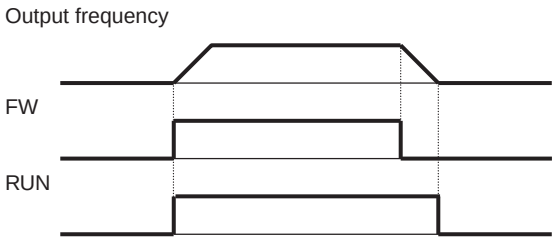

Frequency Arrival Signal

- When the output frequency reaches the set level, a frequency arrival signal is output.

Parameter No.	Function name	Data	Default setting	Unit
C042	Arrival frequency during acceleration	0.0: Does not output arrival signal during acceleration. 0.1 to 400.0: Outputs arrival signal during acceleration.	0.0	Hz
C045	Arrival frequency during acceleration 2			
C043	Arrival frequency during deceleration	0.0: Does not output arrival signal during deceleration. 0.1 to 400.0: Outputs arrival signal during deceleration.	0.0	Hz
C046	Arrival frequency during deceleration 2			

- For elevating machines, use this signal for applying the brake. To release the brake, use the overtorque signal.
- Allocate "01" (FA1: Constant speed arrival signal), "02" (FA2: Set frequency exceeded), "06" (FA3: Set frequency only), "24" (FA4: Set frequency exceeded 2), or "25" (FA5: Set frequency only 2) to any of multi-function output terminals P1 to P5 (C021 to C025) or the relay output terminal (C026).
- Below is the hysteresis of the frequency arrival signal:
  ON: (Set frequency - 1% of the maximum frequency) (Hz)
  OFF: (Set frequency - 2% of the maximum frequency) (Hz)

  If "06" (FA3) or "25" (FA5) is set, however, operation during acceleration is:
  ON: (Set frequency - 1% of the maximum frequency) (Hz)
  OFF: (Set frequency + 2% of the maximum frequency) (Hz)

  and operation during deceleration is:
  ON: (Set frequency + 1% of the maximum frequency) (Hz)
  OFF: (Set frequency - 2% of the maximum frequency) (Hz)

■Constant Speed Arrival Output (01: FA1)

A signal is output when the output frequency has reached the level set in the frequency setting (F001, A020, A220, and A320) or multi-step speed (A021 to A035).

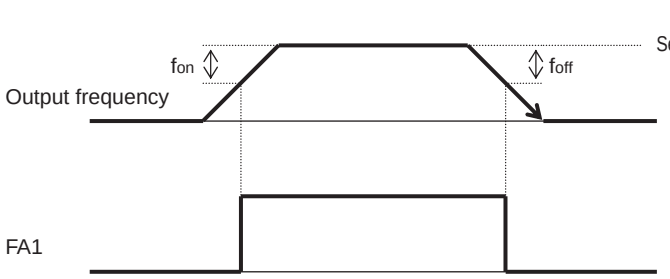

Set frequency { fon: 1% of the max. frequency
foff: 2% of the max. frequency

(Example) Max. frequency f_{max} = 120 (Hz)
Set frequency f_{set} = 60 (Hz)
f_{on} = 120 × 0.01 = 1.2 (Hz)
f_{off} = 120 × 0.02 = 2.4 (Hz)
During acceleration: ON at 60 - 1.2 = 58.8 (Hz)
During deceleration: OFF at 60 - 2.4 = 57.6 (Hz)

■Set-frequency-exceeded Output (02: FA2, 24: FA4)

A signal is output when the output frequency has exceeded the arrival frequencies during acceleration/deceleration set in [C042, C043 (FA2)] and [C045, C046 (FA4)].

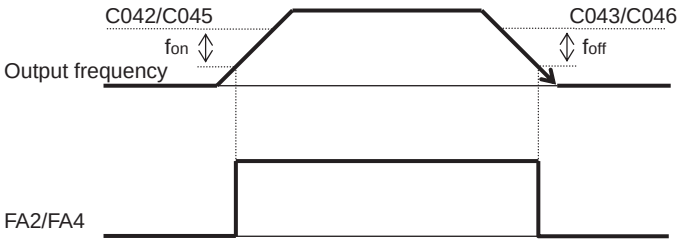

fon: 1% of the max. frequency
foff: 2% of the max. frequency

■Set-frequency-only Output (06: FA3, 25: FA5)

A signal is output when the output frequency equals the arrival frequencies during acceleration/deceleration set in [C042, C043 (FA3)] and [C045, C046 (FA5)].

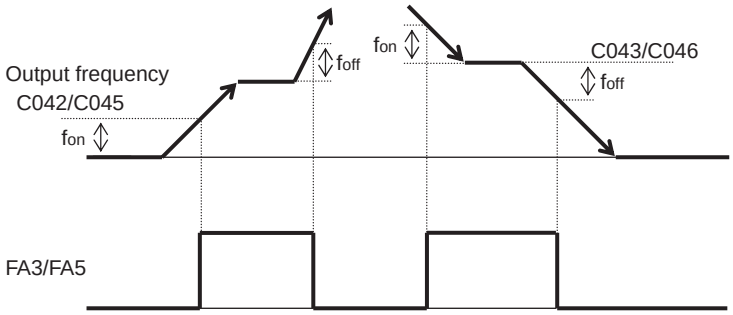

fon: 1% of the max. frequency
foff: 2% of the max. frequency

Overtorque (OTQ)

- This function outputs a signal when detecting a motor output torque estimated value exceeding a specified level.

Parameter No.	Function name	Data	Default setting	Unit
C021 to C025	Multi-function output terminal selection	07: OTQ: Overtorque signal	-	—
C026	Relay output (MA, MB) function selection		05	
C055	Overtorque level (Forward power running)	0. to 200. (0.4 to 55 kW) 0. to 180. (75 to 132 kW) OTQ signal output level for forward power running	100.	%
C056	Overtorque level (Reverse regeneration)	0. to 200. (0.4 to 55 kW) 0. to 180. (75 to 132 kW) OTQ signal output level for reverse regeneration	100.	%
C057	Overtorque level (Reverse power running)	0. to 200. (0.4 to 55 kW) 0. to 180. (75 to 132 kW) OTQ signal output level for reverse power running	100.	%
C058	Overtorque level (Forward regeneration)	0. to 200. (0.4 to 55 kW) 0. to 180. (75 to 132 kW) OTQ signal output level for forward regeneration	100.	%
Related functions		A044, A244, A344, C063		

- Enabled when "overtorque signal" is selected in the multi-function output selection. You can use this function only when "sensorless vector control", "0-Hz sensorless vector control", or "sensor vector control" is selected in V/f characteristics selection A044/A244. With other settings, the output is unstable.
- For elevating machines, use this signal for releasing the brake. To close the brake, use the frequency arrival signal.

0-Hz Detection Signal

• This function outputs a detection signal when the Inverter's output frequency falls below the 0-Hz detection value set in 0-Hz detection level C063.

Parameter No.	Function name	Data	Default setting	Unit
C021 to C025	Multi-function output terminal selection	21: ZS (0-Hz signal)	—	—
C026	Relay output (MA, MB) function selection		05	
C063	0-Hz detection level	0.00 to 100.0: Set a frequency to be detected as 0 Hz.	0.00	Hz
Related functions		A044, A244, A344		

• Enabled when "21" (ZS) is allocated to any of multi-function output terminals P1 to P5 (C021 to C025) or the relay output terminal (C026).
When "VC", "special VP", "free V/F", "sensorless vector control", or "0-Hz sensorless vector control" is selected as the control method, this function works for the Inverter's output frequency.
When the control method is "sensor vector control", this function works for the motor rotation frequency.

Alarm Code Output (AC0 to AC3)

• This function outputs a 3-bit or 4-bit code signal to indicate the cause of an Inverter trip.

Parameter No.	Function name	Data	Default setting	Unit
C062	Alarm code selection	00: Disabled	00	—
		01: 3-bit code		
		02: 4-bit code		

• If "01" (3-bit) or "02" (4-bit) is selected in alarm code selection C062, multi-function output terminals P1 to P3, or P1 to P4, are forced to output an alarm code.
The following table shows the output alarm codes.

Multi-function output terminals				With 4-bit code selected		With 3-bit code selected	
14	13	12	11	Factor code	Trip cause	Factor code	Trip cause
AC3	AC2	AC1	AC0				
0	0	0	0	Normal	Normal	Normal	Normal
0	0	0	1	E01 to E03, E04	Overcurrent protection	E01 to E03, E04	Overcurrent protection
0	0	1	0	E05, E38	Overload protection Overload protection in a low speed range	E05	Overload protection
0	0	1	1	E07, E15	Overvoltage/Incoming overvoltage protection	E07, E15	Overvoltage/Incoming overvoltage protection
0	1	0	0	E09	Undervoltage protection	E09	Undervoltage protection
0	1	0	1	E16	Momentary power interruption protection	E16	Momentary power interruption protection
0	1	1	0	E30	IGBT error	E30	IGBT error

Multi-function output terminals				With 4-bit code selected		With 3-bit code selected	
14	13	12	11	Factor code	Trip cause	Factor code	Trip cause
AC3	AC2	AC1	AC0				
0	1	1	1	E06	Braking resistor overload protection	—	Other errors
1	0	0	0	E08, E11 E23, E25	EEPROM error, CPU error, GA communication error, Main circuit error	—	—
1	0	0	1	E10	CT error	—	—
1	0	1	0	E12, E13 E35, E36	External trip, USP error, Thermistor error, Brake error	—	—
1	1	0	0	E14	Grounding protection	—	—
1	1	0	1	E20	Abnormal temperature due to the cooling fin's speed drop		
1	1	0	1	E21	Abnormal temperature	—	—
1	1	1	0	E24	Input phase loss protection	—	—
1	1	1	1	E50 to E79	Network error, Options 1, 2 Errors 0 to 9	—	—

Output Signal Logic Operation

- This function performs output signal logic operations inside the Inverter.
- All output signals are operation targets.
  However, the logic operation outputs (LOG1 to LOG6) are not subject to operations.

Parameter No.	Function name	Data	Default setting	Unit
C021 to C025	Multi-function output terminal selection	33: LOG1 (Logic operation output [C142, C143, C144]) 34: LOG2 (Logic operation output 2 [C145, C146, C147]) 35: LOG3 (Logic operation output 3 [C148, C149, C150]) 36: LOG4 (Logic operation output 4 [C151, C152, C153]) 37: LOG5 (Logic operation output 5 [C154, C155, C156]) 38: LOG6 (Logic operation output 6 [C157, C158, C159])	—	—
C026	Relay output (MA, MB) function selection		05	
C142/C145/C148/ C151/C154/C157	Logic output signal selection 1	Select 00 to 50 from the multi-function output data (other than LOG1 to LOG6): Select operand 1.	00	—
C143/C146/C149/ C152/C155/C158	Logic output signal selection 2	Select 00 to 50 from the multi-function output data (other than LOG1 to LOG6): Select operand 2.	00	—
C144/C147/C150/ C153/C156/C159	Logic output signal operator selection	00: AND 01: OR 02: XOR	00	—

• You can select from three types of operators (AND, OR, and XOR).

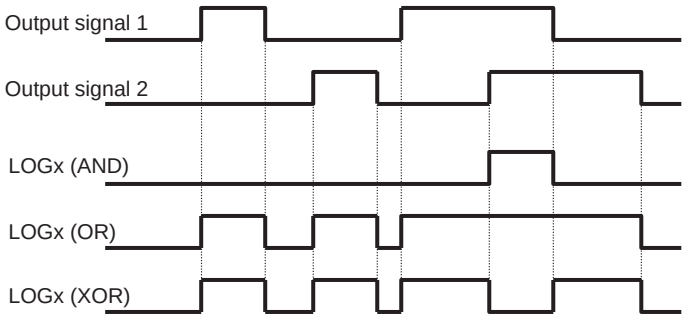

• The setting parameters vary depending on the logic operation output selected.
Refer to the following table to set the necessary parameters.

Selected signal	Operand 1 selection	Operand 2 selection	Operator selection
33: Logic operation output 1 (LOG1)	C142	C143	C144
34: Logic operation output 2 (LOG2)	C145	C146	C147
35: Logic operation output 3 (LOG3)	C148	C149	C150
36: Logic operation output 4 (LOG4)	C151	C152	C153
37: Logic operation output 5 (LOG5)	C154	C155	C156
38: Logic operation output 6 (LOG6)	C157	C158	C159

(Example) To output a logic output 1 (LOG1) signal through AND operation of "RUN signal" (00: RUN) and "over set frequency arrival signal" (02: FA2) to multi-function output 2
- Multi-function input 2 selection (C002) : 33 (LOG1)
- Logic output signal 1 selection 1 (C142) : 00 (RUN)
- Logic output signal 1 selection 2 (C143) : 02 (FA2)
- Logic output signal 1 operator selection (C144): 00 (AND)

Capacitor Life Warning Signal

- This function determines estimated service life of the capacitor on the PCB, based on the Inverter's internal temperature and ON time.
- Life assessment monitor d022 shows the status of this signal.
- If this function is activated, it is recommended that the main circuit board and logic board be replaced.

Parameter No.	Function name	Data	Default setting	Unit
C021 to C025	Multi-function output terminal selection	39: WAC (Capacitor life warning signal (on PCB))	—	—
C026	Relay output (MA, MB) function selection		05	

Network Error

- Enabled only when ModBus-RTU is selected for RS485 communication.
- If a reception timeout error occurs, this signal is output until reception of the next data.
- Set a time before reception timeout in communication error timeout C077.
- For details, refer to "4-4 Communication Function".

Parameter No.	Function name	Data	Default setting	Unit
C021 to C025	Multi-function output terminal selection	32: NDc (network communication disconnection detection)	—	—
C026	Relay output (MA, MB) function selection		05	
C077	Communication error timeout	0.00 to 99.99: Set a time before reception timeout.	0.00	s

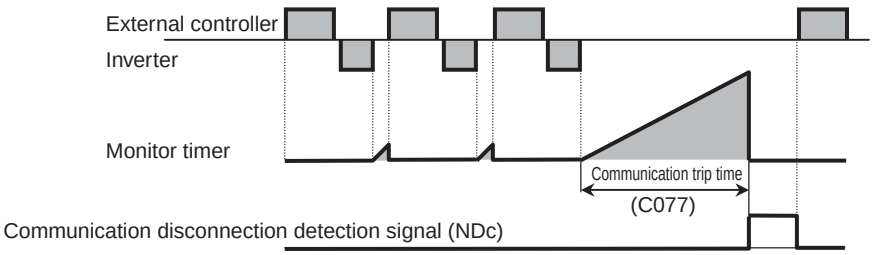

Cooling Fan Speed Drop Signal

- This signal is output when detecting that the Inverter's built-in cooling fan rotation speed is reduced to 75% or less.
- If "01" is selected in cooling fan control b092, this signal is not output even while the fan is stopped.
- While this signal is output, check the cooling fan for clogging.
- Life assessment monitor d022 shows the status of this signal.

Parameter No.	Function name	Data	Default setting	Unit
C021 to C025	Multi-function output terminal selection	40: WAF (cooling fan life warning signal)	—	—
C026	Relay output (MA, MB) function selection		05	
Related functions		b092, d022		

Starting Contact Signal

- While the Inverter is receiving the RUN command, a starting contact signal is output.
- The output is enabled regardless of the setting of RUN command source selection A002.
- If inputs FW and RV are simultaneously turned on, the Inverter stops.

Parameter No.	Function name	Data	Default setting	Unit
C021 to C025	Multi-function output terminal selection	41: FR (starting contact signal)	—	—
C026	Relay output (MA, MB) function selection		05	

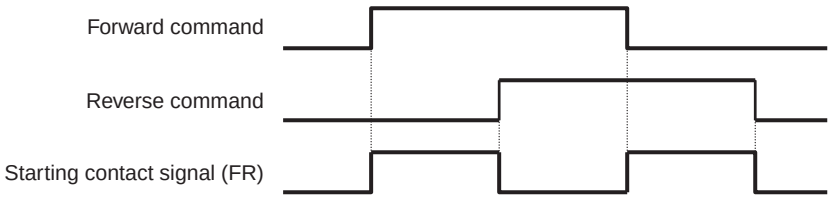

Fin Overheat Warning

- This function monitors the Inverter's internal fin temperature and outputs a signal when the temperature exceeds the fin overheat warning level (C064).

Parameter No.	Function name	Data	Default setting	Unit
C021 to C025	Multi-function output terminal selection	42: OHF (cooling fin overheat warning)	—	—
C026	Relay output (MA, MB) function selection		05	
C064	Fin overheat warning level	0. to 200.: Set a temperature to output the overheat warning signal.	120	°C

Light Load Detection Signal

- This signal is output when output current falls below the light load detection level (C039).
- In light load signal output mode C038, you can set whether this output is enabled in any operation mode, or only in constant speed operation.

Parameter No.	Function name	Data	Default setting	Unit
C021 to C025	Multi-function output terminal selection	43: LOC (light load detection signal)	—	—
C026	Relay output (MA, MB) function selection		05	
C038	Light load signal output mode	00: Enabled in operation 01: Enabled only in constant speed operation	01	—
C039	Light load detection level	0.0 to 2.0 × Rated current: Set an output level for low current signals.	Rated current	A

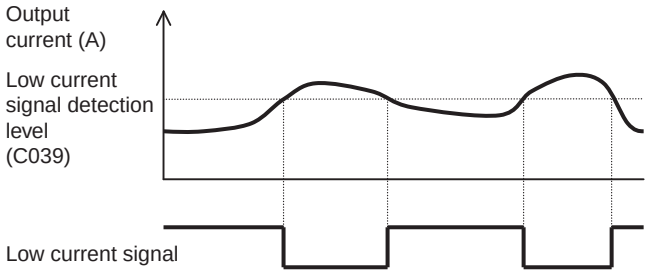

Operation Ready Signal

- This signal is output when the Inverter becomes ready for operation (ready to receive the RUN command).
- Even if the RUN command is input while this signal is not output, the Inverter does not recognize the RUN command.
- If this signal is not output, check if the input power supply voltage (R, S, T) is within the specified range.

Parameter No.	Function name	Data	Default setting	Unit
C021 to C025	Multi-function output terminal selection	50: IRDY (operation ready signal)	—	—
C026	Relay output (MA, MB) function selection		05	

Forward Run Signal

- This signal is output while the Inverter is running forward.
- While the Inverter is running in reverse, or when stopped, this signal is turned off.

Parameter No.	Function name	Data	Default setting	Unit
C021 to C025	Multi-function output terminal selection	51: FWR (forward run signal)	—	—
C026	Relay output (MA, MB) function selection		05	

Reverse Run Signal

- This signal is output while the Inverter is running in reverse.
- While the Inverter is running forward, or when stopped, this signal is turned off.

Parameter No.	Function name	Data	Default setting	Unit
C021 to C025	Multi-function output terminal selection	52: RVR (reverse run signal)	—	—
C026	Relay output (MA, MB) function selection		05	

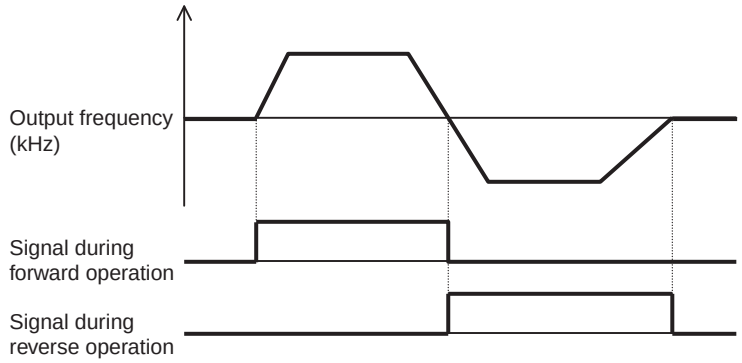

Fatal Fault Signal

Parameter No.	Function name	Data	Default setting	Unit
C021 to C025	Multi-function output terminal selection	53: MJA (fatal fault signal)	—	—
C026	Relay output (MA, MB) function selection		05	

- In addition to an alarm, this signal is output if any of the following trips occurs.

(These trips are caused by hardware.)

No.	Error code	Description
1	E10.*	CT error
2	E11.*	CPU error
3	E14.*	Grounding protection
4	E20.*	Abnormal temperature due to cooling fan stop
5	E23.*	Gate array communications error
6	E25.*	Main circuit error

Multi-function Output Terminal ON Delay/OFF Delay

- You can set ON/OFF delay times for each output terminal.

Output terminal	ON delay time	OFF delay time
P1	C130	C131
P2	C132	C133
P3	C134	C135
P4	C136	C137
P5	C138	C139
RY (AL*)	C140	C141

- All output signals immediately turn on/off when the specified conditions are satisfied. Depending on the selected signal, chattering may occur. In such a case, use this function to hold or delay the signal.
- Set the parameters for individual output terminals (multi-function output terminals P1 to P5 and the relay output terminal: six terminals in total). For the output terminals and the corresponding parameters, refer to the table below.

Function code	Item	Data	Default setting	Unit
C130/C132/C134/C136/ C138/C140	Output ON delay	0.0 to 100.0: Set an ON delay time.	0.0	s
C131/C133/C135/C137/ C139/C141	Output OFF delay	0.0 to 100.0: Set an OFF delay time.	0.0	s

Input Terminal Response Time

- You can set a sampling time individually for multi-function input terminals S1 to S8 as well as the FW terminal. This helps remove chattering or other noise.
- If the terminal input becomes unstable because of chattering, increase the set value. The larger the data value is, the slower the response time. A setting range of 0 to 200 is available, which corresponds to approx. 2 to 400 ms.

Parameter No.	Function name	Data	Default setting	Unit
C160 to C167	Input terminal response time	0. to 200. (× 2 ms): Can be set in increments of 1.	1	ms
C168	FW terminal response time			

Digital MP Terminal

- You can monitor the output frequency and current using the MP terminal on the control circuit terminal block.
- The MP terminal provides pulse output.

■MP Selection

- Select a signal to output from the following table.
  For "03" (digital output frequency), use the digital frequency counter.
  For other output signals, use the analog meter.

Parameter No.	Data	Description	Full-scale value
C027	00	Output frequency (example 1)	0 to Max. frequency (Hz)*3
	01	Output current (example 1)	0% to 200%
	02	Output torque (example 1)*1	0% to 200%
	03	Digital output frequency (example 2)	0 to Max. frequency (Hz)
	04	Output voltage (example 1)	0% to 100%
	05	Input voltage (example 1)	0% to 200%
	06	Thermal load rate (example 1)	0% to 100%
	07	LAD frequency (example 1)	0 to Max. frequency (Hz)
	08	Digital current monitor	*2
	09	Motor temperature	0°C to 200°C (0°C output at 0°C or lower)
	10	Fin temperature	0°C to 200°C (0°C output at 0°C or lower)
	12	Not used	

*1. This output is enabled only when "SLV", "0-Hz SLV", or "V2" is selected. (Refer to "Control Method (V/f Characteristics)" (page 4-21).)

(Example 1) Set values: 00, 01, 02, 04, 05, 06, 07, 09, 10, 12

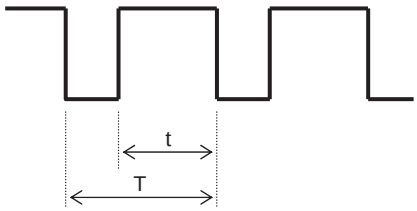

Cycle T: Constant (6.4 ms)
Duty ratio t/T: Variable

(Example 2) Set values: 03, 08

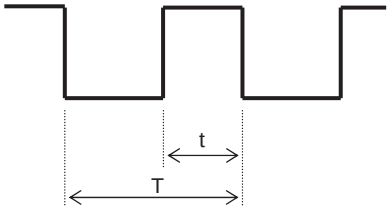

Cycle T: Variable
Duty ratio t/T: Fixed to 1/2

*2. Digital current monitor

- When the monitor displays the value set in digital current monitor reference value C030, 1440 Hz is output.

Parameter No.	Function name	Data	Default setting	Unit
C030	Digital current monitor reference value	0.2 × Rated current to 2.0 × Rated current: Set a current value at 1440-Hz output.	Rated current	A

*3. When "sensor vector control" is selected (A044 = 05), the real frequency (detected frequency) is displayed.

■MP Adjustment

•Adjust the Inverter output gain according to the meter connected to the MP terminal.

Parameter No.	Function name	Data	Default setting	Unit
C105	MP gain setting	50. to 200.: Set a gain for the MP monitor.	100.	%
Related functions		C027, b081		

Analog Output AM/AMI Terminals

You can monitor the output frequency and current using the AM and AMI terminals on the control circuit terminal block.
The AM terminal provides 0- to 10-V analog output.
The AMI terminal provides 4- to 20-mA analog output.

■AM/AMI Selection

•Select a signal to output from the following table.

Parameter No.	Function name	Data	Default setting	Unit
C028/C029	AM selection/ AMI selection	00: Output frequency (0 to Max. frequency (Hz)[*3])	00	—
		01: Output current (0% to 200%)		
		02: Output torque [*1](0% to 200%)		
		04: Output voltage (0% to 100%)		
		05: Input voltage (0% to 200%)		
		06: Thermal load rate (0% to 100%)		
		07: LAD frequency (0 to Max. frequency [Hz])		
		09: Motor temperature (0°C to 200°C) (0°C output at 0°C or lower)		
		10: Fin temperature (0°C to 200°C) (0°C output at 0°C or lower)		
		11: Output torque (signed) (AM output only. 0% to 200% [*1] [*2])		
		13: Not used		
		14: Not used		

*1. This output is enabled only when "SLV", "0-Hz SLV", or "V2" is selected. (Refer to "Control Method (V/f Characteristics)" (page 4-21).)

*2. Below are the specifications of the output torque (signed).

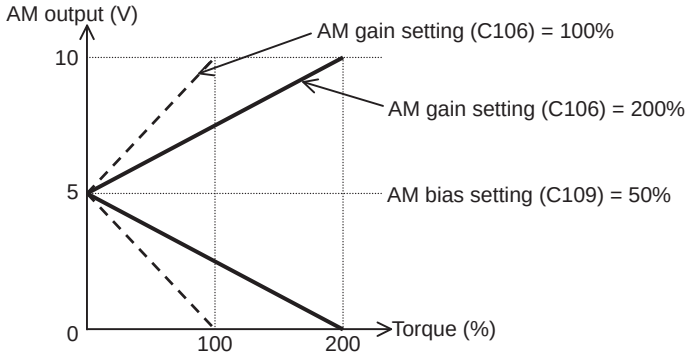

*3. When "sensor vector control" is selected (A044 = 05), the real frequency (detected frequency) is displayed.

■AM/AMI Adjustment

•Adjust the Inverter output gain according to the meters connected to the AM and AMI terminals.

Parameter No.	Function name	Data	Default setting	Unit
C106	AM gain setting	50. to 200.: Set a gain for the AM monitor.	100.	%
C109	AM bias setting	0 to 100: Set an offset for the AM monitor.	0.	
C107	AMI gain setting	50. to 200.: Set a gain for the AMI monitor.	100.	
C110	AMI bias setting	0 to 100: Set an offset for the AMI monitor.	20.	

Note: The offset data is set in %.
(Example) If AMI provides 4 to 20 mA output, the offset value is 20% (= 4/20). (Default value)

Operation Selection During Option Error

If the built-in optional board causes an error, you can set whether the Inverter trips or continues to run regardless of the option error.

Parameter No.	Function name	Data	Default setting	Unit
P001/P002	Operation selection at option error	00: TRP (Outputs an alarm.) 01: RUN (Continues to operate.)	00	—

<Group H: Motor Control Parameters>

Offline Auto-Tuning Function

•This function enables measurement and automatic setting of the motor parameters required for "sensorless vector control", "0-Hz sensorless vector control", and "sensor vector control".
•To perform "sensorless vector control", "0-Hz sensorless vector control", or "sensor vector control" for a motor with unknown motor parameters, perform offline auto-tuning to determine the motor parameters.
•To use the online auto-tuning function described later, be sure to perform offline auto-tuning.
•This function is applicable to 1st/2nd control, not to 3rd control.

•For motor parameters, the Inverter inputs data on one phase of Y-connection at 50 Hz.

Parameter No.	Function name	Data	Default setting	Unit
H001	Auto-tuning selection	00: Disabled 01: Enabled (Motor does not rotate.) 02: Enabled (Motor rotates.)	00	—
H002/H202	Motor parameter selection	00: Standard motor parameter 01: Auto-tuning parameter 02: Auto-tuning parameter (Online auto-tuning enabled.)	00	—
H003/H203	Motor capacity selection	0.2 to 160.0	Factory default	kW
H004/H204	Motor pole number selection	2/4/6/8/10	4	Pole
H030/H230	Motor parameter R1 (auto-tuning data)	0.000 to 65.53	Depends on the motor capacity.	Ω
H031/H231	Motor parameter R2 (auto-tuning data)	0.000 to 65.53	Depends on the motor capacity.	Ω
H032/H232	Motor parameter L (auto-tuning data)	0.00 to 655.3	Depends on the motor capacity.	mH
H033/H233	Motor parameter Io (auto-tuning data)	0.00 to 655.3	Depends on the motor capacity.	A
H034/H234	Motor parameter J (auto-tuning data)	0.001 to 9999.	Depends on the motor capacity.	kgm^2
A003	Base frequency	30 to Max. frequency	60	Hz
A051	DC injection braking selection	00: Disabled 01: Enabled	00	—
A082	AVR voltage selection	200/215/220/230/240: Selectable for 200-V class 380/400/415/440/460/480: Selectable for 400-V class	200/400	—

•Note the following before use:

- •Set base frequency A003 and AVR voltage selection A082 according to the specifications of the motor to be measured.
- •The motor parameters can be determined for motors with the maximum applicable capacity or one rank lower motor size. For motors with other capacities, correct constant data may not be obtained. (In some cases, auto-tuning may not be completed. In this case, pressing the STOP/RESET key displays an error message.)
- •If DC injection braking selection A051 is set to "01" (enabled), the data cannot be measured correctly. Be sure to set to "00" (disabled). (The default setting is "00" (disabled).)
- •If "02" (auto-tuning with motor rotation) is selected in auto-tuning selection H001, note the following:
  - •Make sure there is no problem even if the motor accelerates up to approx. 80% of the base frequency.
  - •The motor is not driven by external equipment.
  - •The brake is released.
  - •During auto-tuning, the output torque is insufficient, which may cause an elevator system to slip and fall. To prevent this, remove the motor from the load machine, and perform the auto-tuning for the motor separately. (In this case, moment of inertia (J) is determined for the single motor. You should add a motor shaft conversion value of the load machine's moment of inertial to parameter J.)

- •With a machine (e.g. lift, ball screw) whose motor shaft rotation is limited, the machine may be damaged if the allowable rotation limit is exceeded. In this case, set H001 to "01" (auto-tuning without motor rotation).
- •With a motor whose no-load current is unknown, measure the current at 50 Hz in the "V/f setting" mode, and perform auto-tuning after setting the current value in H023/H223.

•Even if "01" (auto-tuning without motor rotation) is selected in H001, the motor may slightly rotate.

•To perform auto-tuning for one rank lower motor size, enable the overload limit function and set the overload limit level to 1.5 times the rated current of the motor.

Operating Procedure

(1) Set auto-tuning selection H001 to "01" or "02".

(2) Turn on the RUN command.

Turning on the RUN command starts automatic operation in the following sequence.

(1) 1st AC excitation (Motor does not run.)
↓
(2) 2nd AC excitation (Motor does not run.)
↓
(3) 1st DC excitation (Motor does not run.)
↓
(4) V/f operation (Motor accelerates up to 80% of the base frequency.)
↓
(5) SLV operation (Motor accelerates up to x% of the base frequency.)
↓
(6) 2nd DC excitation (Motor does not run.)
↓
(7) The auto-tuning result is displayed.

Note 1: When "auto-tuning without motor rotation" is selected (H001 = 01), steps (4) and (5) are not performed.

Note 2: The rotation frequency in step (5) is defined as follows ("T" is whichever larger value of acceleration time or deceleration time in step (4)):
When $T \leq 0 < 50$ s, x = 40%
When $50 \text{ s} \leq T < 100$ s, x = 20%
When $100 \text{ s} \leq T$, x = 10%

Note 3: The auto-tuning result is displayed as follows:

Normal end

Abnormal end

If auto-tuning abnormally ends, perform it again.
(Press the STOP/RESET key to clear the display.)

Note 4: If a trip occurs during auto-tuning, the auto-tuning processing is forced to stop.
(No error message appears. Trip display is given higher priority.)
After removing the cause of a trip, perform the auto-tuning again.

Note 5: If the auto-tuning is interrupted by STOP command input (by pressing the STOP key or by turning off the RUN command), the parameters for auto-tuning may remain in the Inverter. To perform the auto-tuning again, initialize the parameters, and then set each parameter again. (This also applies when you restart ordinary operation.)

Note 6: If the offline auto-tuning is performed with "free V/f setting" selected as the control method, the Inverter displays an error message and stops processing.

Note 7: Even if auto-tuning is completed normally, the Inverter cannot be operated with the tuning data. To do so, be sure to set motor parameter selection H002 to "01".

Online Auto-Tuning Function

- Online auto-tuning compensates for changes in motor parameters resulting from a motor temperature rise or other factor, thus ensuring stable operation.
- This function is applicable to 1st/2nd control, not to 3rd control.

Parameter No.	Function name	Data	Default setting	Unit
H002/H202	Motor parameter selection	00: Standard motor parameter 01: Auto-tuning parameter 02: Auto-tuning parameter (Online auto-tuning data enabled.)	00	—

Note the following before use:

- Be sure to perform the offline auto-tuning before the online auto-tuning.
- This function calculates online auto-tuning data during offline auto-tuning. Even with a general-purpose motor, perform offline auto-tuning once.
- After the motor is stopped, online auto-tuning is performed for 5 seconds max. (For tuning R1 and R2, this function performs DC excitation once. The tuning result is not displayed.) If the RUN command is input during this period, priority is given to the RUN command, and the online auto-tuning is aborted. (The tuning result is not reflected.)
- With "DC injection braking during stop" selected, online auto-tuning starts after DC injection braking is completed.
- If FOC and SON are allocated to terminals, online auto-tuning is not performed.

Operating Procedure

(1) Set motor parameter selection H002 to "02" (online auto-tuning enabled).
(Set auto-tuning selection H001 to "00" (disabled).)
(2) Turn on the RUN command. (The Inverter automatically performs online auto-tuning during stop.)

Secondary Resistance Compensation Function (Temperature Compensation)

- This function compensates for speed fluctuations resulting from motor temperature changes, when "sensorless vector control", "0-Hz sensorless vector control", or "sensor vector control" is selected as the control method.
Use thermistor PB-41E (SHIBAURA ELECTRONICS).
- To use this function, set thermistor selection b098 to "02" (NTC).
(With other thermistors and settings, the motor temperature cannot be detected correctly.)

Parameter No.	Function name	Data	Default setting	Unit
P025	Secondary resistance compensation enable/disable selection	00: Disabled 01: Enabled	00	—

Motor Parameter Selection

- Set this parameter according to your motor.
- To use several motors with a single Inverter in the "VC", "special VP", or "free V/F setting" control mode, calculate the total capacity of the motors and select the closest value in the motor capacity selection.
- When automatic torque boost is used, improper setting of this parameter may result in torque reduction or motor hunting.
- The motor parameters for "sensorless vector control", "0-Hz sensorless vector control", or "sensor vector control" can be selected from the following three types:
  - Motor parameter of a standard motor
  - Motor parameter measured by offline auto-tuning
  - Arbitrarily set motor parameter
- For 3rd control, motor parameters specified for 1st control are used.

Parameter No.	Function name	Data	Default setting	Unit
A044/A244/ A344	V/f characteristics selection	00: Constant torque characteristics (VC) 01: Special reduced torque characteristics (Special VP) 02: V/f free setting *1 03: Sensorless vector control (SLV) *1 04: 0-Hz sensorless vector control *1 05: Sensor vector control (V2) *1	00	—
H002/H202	Motor parameter selection	00: Standard motor parameter 01: Auto-tuning parameter 02: Online auto-tuning parameter	00	—
H003/H203	Motor capacity selection	0.2 to 160.0	Factory default	kW
H004/H204	Motor pole number selection	2/4/6/8/10	4	Pole
H020/H220	Motor parameter R1	0.000 to 65.53	Depends on the motor capacity.	Ω
H021/H221	Motor parameter R2	0.000 to 65.53	Depends on the motor capacity.	Ω
H022/H222	Motor parameter L	0.00 to 655.3	Depends on the motor capacity.	mH
H023/H223	Motor parameter Io	0.00 to 655.3	Depends on the motor capacity.	A
H024/H224	Motor parameter J	0.001 to 9999. *2	Depends on the motor capacity.	kgm^2
H030/H230	Motor parameter R1 (auto-tuning data)	0.000 to 65.53	Depends on the motor capacity.	Ω
H031/H231	Motor parameter R2 (auto-tuning data)	0.000 to 65.53	Depends on the motor capacity.	Ω
H032/H232	Motor parameter L (auto-tuning data)	0.00 to 655.3	Depends on the motor capacity.	mH
H033/H233	Motor parameter Io (auto-tuning data)	0.00 to 655.3	Depends on the motor capacity.	A
H034/H234	Motor parameter J (auto-tuning data)	0.001 to 9999.	Depends on the motor capacity.	kgm^2

*1. For 1st control A044, all items (00 to 05) are selectable. However, for 2nd control A244 and 3rd control A344, the selectable range is 00 to 04, and 00 to 01, respectively.

*2: Convert moment of inertia J into motor shaft data. The larger the J value, the faster the response, resulting in a steep torque rise; the smaller the J value, the slower the response, resulting in a gradual torque rise. After setting the J value, adjust the response speed in speed response H005/H205.

Arbitrary Motor Parameter

- For arbitrary settings of motor parameters, the function codes vary depending on the setting of 1st/2nd control and on the set value of the motor parameter selection.
  - When 1st/2nd control is enabled and the motor parameter selection is set to "00" → Directly enter H020 to H024.
  - When 1st/2nd control is enabled and the motor parameter selection is set to "01" or "02" → Directly enter H030 to H034.
- If offline auto-tuning has not been performed, the motor parameters in the same capacity rank as the Inverter (standard motor parameters) are set in H030/H230 to H034/H234.

Sensorless Vector Control

- This function estimates and controls motor rpm and output torque based on the Inverter's output voltage and current, as well as the motor parameter settings. This control method provides high starting torque in a low-frequency range (0.3 Hz), enabling high-precision operation.
- To use this function, set V/f characteristics selection A044/A244 to "03".
- To use this function, make sure that the motor parameter settings are suitable for your motor. (Refer to "Motor Parameter Selection" (page 4-112)).

- Note the following before use:
  - Sufficient characteristics may not be obtained if you select a motor size two or more ranks lower than the motor size specified.
  - If sensorless vector control cannot provide the desired characteristics, adjust the motor parameters depending on the phenomena, as shown in the table below.

Operation status	Phenomenon	Adjusting method	Adjustment item
Power running	Speed change ratio is a negative value.	Increase motor parameter R2 gradually (up to set parameter × 1.2).	H021/H221/H031
	Speed change ratio is a positive value.	Reduce motor parameter R2 gradually (down to set parameter × 0.8).	H021/H221/H031
Regeneration	Insufficient torque at low frequency (several Hz)	Increase motor parameter R1 gradually (up to set parameter × 1.2).	H020/H220/H030
		Increase motor parameter Io gradually (up to set parameter × 1.2).	H023/H223/H033
During startup	Shock occurs during startup.	Reduce motor parameter J from the set parameter.	H024/H224/H034
During deceleration	Motor hunting	Reduce the speed response.	H005/H205
		Reduce motor parameter J from the set parameter.	H024/H224/H034
During torque limit	Insufficient torque at low frequency during torque limit	Set a overload limit level lower than that of the torque.	b021 b041 to b044
Low-frequency operation	Rotation is not constant.	Increase motor parameter J from the set parameter.	H024/H224/H034
Related functions		A001, A044/A244, F001, b040, b041 to b044, H002/H202, H003/H203, H004/H204, H005/H205, H020/H220, H021/H221, H022/H222, H023/H223, H024/H224, H050/H250, H051/H251, H052/H252	

Note 1: Make sure that the carrier frequency (b083) is not lower than 2.1 kHz. If the carrier frequency is lower than 2.1 Hz, the Inverter does not operate normally.
Note 2: To use lower rank motor size than the Inverter, set a torque limit value (b041 to b044), while keeping the value α, calculated with the following formula, at 200% or lower. Otherwise, the motor may burn out.
α = Torque limit set value × (Inverter capacity) / (Motor capacity)
(Example) If the Inverter capacity is 0.75 kW and the motor capacity is 0.4 kW, the torque limit set value for α = 200%, calculated with the above formula, is as follows: Torque limit set value (b041 to b044) = α × (Motor capacity) / (Inverter capacity) = 200% x (0.4 kW)/(0.75 kW) = 106%

0-Hz Sensorless Vector Control

- This function enables high-torque operation in the 0-Hz range (0- to 3-Hz frequency reference). This control method is particularly suitable for applications such as an elevating system, which requires sufficient torque in a low-frequency range at startup (e.g. crane, hoist).
- To use this function, set V/f characteristics selection A044/A244 to "04".
- To use this function, make sure that the motor parameter settings are suitable for your motor. (Refer to "Motor Parameter Selection" (page 4-112).)
- The parameters for 0-Hz SLV control are as follows:
  - In 0-Hz limit H060/H260, you can set a current value used for constant current control in the 0-Hz range (generally, 3.0 Hz or lower). This parameter is expressed as a ratio of the output current to the Inverter's rated current.
  - In 0-Hz SLV startup boost amount H061/H261, you can set a current boost amount at startup in the 0-Hz range. A current value expressed as a ratio to the Inverter's rated current is added to the current value set in H060/H260 at startup only.

Parameter No.	Function name	Data	Default setting	Unit
H060/H260	Limit at 0 Hz	0.0 to 100.0: Current limit in low frequency range	100.0	%
H061/H261	Boost amount at SLV startup, 0 Hz	0. to 50.: Current boost amount at startup	50.	%

- Note the following before use:
  - Select an Inverter with one rank higher in capacity than the motor's.
  - Sufficient characteristics may not be obtained if you select a motor size two or more ranks lower than the maximum applicable motor size.
  - In the 0-Hz sensorless control mode, the digital command board (3GAX-DI01) cannot be used.

• If 0-Hz sensorless vector control cannot provide the desired characteristics, adjust the motor parameters depending on the phenomena, as shown in the table below.

Operation status	Phenomenon	Adjusting method	Adjustment item
Power running	Speed change ratio is a negative value.	Increase motor parameter R2 gradually (up to set parameter × 1.2).	H021/H221/H031
	Speed change ratio is a positive value.	Reduce motor parameter R2 gradually (down to set parameter × 0.8).	H021/H221/H031
Regeneration	Insufficient torque at low frequency (several Hz)	Increase motor parameter R1 gradually (up to set parameter × 1.2).	H020/H220/H030
		Increase motor parameter Io gradually (up to set parameter × 1.2).	H023/H223/H033
During startup	Shock occurs during startup.	Reduce motor parameter J from the set parameter.	H024/H224/H034
During deceleration	Motor hunting	Reduce the speed response.	H005/H205
		Reduce motor parameter J from the set parameter.	H024/H224/H034
Immediately after deceleration	Overcurrent or overvoltage protection is activated.	Reduce motor parameter Io gradually (down to set parameter × 0.8).	H023/H223/H033
		Set AVR selection A081 to "00" (always ON) or "01" (always OFF).	A081
Low-frequency operation	Rotation is not constant.	Increase motor parameter J from the set parameter.	H024/H224/H034
Related functions		A001, A044/A244, F001, b040, b041 to b044, H002/H202, H003/H203, H004/H204, H005/H205, H020/H220, H021/H221, H022/H222, H023/H223, H024/H224, H050/H250, H051/H251, H052/H252, H060/H260, H061/H261	

Note 1: Make sure that the carrier frequency (b083) is not lower than 2.1 kHz. If the carrier frequency is at 2.1 Hz or lower, the Inverter does not operate normally.

Note 2: Set a torque limit value (b041 to b044), while keeping the value α, calculated with the following formula, at 200% or lower. Otherwise, the motor may burn out.
α = Torque limit set value × (Inverter capacity) / (Motor capacity)

(Example) If the Inverter capacity is 0.75 kW and the motor capacity is 0.4 kW, the torque limit set value for α = 200%, calculated with the above formula, is as follows: Torque limit set value (b041 to b044) = α × (Motor capacity) / (Inverter capacity) = 200% × (0.4 kW)/(0.75 kW) = 106%

Torque Monitor Function

- This function allows you to monitor an estimated motor output torque, when "sensorless vector control", "0-Hz sensorless vector control", or "sensor vector control" is selected as the control method.

Parameter No.	Function name	Data	Default setting	Unit
A044/A244	V/f characteristics selection	03: Sensorless vector 04: 0-Hz sensorless vector 05: Sensor vector (A244 is blank.)	00	—
C027 C028 C029	MP selection AM selection AMI selection	02: Output torque 11: Output torque (signed) (C028 only)	00	—
H003/H203	Motor capacity selection	0.20 to 160.0	Factory default	kW
H004/H204	Motor pole number selection	2/4/6/8/10	4	Pole

- To use the monitor via the Digital Operator, select display code d012.
- To use the monitor with a signal from the control terminal block, refer to "Digital MP Terminal" (page 4-106) or "Analog Output AM/AMI Terminals" (page 4-107).
- If "VC", "special VP", or "free V/f setting" is selected in V/f characteristics selection A044/A244, this function is disabled, and the display or the output signal from the control terminal block is not defined.
- For a torque monitor value of this function, the output torque at the rated frequency equivalent to the motor's output rating during synchronous rotation is indicated as 100%.
- Since this function estimates output torque based on the motor current, the accuracy is approx. 20% when a motor with the same output capacity as the Inverter is used.

Preliminary Excitation Function (FOC)

- This function supplies excitation current from an input terminal to establish magnetic flux preliminarily, when "03" (sensorless vector control), "04" (0-Hz sensorless vector control), or "05" (sensor vector control) is selected in V/f characteristics selection A004/A244.
- Allocate 55 (FOC) to the desired multi-function input.
- The Inverter does not accept the RUN command unless the FOC terminal is turned on when FOC is allocated.
- If the FOC terminal is turned off during operation, the Inverter goes into free-run status. If the FOC terminal is turned on again, the Inverter restarts according to the setting of free-run stop selection b088.

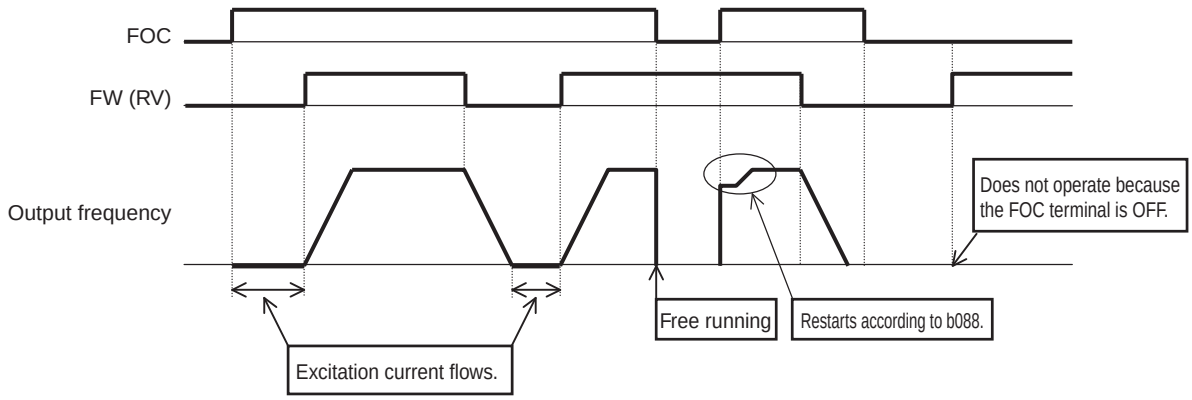

Related functions	A044/A244, C001 to C008

High-torque Multi-operation

- When "sensorless vector control" or "0-Hz sensorless vector control" is selected with a single Inverter, this function controls two motors of the same type to drive a single load.
- To use this function, you set the same parameters as when you select "Sensorless Vector Control" (page 4-113) or "0-Hz Sensorless Vector Control" (page 4-114). However, set the motor parameters as follows:
  - Set motor parameters R1, R2, and L to one half of the set value for one motor.
  - Set motor parameter Io to be twice the set value for one motor.
  - Set motor parameter J to one half of the total moment of inertia of two motors and loads connected to these motors.
  - Select the motor capacity value closest to the total capacity of two motors.

- When different loads are driven with two motors, a fluctuation in one load affects the operating condition of the other, which may hinder normal control.
  To prevent this, be sure to operate a system in a way that the load driven by two motors is regarded as one load.

Related functions	A044/A244, F001, b040, b041 to b044, H002/H202, H003/H203, H004/H204, H005/H205, H020/H220, H021/H221, H022/H222, H023/H223, H024/H224, H050/H250, H051/H251, H052/H252

Stabilization Parameter

- This function adjusts to reduce motor hunting.
- In case of motor hunting, check whether motor capacity H003/H203 and motor pole number selection H004/H204 match your motor. If they do not, match them. If the motor's primary resistance is smaller than that of the standard motor, increase the H006/H206/H306 set value gradually. To run a motor with a capacity larger than the Inverter's rated capacity, reduce the set value.
- Other than this function, the following methods are suggested to reduce hunting:
  Lower the carrier frequency (b083). (Refer to page 4-65.)
  Lower the output voltage gain (A045). (Refer to page 4-24.)

Parameter No.	Function name	Data	Default setting	Unit
H006/H206/H306	Stabilization parameter	0. to 255.: If hunting occurs, adjust the set value.	100.	—
A045	Output voltage gain	20. to 100.: If hunting occurs, reduce the set value.	100	%
b083	Carrier frequency	0.5 to 15.0: If hunting occurs, reduce the set value.	5.0	kHz

4-3 Functions When Option PG Board (3G3AX-PG01) Is Used

Functions That Need 3G3AX-PG01

- Generally, the Feedback Option Board (3G3AX-PG01) is required for the following two cases:
  - "05" (V2: sensor vector control) is selected in V/f characteristics selection A044.
  - "Pulse train frequency input" is selected in any of the following parameters:
- "06" (pulse train frequency) is selected in frequency reference selection A001.
- With "10" (operation function result) selected in frequency reference selection A001, "07" (pulse train frequency) is selected in operation frequency input A setting (A141) or operation frequency input B setting (A142).
- "03" (pulse train frequency) is selected in PID feedback selection A076.
- When running the Inverter with V/f characteristics selection A044 set to "00" (VC), you can check the rotation direction with real frequency monitor d008.
  (If positive frequency is detected when the forward command is activated, or if negative frequency is detected when the reverse command is activated, the rotation direction is judged as being normal.)

Related functions	A044, A001, A076, A141, A142

V2 Control Mode Selection

Select a control method in V2 control mode selection P012.

When "00" (ASR) is selected in P012, speed control mode is enabled. Select a frequency reference in frequency reference selection A001.
When "01" (APR) is selected in P012, the Inverter enables position control by generating frequency reference based on the position command pulse input from the pulse train position command input terminal, and on the position feedback detected by the encoder.

Select any of the three pulse train position command input modes in pulse train mode selection P013.
To perform pulse train position control, allocate "48" (STAT) to any of the multi-function input terminals. While the STAT terminal is tuned on, pulse train position command input is accepted.

Position deviation can be cleared through external input. Allocate "47" (PCLR) to any of the multi-function input terminals. Tuning on and then off the PCLR terminal can clear position deviation data.
Allocate "22" (DSE) to any of the multi-function output terminals to enable excessive speed deviation signal output.
Set a deviation level in speed deviation error detection level P027. When the deviation between real frequency and reference frequency exceeds the P027 set value, the DSE signal turns on.
When "02" (APR2) or "03" (HAPR) is selected in P012, the Inverter performs absolute position control with reference to the absolute position from its origin.

Parameter No.	Function name	Data	Default setting	Unit
P012	V2 control mode selection	00: ASR (speed control mode) 01: APR (pulse train position control mode) 02: APR2 (absolute position control mode) 03: HAPR (high-resolution absolute position control mode)	00	—
P011	Encoder pulses	128. to 9999./1000 to 6553 (10000 to 65535): Number of encoder pulses	1024.	Pulse
P023	Position loop gain	.00 to 99.99/100.0: Position loop gain	0.50	rad/s
P027	Speed deviation error detection level	0.00 to 99.99/100.0 to 120.0: DSE signal output level	7.50	Hz
H004	Motor pole number selection	2/4/6/8/10: Select the number of motor poles.	4	Pole
C001 to C008	Multi-function inputs 1 to 8 selection	47: PCLR (position deviation clear) 48: STAT (pulse train position command input permission)	—	—
C021 to C025	Multi-function output terminals P1 to P5 selection	22: DSE (excessive speed deviation)	—	—
C026	Relay output (MA, MB) function selection		05	
Related functions		A001, P013		

Sensor Vector Control (Speed Control)

To use this function, set V/f characteristics selection A044 to "05" (V2), and V2 control mode selection P012 to "00" (speed control).
("Sensor vector control" can be selected for 1st control only.)

To use this function, make sure that the motor parameter settings are suitable for your motor. Refer to Inverter model 3G3RX user's manual "Chapter 4 Functions, 4-2 Function Mode, Motor Parameter Selection".
Also, be sure to set the number of your encoder pulses.

With V2 control mode selection P012, you can select four types of control modes: Speed control, Pulse train position control, Absolute position control, and High-resolution absolute position control. Note the following before use:

- Sufficient characteristics may not be obtained if you select a motor size two or more ranks lower than the maximum applicable motor size.
- If the Inverter does not normally accelerate, or if overload protection is activated, check the phase order of the encoder signal.
  (If phase A is advanced by 90° from phase B during forward run, it is judged as being normal.)
  When running the Inverter with V/f characteristics selection A044 set to "00" (VC), you can check the rotation direction with real frequency monitor d008.
  (If positive frequency is detected when the forward command is activated, or if negative frequency is detected when the reverse command is activated, the rotation direction is judged as being normal.)

If sensor vector control cannot provide the desired characteristics, adjust the motor parameters depending on the phenomena, as shown in the table below.

Operation status	Phenomenon	Adjusting method	Adjustment item
During startup	Shock occurs during startup.	Reduce motor parameter J from the set parameter.	H024/H034
During deceleration	Motor hunting	Reduce the speed response.	H005
		Reduce motor parameter J from the set parameter.	H024/H034
During torque limit	Insufficient torque at low frequency during torque limit	Set a overload limit level lower than that of the torque.	b021 b041 to b044
Low-frequency operation	Rotation is not constant.	Increase motor parameter J from the set parameter.	H024/H034
Related functions		A001, A044, F001, b040 , H002, H003, H004 , H020 , H021 , H022 , H023 , H050 , H051 , H052 , P011, P012	

Note 1: Make sure that the carrier frequency (b083) is not lower than 2.1 kHz. If the carrier frequency is at 2.1 Hz or lower, the Inverter does not operate normally.

Note 2: To use a lower rank motor size than the Inverter, set a torque limit value (b041 to b044), while keeping the value α, calculated with the following formula, at 200% or lower. Otherwise, the motor may burn out.
α = Torque limit set value × (Inverter capacity) / (Motor capacity)
(Example) If the Inverter capacity is 0.75 kW and the motor capacity is 0.4 kW, the torque limit set value for α = 200%, calculated with the above formula, is as follows:
Torque limit set value (b041 to b044) = α × (Motor capacity) / (Inverter capacity)
= 200% × (0.4 kW)/(0.75 kW) = 106%

Torque Bias Function

This function applies bias to the torque reference generated by speed control, and is useful for elevating applications (e.g. elevator).

Parameter No.	Function name	Data	Default setting	Unit
P036	Torque bias mode	00: Disabled 01: Set via the Digital Operator 02: Set via terminal FE *1	00	—
P037	Torque bias value	-200. to +200. (0.4 to 55 kW) -180. to +180. (75 to 132 kW) Enabled when P036 = 01	0.	%
P038	Torque bias polarity selection *2	00: As per sign 01: Depends on the RUN direction	00	—
Related functions	d010			

*1. When torque bias is set to the FE terminal, -10 to +10 (V) is recognized as -200 to +200 (%).

*2. • When "00" (As per sign) is selected:
When the polarity of a torque bias signal is (+), the torque increases for forward rotation, and when it is (-), the torque increases for reverse rotation, regardless of the RUN direction.
• When "01" (Depends on the RUN direction) is selected:
The torque bias signal polarity and torque bias direction vary depending on the RUN command direction.
Forward command: Applies torque in the same direction as the torque bias.
Reverse command: Applies torque in the opposite direction of the torque bias.

Torque Control

Under this function, the Inverter can be used in torque control, as well as in the speed and pulse train position controls.
Torque control can be applied to winders, and more.

To run the Inverter in torque control mode, allocate "52" (ATR) to any of the multi-function inputs. While the ATR terminal is turned on, the torque reference input is enabled.

In torque reference input selection P033, you can select one of the three analog inputs or the input via the Digital Operator.

The torque control speed depends on the balance between torque and load. To prevent the Inverter from running out of control, set a speed limit value in P039 (forward) or P040 (reverse).

Parameter No.	Function name	Data	Default setting	Unit
P033	Torque reference input selection	00: Input via terminal FV 01: Input via terminal FI 02: Input via terminal FE 03: Input via the Digital Operator	00	—
P034	Torque reference setting	0. to 200. (0.4 to 55 kW) 0. to 180. (75 to 132 kW) Torque reference when P033 = 03	0.	%
P035	Polarity selection at torque reference via FE	00: As per sign 01: Depends on the RUN direction	00	-

Parameter No.	Function name	Data	Default setting	Unit
P039	Speed limit value in torque control (forward)	0.00 to 99.99/100.0 to 400.0	0.00	Hz
P040	Speed limit value in torque control (reverse)	0.00 to 99.99/100.0 to 400.0	0.00	Hz
P036	Torque bias mode	00: Disabled 01: Set via the Digital Operator 02: Set via terminal FE	00	—
P037	Torque bias value	-200. to +200. (0.4 to 55 kW) -180. to +180. (75 to 132 kW) Enabled when P036 = 01	0.	%
P038	Torque bias polarity selection	00: As per sign 01: Depends on the RUN direction	00	—
C001 to C008	Multi-function inputs 1 to 8 selection	52: ATR (torque reference input permission)	—	—
Related functions	d009, d010, d012			

Control Block Diagram

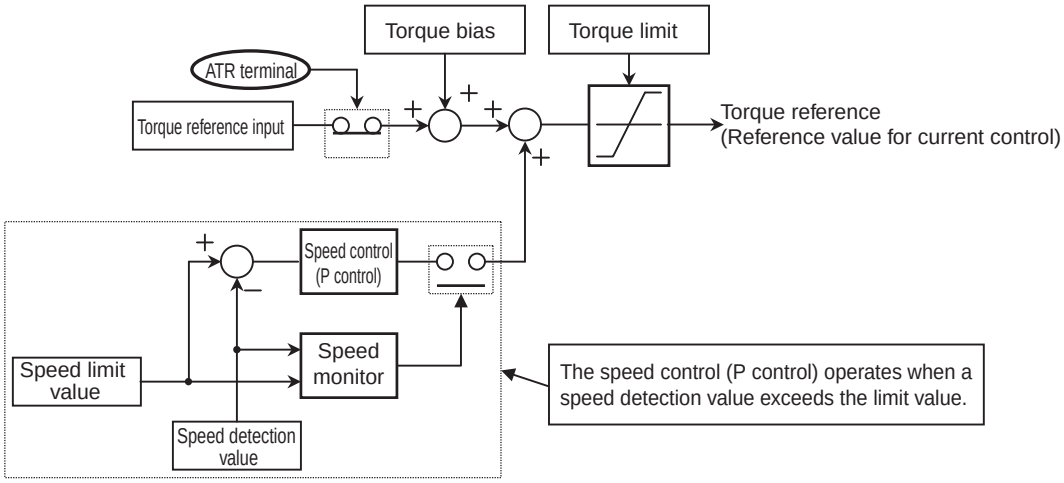

Pulse Train Position Control Mode

To use this function, set V/f characteristics selection A044 to "05" (V2), and V2 control mode selection P012 to "01" (pulse train position control).
("Sensor vector control" can be selected for 1st control only.)
Select a pulse train position command input mode in pulse train mode selection P013.

Parameter No.	Function name	Data	Default setting	Unit
P012	V2 control mode selection	01: APR (pulse train position control mode)	00	—
P013	Pulse train mode selection	00: Mode 0 (pulse train with 90° phase difference) 01: Mode 1 (forward/reverse command + pulse train) 02: Mode 2 (forward pulse train + reverse pulse train)		

Parameter No.	Function name	Data	Default setting	Unit
P017	Position ready range setting	0. to 9999./1000 (10000): Set a value equivalent to encoder ×4 multiplication.	5.	—
P018	Position ready delay time setting	0.00 to 9.99	0.00	s
P019	Electronic gear setting position selection	00: FB (feedback side) 01: REF (command side)	00	—
P020	Electronic gear ratio numerator	1. to 9999.	1.	—
P021	Electronic gear ratio denominator	1. to 9999.	1.	—
P022	Position control feedforward gain	0.00 to 99.99/100.0 to 655.3	0.00	—
P023	Position loop gain	0.00 to 99.99/100.0	0.50	rad/s
P024	Position bias amount	-204 (-2048)/-999. to 2048.	0.	—
C001 to C008	Multi-function inputs 1 to 8 selection	47: PCLR (position deviation clear) 48: STAT (pulse train position command input permission)	—	—

Frequency reference for the pulse train position control mode is calculated with the following formula:

$$\text{Frequency reference (Hz)} = \frac{6.4 \times P \times Kv}{ENC} \times \frac{\Delta P}{255}$$

P	: Number of motor poles
Kv	: Position loop gain
ENC	: Number of encoder pulses
ΔP	: Position deviation

In the position control mode, the acceleration/deceleration time settings are disabled. (The Inverter is automatically brought into LAD cancel status.)
The higher the position loop-back gain, the shorter the acceleration/deceleration time.

For details on the pulse train input mode, refer to the following.

•Mode 0: Pulse train with 90° phase difference

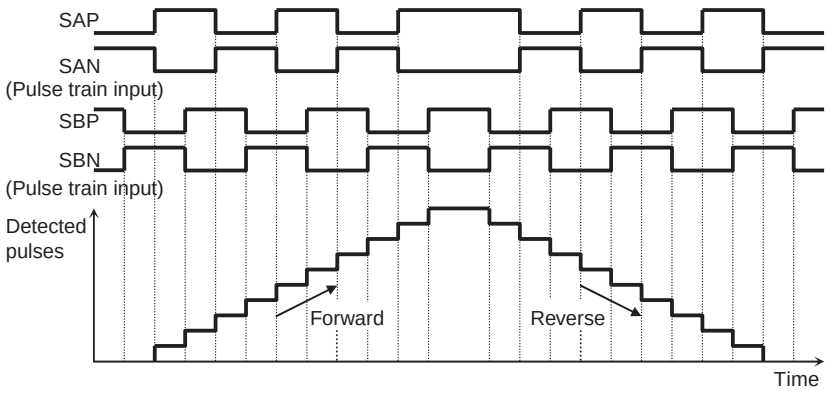

•Mode 1: Forward/Reverse command + Pulse train

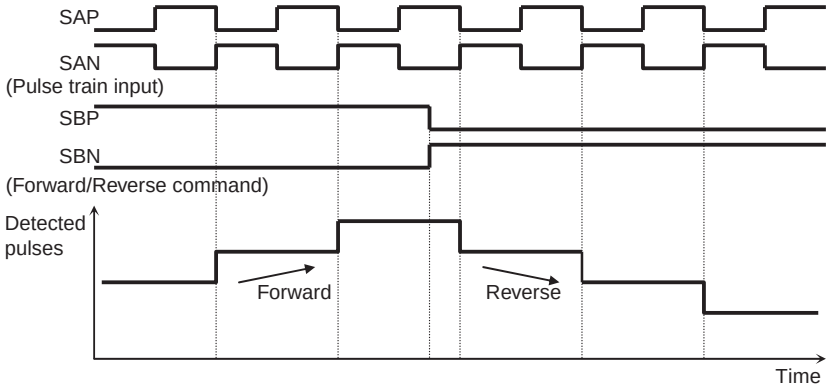

•Mode 2: Forward pulse train + Reverse pulse train

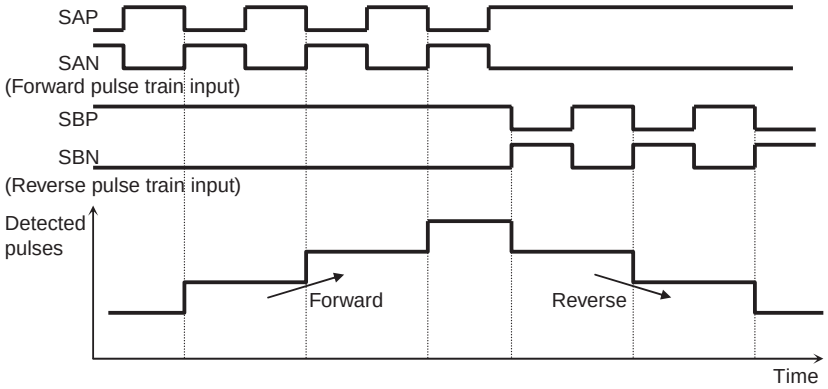

Electronic Gear Function

This function allows you to set a gain relative to position command or position feedback and to change the main/sub motor rotation ratio, particularly for synchronous operation.

Parameter No.	Function name	Data	Default setting	Unit
P019	Electronic gear setting position selection	00: Position feedback side (FB) 01: Position command side (REF)	00	—
P020	Electronic gear ratio numerator *3	1 to 9999	1.	—
P021	Electronic gear ratio denominator *3	1 to 9999	1.	—
P022	Position control feedforward gain *1	0.00 to 655.3	0.00	—
P023	Position loop gain *2	0.00 to 99.99/100.0	0.50	rad/s

Note: Below are the block diagrams of the electronic gear function.

P019 = 00 (FB)	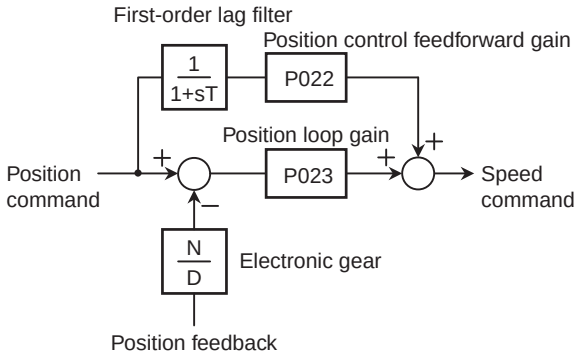
P019 = 01 (REF)	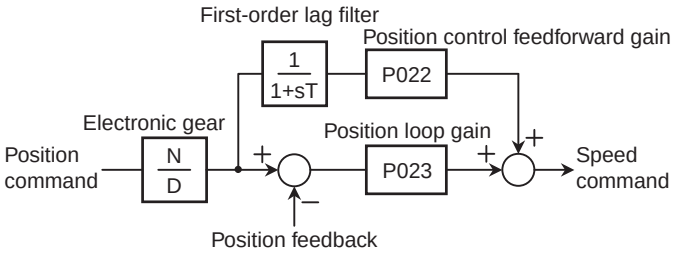

*1. It is recommended that position control feedfoward gain adjustment should be started with P022 = 2.00. To reduce the position deviation between the main and sub motors, increase the feedforward gain. If motor hunting occurs, reduce the feedforward gain.

*2. It is recommended that position loop gain adjustment should be started with P023 = 2.00. To increase positioning accuracy and holding power, increase the position loop gain. If an increased position loop gain causes hunting, reduce the position loop gain.

*3. Make sure that the N/D setting is within the range of $1/50 \leq N/D \leq 20$.
(N: Electronic gear ratio numerator [P020], D: Electronic gear ratio denominator [P021])

Example: Synchronous Operation

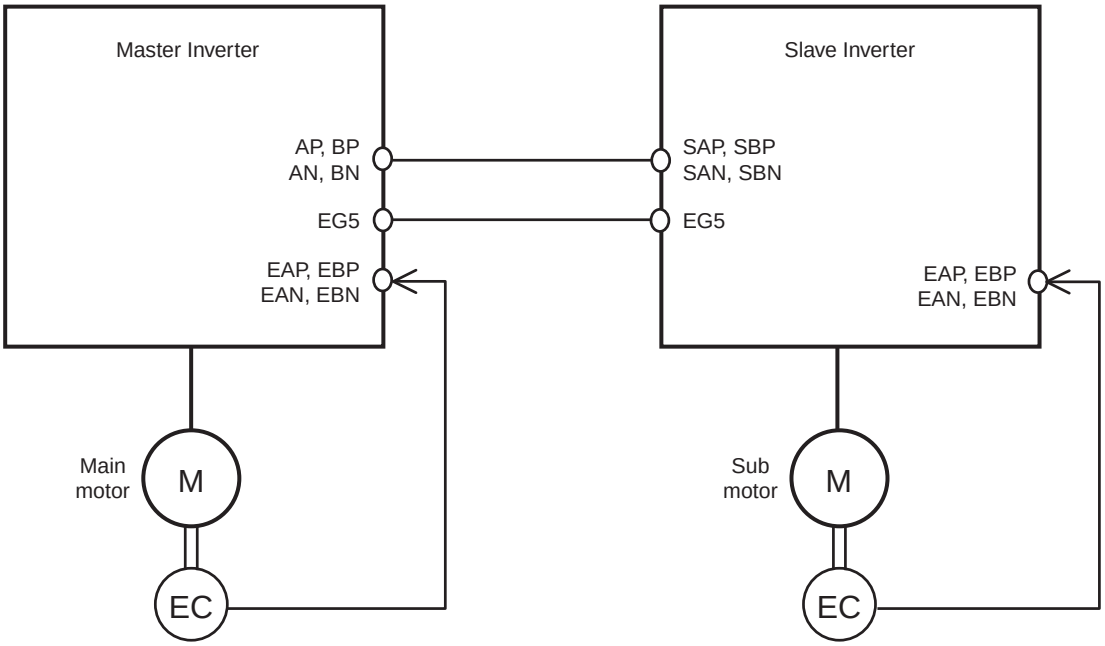

For the Inverter (master Inverter) on the main motor side, you can select either the speed control or pulse train position control mode.
For the Inverter (slave Inverter) on the sub motor side, you need to select the pulse train position control mode.

Configuration Example

- Main motor : Number of encoder pulses = 1024
- Sub motor : Number of encoder pulses = 3000
- Main motor rpm:Sub motor rpm = 2:1

For operation under the above conditions, set the following data in the slave Inverter.

Pulse train mode selection (P013) : 00 (pulse with 90° phase difference)
Electronic gear setting position selection (P019) : 01 (REF)
Electronic gear ratio numerator (P020) : 3000
Electronic gear ratio denominator (P021) : 1024 × 2 = 2048

The following shows an example of the ratio of slave rpm to master rpm depending on the P019 to P021 settings.
(Note that the same number of encoder pulses (1024 pulses) should be set on both Inverters.)

Electronic gear setting position selection (P019)	REF (Position command side)	REF (Position command side)	FB (Position feedback side)	FB (Position feedback side)
Electronic gear ratio numerator (P020)	1024	2048	1024	2048
Electronic gear ratio denominator (P021)	2048	1024	2048	1024
Slave rpm/Master rpm	1/2	2	2	1/2

Configuration Example

- Main motor : Number of encoder pulses = 1024
- Sub motor : Number of encoder pulses = 3000
- Main motor rpm:Sub motor rpm = 2:1

For operation under the above conditions, set the following data in the slave Inverter.

Electronic gear setting position selection (P019) : 01 (REF)
Electronic gear ratio numerator (P020) : 3000
Electronic gear ratio denominator (P021) : 1024 × 2 = 2048

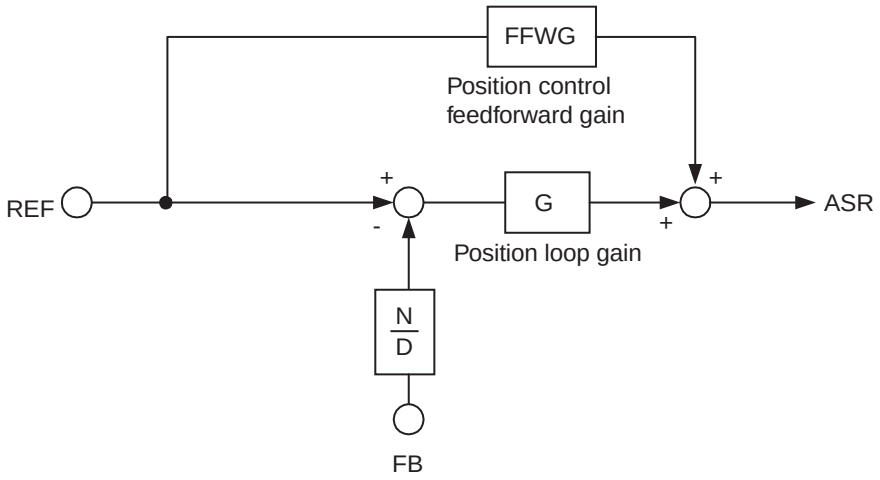

Electronic gear setting position =00(FB) selected

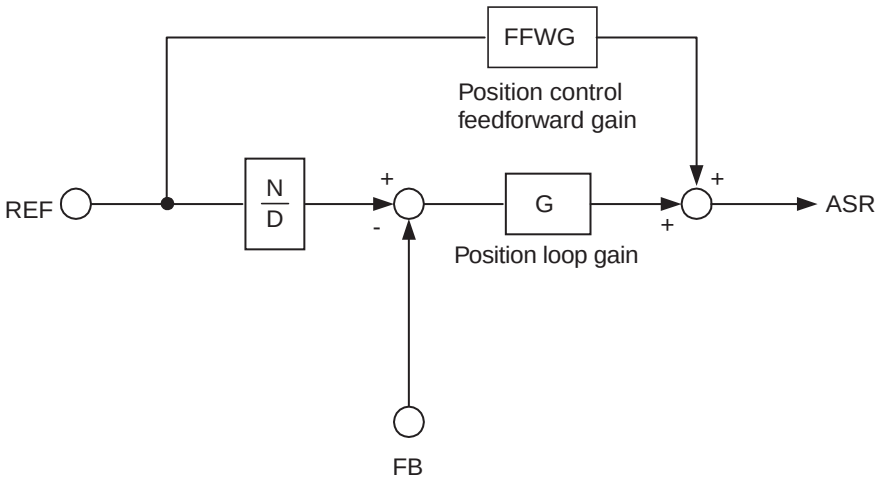

Electronic gear setting position =01(REF) selected

Motor Gear Ratio Setting Function

This function is useful for a system with an optional encoder installed on the machine side.

Set the number of actual encoder pulses in encoder pulses P011.
Set a motor-to-encoder rpm ratio in motor gear ratio numerator/denominator P028/P029.
With the above settings, the number of encoder pulses converted into motor shaft data is set in the Inverter.
This function performs speed/position detection based on the number of encoder pulses converted into motor shaft data and calculates the orientation stop position based on the number of encoder pulses (P011).

Parameter No.	Function name	Data	Default setting	Unit
P028	Motor gear ratio numerator	0. to 9999 Set a motor-to-encoder rpm ratio.	1.	—
P029	Motor gear ratio denominator			
P011	Encoder pulses	128. to 9999./1000 to 6553 (10000 to 65535) Set the number of actual encoder pulses.	1024.	Pulse

Note: Make sure that the N/D setting is within the range of $1/50 \leq N/D \leq 20$.
(N: Motor gear ratio numerator, D: Motor gear ratio denominator)

<Example>

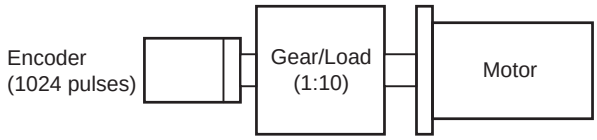

- When the motor-to-encoder rpm ratio is 1:10, set the following data:
  Number of encoder pulses (P011) : 1024
  Motor gear ratio numerator (P028) : 10
  Motor gear ratio denominator (P029) : 100

In this case, the orientation stop position is defined as 4096 divisions of the encoder's one rotation.
Note that the concept of the stop position is inverted from the description in "Orientation stop position conceptual drawing" (page 4-130).

Position Bias Function

Set this function to apply position command bias in the pulse train position control mode.

The set number of pulses is added to a change value at 2-ms internals. This is used for adjusting the phase of synchronization points during synchronous operation.
Set an addition value in position bias amount P024. A positive value adds the value in the forward direction.

Related functions	P024

Speed Bias Function

This function applies speed command bias in the pulse train position control mode.

Set a bias value in frequency addition amount A145, and select a sign in frequency addition direction A146.
Allocate 50 (ADD) to any of the multi-function inputs. While the ADD terminal is turned on, the bias value is added to the speed command.

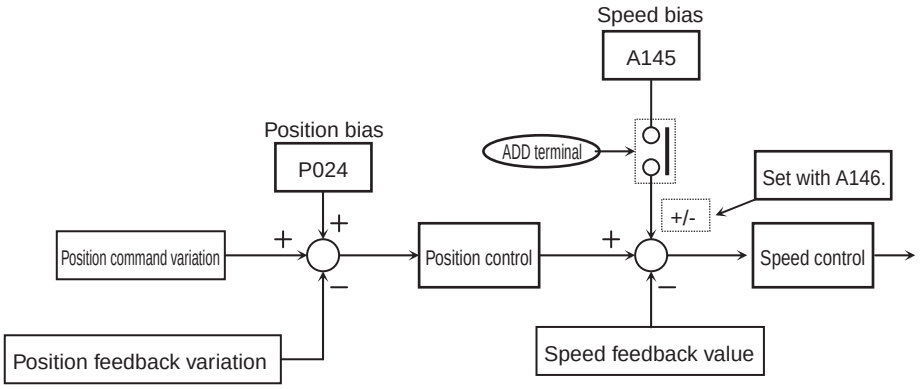

Related functions	A145, A146

Orientation Function

This function determines a motor position at a single desired point during one rotation of the motor, and can be used to exchange tools for the machine tool main spindle or others.

During positioning, the Z-pulse (one rotation position signal) is used as the reference signal. Input Z-pulse between EZP and EZN.

Parameter No.	Function name	Data	Default setting	Unit
P011	Encoder pulses	128. to 9999./1000 to 6553 (10000 to 65530)	1024.	Pulse
P014	Orientation stop position	0. to 4095.	0.	—
P015	Orientation speed setting	0.00 to 99.99/100.0 to 120.0	5.00	Hz
P016	Orientation direction setting	00: Forward side 01: Reverse side	00	
P017	Position ready range setting	0. to 9999./ 1000 (10000)	5.	Pulse
P018	Position ready delay time setting	0.00 to 9.99	0.00	s
P023	Position loop gain	0.00 to 99.99/100.0	0.50	rad/s
C001 to C008	Multi-function inputs 1 to 8 selection	45: ORT (orientation)	—	—
C021 to C025	Multi-function output terminal selection	23: POK (position ready)	—	
C026	Relay output (MA, MB) function selection		05	

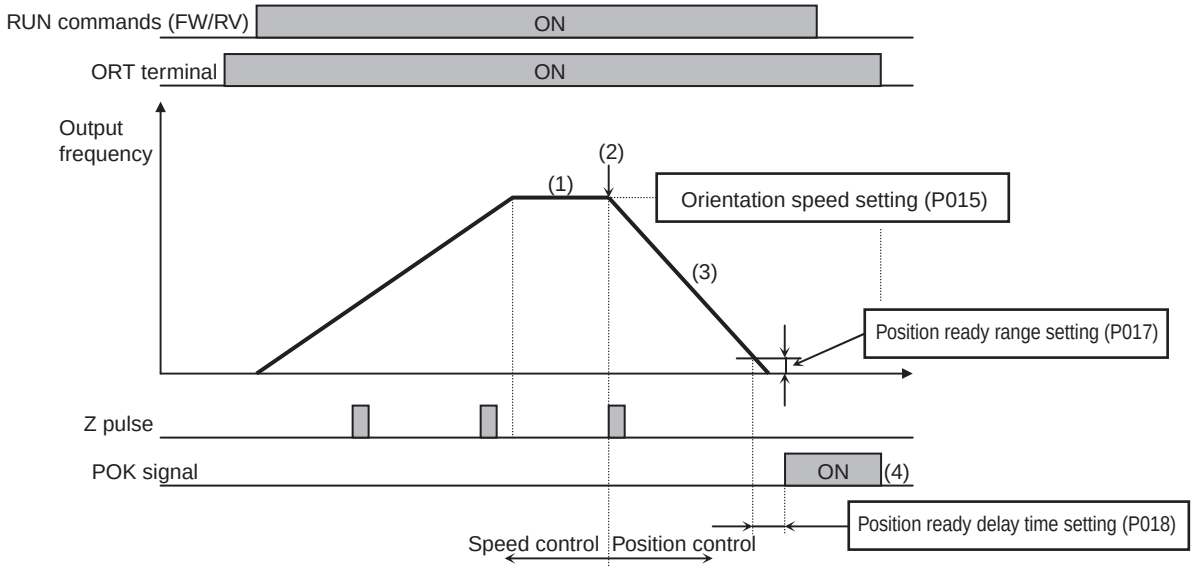

(1) When the RUN command is turned on with the ORT terminal turned on, the Inverter accelerates to the orientation speed (P015), and then performs constant speed operation.
(If the RUN command is turned on during operation, the operation speed changes to the orientation speed when the ORT terminal is turned on.)

(2) After the orientation speed is reached, the Inverter shifts to the position control mode when the first Z-pulse is detected.

(3) During forward run, position control is performed with a target value of "Orientation stop position (P014) + one rotation"; During reverse run, with a target value of "Orientation stop position (P014) + two rotations".
In this step, the higher the position loop gain (P023), the shorter the deceleration time (regardless of the deceleration time setting).

(4) After the remaining number of pulses reaches the position ready range setting (P017), the Inverter outputs the POK signal after the position ready delay time setting (P018) elapses. (The POK output remains until the ORT signal is turned off.)
After positioning is completed, the servo lock status remains until the RUN command is turned off.

Note 1: Do not set a high frequency for the orientation speed, because positioning must be completed within two rotations during deceleration. Otherwise, overvoltage protection may cause a trip.

Note 2: Orientation stop position is defined as 4096 (0 to 4095) divisions of one forward rotation from the reference point. (The number of divisions is fixed to 4096, regardless of the encoder's number of pulses.)
The reference point is defined as the point where the pulse is input between EZP and EZN. Below is the layout of the stop target position. (Positive-phase connection)

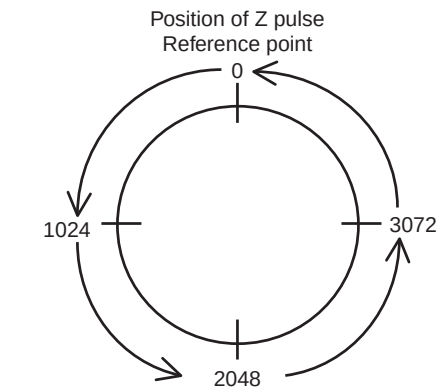

Orientation stop position conceptual drawing

Absolute Position Control Mode

- To use this function, set V/f characteristics selection A044 to "05" (V2), and V2 control mode selection P012 to "02" (APR2: Absolute position control).
- When "03" (high-resolution absolute position control) is selected in V2 control mode selection P012, control is based on ×4 the number of pulses used for internal operations.
  (Set the multi-step position command and position range setting for ×4 multiplication control.)
- The position command can be changed up to 8 steps, depending on combinations of multi-function input terminals.
- Zero return speed can be selected from one low speed and two high speeds.
  (The orientation function, described in the previous section, is not available.)
- By using the teaching function, you can set the position command while running the machine.
- By allocating "73" (SPD) to a multi-function input, you can switch between the speed and position controls.
- For data with many digits (e.g. position command), only the higher 4 digits are displayed.

Parameter No.	Function name	Data	Default setting	Unit
P012	V2 control mode selection	02: APR2 (absolute position control) 03: HAPR (high-resolution absolute position control)	00	—
P023	Position loop gain	0.00 to 99.99/100.0	0.50	rad/s
P060	Multi-step position command 0	Position range setting (reverse side) to Position range setting (forward side)	0	—
P061	Multi-step position command 1	Position range setting (reverse side) to Position range setting (forward side)	0	—
P062	Multi-step position command 2	Position range setting (reverse side) to Position range setting (forward side)	0	—
P063	Multi-step position command 3	Position range setting (reverse side) to Position range setting (forward side)	0	—
P064	Multi-step position command 4	Position range setting (reverse side) to Position range setting (forward side)	0	—
P065	Multi-step position command 5	Position range setting (reverse side) to Position range setting (forward side)	0	—
P066	Multi-step position command 6	Position range setting (reverse side) to Position range setting (forward side)	0	—
P067	Multi-step position command 7	Position range setting (reverse side) to Position range setting (forward side)	0	—
P068	Zero return mode	00: Low 01: Hi1 02: Hi2	00	—
P069	Zero return direction selection	00: Forward side 01: Reverse side	00	—
P070	Low-speed zero return frequency	0.00 to 10.00	0.00	Hz
P071	High-speed zero return frequency	0.00 to 99.99/100.0 to 400.0	0.00	Hz
P072	Position range specification (forward)	0 to +268435456: When APR2 is selected 0 to +1073741823: When HAPR is selected	268435455	—

Parameter No.	Function name	Data	Default setting	Unit
P073	Position range specification (reverse)	–268435456 to 0: When APR2 is selected –1073741823 to 0: When HAPR is selected	–268435455	—
P074	Teaching selection	00: Multi-step position command 0 (P060) 01: Multi-step position command 1 (P061) 02: Multi-step position command 2 (P062) 03: Multi-step position command 3 (P063) 04: Multi-step position command 4 (P064) 05: Multi-step position command 5 (P065) 06: Multi-step position command 6 (P066) 07: Multi-step position command 7 (P067)	00	—
C169	Multi-step speed/position determination time	0. to 200.: × 10 ms	0	ms
d029	Position command monitor	–1073741823 to +1073741823	—	—
d030	Current position monitor	–1073741823 to +1073741823	—	—
C001 to C008	Multi-function inputs 1 to 8 selection	45: ORT (orientation) 54: SON (servo ON) 66: CP1 (position command selection 1) 67: CP2 (position command selection 2) 68: CP3 (position command selection 3) 69: ORL (zero return limit signal) 70: ORG (zero return startup signal) 71: FOT (forward driving stop) 72: ROT (reverse driving stop) 73: SPD (speed/position switching)	—	—
C102	Reset selection	03: Does not initialize internal data during reset.	0	—

Absolute Position Control Operation

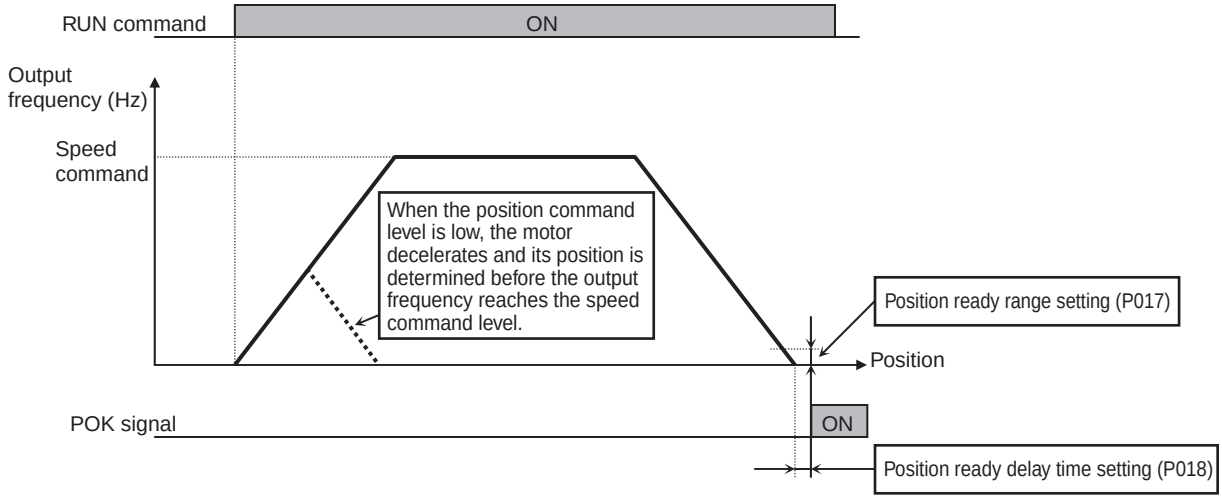

In the absolute position control mode, the Inverter moves to the target position according to the following parameter settings, and is then set in the position servo lock status.
• Position command
• Speed command (frequency reference)
• Acceleration/Deceleration time
(The servo lock status is retained until the RUN command is turned off.)

The frequency reference and acceleration/deceleration command for absolute position control conform to the items selected when the RUN command is turned on.
If the position command is set to a low value, the Inverter may stop deceleration and perform positioning before the speed command value is reached.
In the absolute position control mode, the direction of RUN command (FW or RV) does not refer to the rotating direction. The FW or RV signal starts or stops the Inverter. The Inverter runs forward when "Target position - Current position" is a positive value, or runs in reverse when it is a negative value.
If you do not perform zero return operation, (to be described later), the position at power-on is regarded as the origin (position = 0).
When position command is set to "0", positioning is performed when the RUN command is turned on.
In reset selection C102, select "03" (trip reset only).
* If reset selection C102 is not set to "03", turning on the Inverter's reset terminal (or RESET key) clears the current position counter. To operate the Inverter by using the current position count value after resetting a trip by turning on the reset terminal (or RESET key), be sure to set reset selection C102 to "03".
If PCLR is allocated, turning on the PCLR terminal clears the current position counter.
(The internal position deviation counter is simultaneously cleared.)
The absolute position control mode disables the ATR terminal. (Torque control is disabled.)
The absolute position control mode disables the STAT terminal. (Pulse train position control is disabled.)
The absolute position control mode disables the orientation function.
(However, the ORT terminal is used for teaching, as described later.)

Multi-step Position Switching Function (CP1/CP2/CP3)

By allocating "66" to "68" (CP1 to CP3) to any of multi-function inputs 1 to 8 (C001 to C008), you can select multi-step positions 0 to 7.

Set position commands in multi-step position commands 0 to 7 (P060 to P067).
If no position command is allocated to the terminals, multi-step position command 0 (P060) is defined as the position command.

Position command	CP3	CP2	CP1
Multi-step position 0	0	0	0
Multi-step position 1	0	0	1
Multi-step position 2	0	1	0
Multi-step position 3	0	1	1
Multi-step position 4	1	0	0
Multi-step position 5	1	0	1
Multi-step position 6	1	1	0
Multi-step position 7	1	1	1

When you input a multi-step position command, you can set the wait time until the terminal input is determined. This prevents the transition status from being applied before it is determined.
You can adjust the determination time in multi-step speed/position determination time C169. If no input is made during the time set in C169, the data is determined after the set time elapses. (Note that the longer the determination time, the slower the input response.)

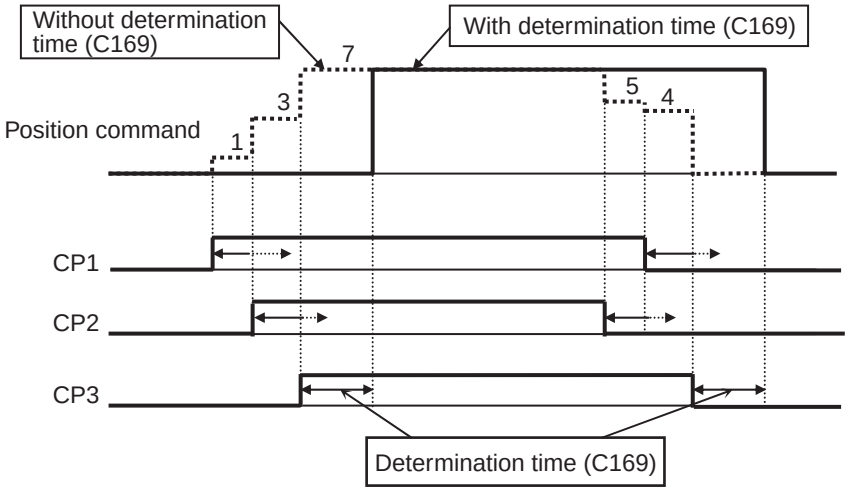

Speed/Position Switching Function (SPD)

Allocate 73 (SPD) to one of the multi-function inputs.
While the SPD terminal is turned on, the current position counter is retained at "0". Therefore, if the SPD terminal is turned off during operation, the Inverter shifts to the position control mode. (Speed/Position switching)
At this time, if the position command is "0", the Inverter immediately stops.
(Hunting may occur, depending on the position loop gain setting.)
While the SPD terminal is turned on, the Inverter runs in the direction based on the RUN command.

When shifting from speed control to position control, be careful about the polarity sign of the RUN command.

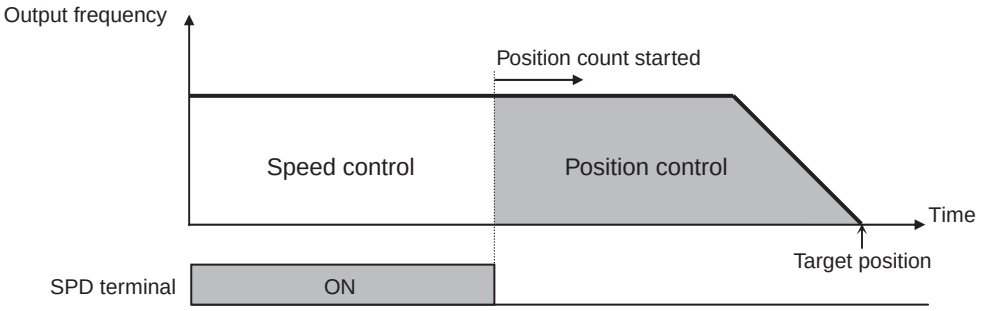

Zero Return Function

This function performs three types of zero return operations depending on the setting of zero return mode P068. When zero return is complete, the current position is cleared to zero.
You can select the zero return direction in zero return direction selection P069.
If zero return is not performed, the Inverter performs position control with the position at power-on defined as the origin.

<Low-speed zero return (P068 = 00)>

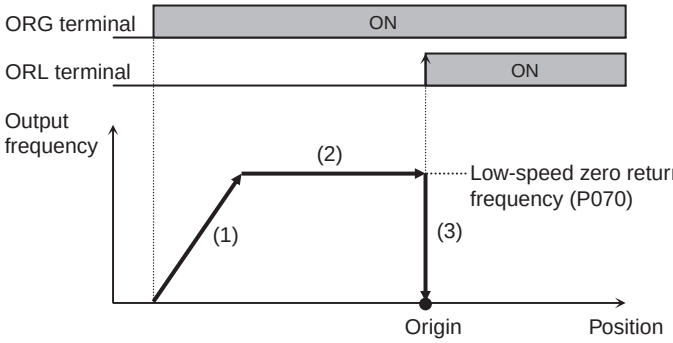

(1) The Inverter accelerates to the low-speed zero return frequency according to the acceleration time setting.
(2) The Inverter runs at the low-speed zero return speed.
(3) The Inverter performs positioning when the ORL signal is input.

<High-speed zero return 1 (P068 = 01)>

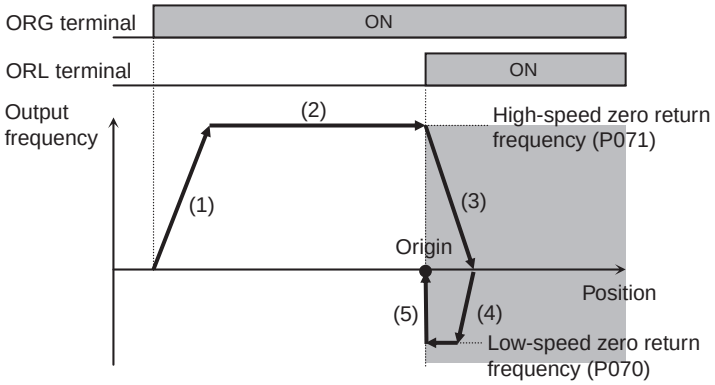

(1) The Inverter accelerates to the high-speed zero return frequency according to the acceleration time setting.
(2) The Inverter runs at the high-speed zero return frequency.
(3) The Inverter starts deceleration when the ORL signal is turned on.
(4) The Inverter runs in reverse at the low-speed zero return frequency.
(5) The Inverter performs positioning when the ORL signal is turned off.

<High-speed zero return 2 (P068 = 02)>

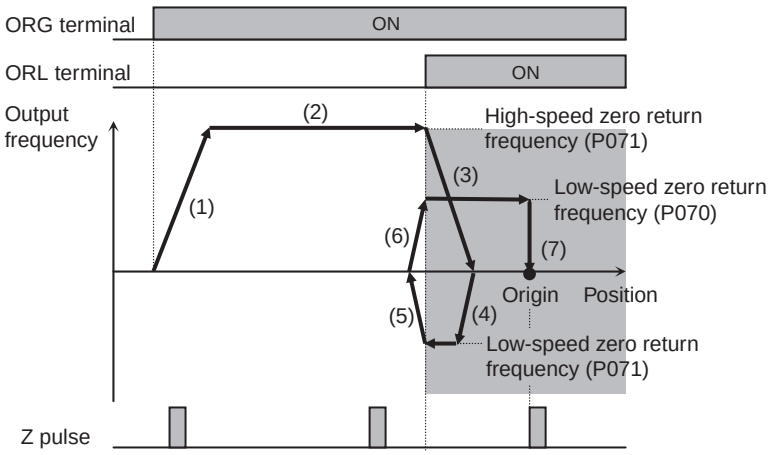

(1) The Inverter accelerates to the high-speed zero return frequency according to the acceleration time setting.
(2) The Inverter runs at the high-speed zero return frequency.
(3) The Inverter starts deceleration when the ORL signal is turned on.
(4) The Inverter runs in reverse at the low-speed zero return frequency.
(5) The Inverter starts deceleration when the ORL signal is turned off.
(6) The Inverter runs forward at the low-speed zero return frequency.
(7) The Inverter performs positioning at the first Z-pulse position after the ORL signal is turned on.

Forward/Reverse Run Stop Function (FOT/ROT)

With a signal from the control range limit switch, this function prevents the Inverter from running outside the specified operation range.
The torque limit is set to 10% on the forward side when the FOT terminal is turned on, and on the reverse side when the ROT terminal is turned on.
This function can be used as the limit switch at the machine end. To do so, allocate "71" (FOT) and "72" (ROT) to any of multi-function inputs 1 to 8 (C001 to C008).

Position Range Setting Function

Set a forward/reverse position control range in position range setting (forward) P072 and position range setting (reverse) P073. If the current position counter exceeds the setting range, a position control range trip (E63.* or E73.*) occurs, and the Inverter goes into free-run status.
The upper limit setting of multi-step position commands 0 to 7 (P060 to P067) is limited by this control range setting.
(You cannot set a position command beyond the position range.)

Teaching Function

This function starts or stops the motor at a desired position and stores the current position as a position command in a desired position command area.

Allocate "45" (ORT) to any of multi-function inputs 1 to 8 (C001 to C008).
When V2 control mode selection P012 is set to "02" (absolute position control) or "03" (high-resolution absolute position control), the relevant terminal serves as a teaching terminal.

Related functions	C001 to C008, P012, P074

<Teaching Procedure>
(1) In teaching selection P074, select the position command you want to set.
(2) Move the workpiece.
- Input the RUN command with the ORT terminal turned on. At this time, the speed command and acceleration/deceleration time conform to the currently selected parameters.

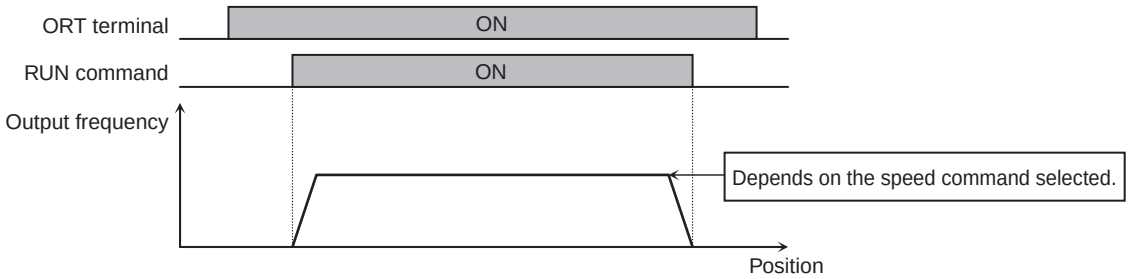

* If the Inverter control circuit (Ro, To) is turned on, teaching is enabled.
The current position counter operates even if the workpiece is moved by an external device.
Teaching is therefore enabled even while the Inverter is stopped.

Note: Make sure that the power supplies (R/L1, S/L2, T/L3) for the Inverter power circuit are shut off or that the Inverter's outputs (U/T1, V/T2, W/T3) are disconnected from the motor. Not doing so may result in injury and/or damage to the equipment.

(3) When the target position is reached, press the Enter key on the Digital Operator. Press the key on the data display screen (the PRG LED indicator is lit).

(4) The current position is set to the area corresponding to the position command source set in teaching selection P074.
(However, the P074 setting is not stored. After the power is shut off or after reset, this parameter is indicated as "00" (x00).)

P074 set values	Position commands to be set
00	P060: Multi-step position command 0
01	P061: Multi-step position command 1
02	P062: Multi-step position command 2
03	P063: Multi-step position command 3
04	P064: Multi-step position command 4
05	P065: Multi-step position command 5
06	P066: Multi-step position command 6
07	P067: Multi-step position command 7

Servo ON Function

This function brings the Inverter into speed servo lock status via an input terminal when "05" (sensor vector control) is selected in V/f characteristics selection A044.

Allocate 54 (SON) to the desired multi-function input.
The Inverter does not accept the RUN command unless the SON terminal is turned on when SON is allocated.
If the SON terminal is turned off during operation, the Inverter goes into free-run status. When the SON terminal is turned on again, the Inverter restarts according to the setting of free-run stop selection b088.

This function cannot be simultaneously used with the preliminary excitation function (55: FOC). If FOC and SON are both allocated to multi-function input terminals, priority is given to FOC, and SON is disabled.

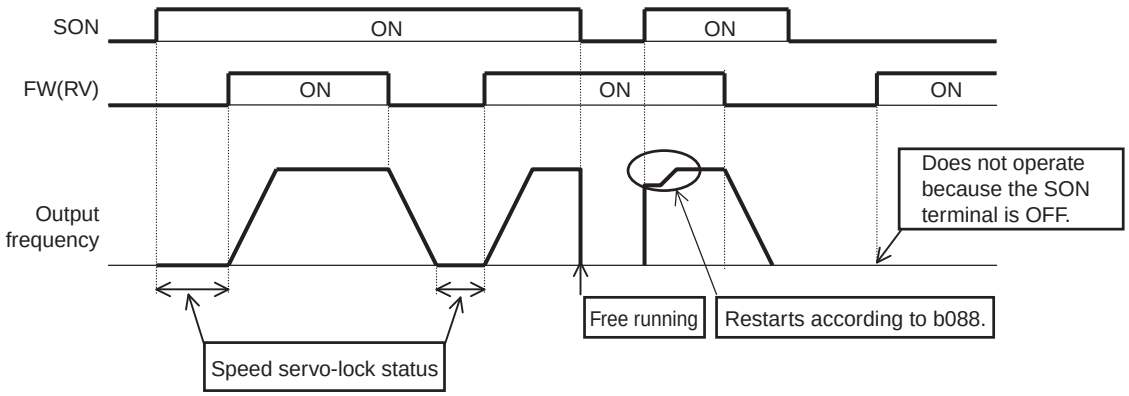

Related functions	A044, C001 to C008

Pulse Train Frequency Input

This function allows you to use a pulse train input to the SAP-SAN terminals as frequency reference or PID feedback value in each control mode.
(This function can be used in all control modes.)

Set the input frequency at the maximum frequency in pulse train frequency scale P055.
The analog input start/end function cannot be used. To limit the input frequency, use pulse train frequency bias amount P057 and pulse train frequency limit P058.

Parameter No.	Function name	Data	Default setting	Unit
P055	Pulse train frequency scale	1.0 to 50.0: Set the input frequency at the maximum frequency.	25.0	kHz
P056	Pulse train frequency filter time constant	0.01 to 2.00: Set a filter time constant for pulse train input.	0.10	s
P057	Pulse train frequency bias amount	-100. to +100.	0.	%
P058	Pulse train frequency limit	0. to 100.	100.	%
A001	Frequency reference selection	06: Pulse train frequency	02	—
A076	PID feedback selection	03: Pulse train frequency	00	
A141	Operation frequency input A setting	07: Pulse train frequency	02	
A142	Operation frequency input B setting	07: Pulse train frequency	03	

Pulse train frequency processing block

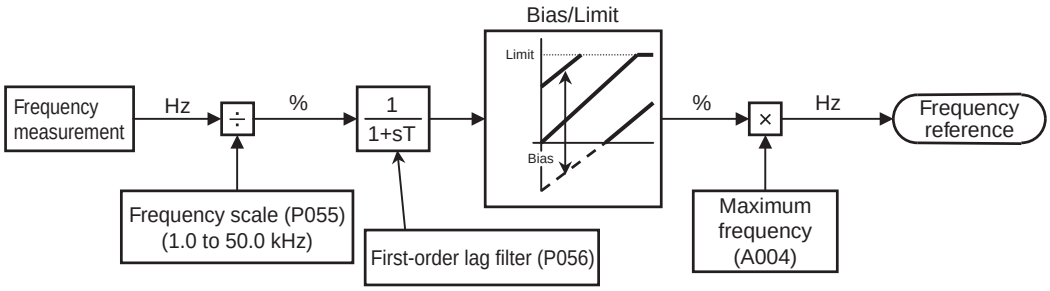

Note: The SWENC switch on PG Board is available for "OFF: encoder disconnection detection disabled".

4-4 Communication Function

• This function allows the Inverter to communicate with an external controller via the RS485 interface from the TM2 terminal on the Inverter's control terminal block board.

■Communication Specifications

Item	ASCII method	ModBus-RTU method	Note
Transmission speed	2400/4800/9600/19200 bps		Select using the Digital Operator.
Communication method	Half-duplex communication		
Synchronous system	Start-stop synchronous system	Asynchronous system	
Transmission code	ASCII code	Binary	
Transmission mode	LSB first		
Compatible interface	RS-485		
Data bit length	7 or 8 bits	8 bits	Select using the Digital Operator.
Parity	No parity/Even/Odd		Select using the Digital Operator.
Stop bit length	1 or 2 bits		Select using the Digital Operator.
Starting method	One-side start using host command		
Wait time	10 to 1000 [ms]	0 to 1000 [ms]	Set using the Digital Operator.
Connection	1:N (N = 32 max.)		Use the Digital Operator to select a station No.
Error check	Overrun/Framing BCC/Vertical/Horizontal parity	Overrun/Framing CRC-16/Horizontal parity	

<RS485 Port Specifications and Connections>
For the RS485 communication function, use the TM2 terminal on the control terminal block board.

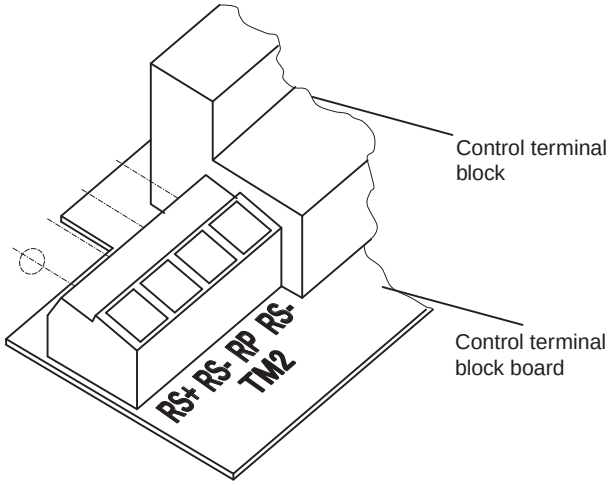

Terminal abbreviations	Description
RS+	Transmission/Reception (+)
RS-	Transmission/Reception (-)
RP	Termination resistor enabling terminal
RS-	Termination resistor enabling terminal

The following wires are recommended for TM2:

Single wire	0.14 to 1.5 mm^2 (If two equal-sized wires are connected to one pole: 0.14 to 0.5 mm^2)
Stranded wire	0.14 to 1.0 mm^2 (If two equal-sized wires are connected to one pole: 0.14 to 0.2 mm^2)
Stranded wire with solderless terminal	0.25 to 0.5 mm^2 (Example: PC-1.25 F-7 from J.S.T. MFG. Co., Ltd.)
Wire strip length	5 mm
Tightening torque	0.22 to 0.25 N•m (screw size: M2)

•Connection
Connect the Inverters parallel to each other, as shown below. For the termination Inverter, short-circuit the RP and RS- terminals. (Also, if the RS485 communication function is used with a single Inverter, the RP and RS- terminals must be short-circuited.)
Short-circuiting the RP and RS- terminals activates the termination resistor inside the control terminal block board, suppressing signal reflection.

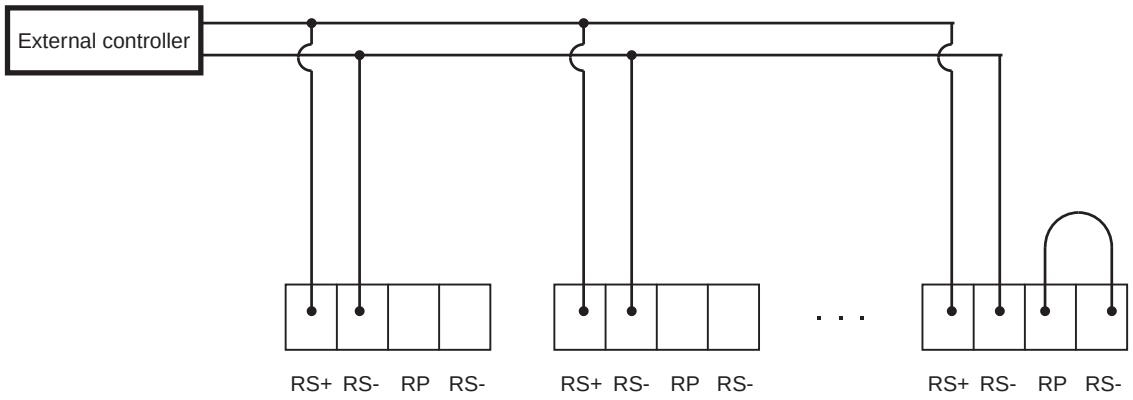

■Setting

RS485 communication requires the following settings.

Parameter No.	Function name	Data	Default setting	Unit
C071	Communication speed selection (Baud rate selection)	02: Loop-back test 03: 2400 bps 04: 4800 bps 05: 9600 bps 06: 19200 bps	04	—
C072	Communication station No. selection	1. to 32.: Allocate each Inverter's station No. Set station numbers to control several Inverters simultaneously.	1.	—
C073	Communication bit length selection	7: 7 bits 8: 8 bits	7	—
C074	Communication parity selection	00: No parity 01: Even 02: Odd	00	—
C075	Communication stop bit selection	1: 1 bit 2: 2 bits	1	—
C076	Communication error selection	00: Trip 01: Trip after deceleration stop 02: Ignore 03: Free-run stop 04: Deceleration stop	02	—
C077	Communication error timeout	0.00 to 99.99: Communication disconnection judgment time	0.00	s
C078	Communication wait time	0. to 1000.: Time to wait for response from the Inverter	0.	ms
C079	Communication method selection	00: ASCII method 01: ModBus-RTU method	01	—
Related functions		A001, A002		

■Communication Test Mode

- The communication test mode allows you to check the RS485 communication line (hardware).

(Communication Test Mode Procedure)

(1) Before conducting a loop-back test, disconnect the cable from TM2 on the control terminal block board.

(2) Set the following parameter via the Digital Operator.
- Set C071 (communication speed selection) to "02" (loop-back test).

(3) Turn off the Inverter, and turn it on again. The check will start.

(4) After the check is complete, the Digital Operator displays the following code:
- Normal: 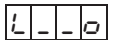
- Abnormal: 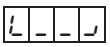

(5) Press the RESET button on the Digital Operator or on the copy unit to show the basic setting screen. Reset the parameter that you changed in step (2) to a desired setting.

ASCII Method

■Communication Procedure

• The following shows the communication procedure between the Inverter and external controller.

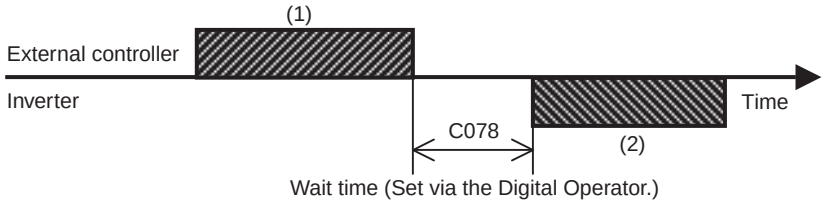

(1): Indicates a frame sent from the external controller to the Inverter.
(2): Indicates a frame sent back from the Inverter to the external controller.

Frame (2) is response output from the Inverter after reception of frame (1). It is not an active output. Below is each frame format (command).

Command List

Command	Description	Communication with all stations	Note
00	Inputs forward/reverse/stop command.	Available	
01	Sets frequency reference.	Available	
02	Sets multi-function input terminal status.	Available	
03	Reads all monitor data.	Not available	
04	Reads the Inverter status.	Not available	
05	Reads trip data.	Not available	
06	Reads a parameter.	Not available	
07	Sets a parameter.	Available	
08	Initializes each set value.	Available	Enabled only when b084 is set to "01" or "02". (Clears trip data.)
09	Checks if a set value can be stored in EEPROM.	Not available	
0A	Stores a set value in EEPROM.	Available	
0B	Re-calculates internal parameters.	Available	

The following describes each command.

<Command 00>
Inputs the forward/reverse/stop command. (To use this command, set A002 to "03" (RS485).)

• Transmission frame
Frame format

STX	Station No.	Command	Data	BCC	CR

	Description	Data size	Setting
STX	Control code (Start of TeXt)	1 byte	STX (0x02)
Station No.	Station No. of the target Inverter	2 bytes	01 to 32, and FF (Communication with all stations)
Command	Transmission command	2 bytes	00
Data	Transmission data	1 byte	*
BCC	Block check code	2 bytes	Exclusive OR from station No. to data. (Refer to page 4-157.)
CR	Control code (Carriage Return)	1 byte	CR (0x0D)

*

Data	Description	Note
0	Stop command	
1	Forward command	
2	Reverse command	

(Example) To send a forward command to station 01
(STX)|01|00|1|(BCC)|(CR) ASCII conversion 02|30 31|30 30|31|33 30|0D

• Response frame
Normal response: Refer to page 4-155.
Error response: Refer to page 4-155.

<Command 01>
Sets frequency reference. (To use this command, set A001 to "03" (RS485).)

• Transmission frame
Frame format

STX	Station No.	Command	Data	BCC	CR

	Description	Data size	Setting
STX	Control code (Start of TeXt)	1 byte	STX (0x02)
Station No.	Station No. of the target Inverter	2 bytes	01 to 32, and FF (Communication with all stations)
Command	Transmission command	2 bytes	01
Data	Transmission data (Decimal ASCII code)	6 bytes	*
BCC	Block check code	2 bytes	Exclusive OR from station No. to data. (Refer to page 4-157.)
CR	Control code (Carriage Return)	1 byte	CR (0x0D)

* To set "5 Hz" for station 01
(STX)|01|01|000500|(BCC)|(CR)
ASCII conversion 02|30 31|30 31|30 30 30 35 30 30|30 35|0D
→

Note 1: Data is a value obtained by mulplying the set value by 100.
(Example) 5 (Hz) → 500 → 000500 ASCII conversion → 30 30 30 35 30 30

Note 2: To use the data as PID control feedback data, set "1" in the MSB of the data.
(Example) 5 (%) → 500 → 100500 ASCII conversion → 31 30 30 35 30 30

•Response frame
Normal response: Refer to page 4-155.
Error response: Refer to page 4-155.

<Command 02>
Sets multi-function input terminal status.

•Transmission frame
Frame format

STX	Station No.	Command	Data	BCC	CR

	Description	Data size	Setting
STX	Control code (Start of TeXt)	1 byte	STX (0x02)
Station No.	Station No. of the target Inverter	2 bytes	01 to 32, and FF (Communication with all stations)
Command	Transmission command	2 bytes	02
Data	Transmission data	16 bytes	*
BCC	Block check code	2 bytes	Exclusive OR from station No. to data. (Refer to page 4-157.)
CR	Control code (Carriage Return)	1 byte	CR (0x0D)

* Data (hexadecimal) and description of multi-function terminals (For details, refer to "Multi-function Input Selection" (page 4-77).)

Data (hex)	Description	Data (hex)	Description
0000000000000001	FW : Forward	0000000100000000	SF1 : Multi-step speed setting bit 1
0000000000000002	RV : Reverse	0000000200000000	SF2 : Multi-step speed setting bit 2
0000000000000004	CF1 : Multi-step speed setting binary 1	0000000400000000	SF3 : Multi-step speed setting bit 3
0000000000000008	CF2 : Multi-step speed setting binary 2	0000000800000000	SF4 : Multi-step speed setting bit 4
0000000000000010	CF3 : Multi-step speed setting binary 3	0000001000000000	SF5 : Multi-step speed setting bit 5
0000000000000020	CF4 : Multi-step speed setting binary 4	0000002000000000	SF6 : Multi-step speed setting bit 6
0000000000000040	JG : Jogging	0000004000000000	SF7 : Multi-step speed setting bit 7
0000000000000080	DB : External DC injection braking	0000008000000000	OLR : Overload limit switching
0000000000000100	SET : 2nd control	0000010000000000	TL : Torque limit enabled/disabled
0000000000000200	2CH : 2-step acceleration/deceleration	0000020000000000	TRQ1 : Torque limit switching 1
0000000000000400	—	0000040000000000	TRQ2 : Torque limit switching 2
0000000000000800	FRS : Free-run stop	0000080000000000	PPI : P/PI switching
0000000000001000	EXT : External trip	0000100000000000	BOK : Brake confirmation
0000000000002000	USP : Power recovery restart prevention	0000200000000000	ORT : Orientation
0000000000004000	CS : Commercial switching	0000400000000000	LAC : LAD cancel
0000000000008000	SFT : Soft lock	0000800000000000	PCLR : Position deviation clear
0000000000010000	AT : Analog input switching	0001000000000000	STAT : Pulse train position command permission
0000000000020000	SET3 : 3rd control	0002000000000000	—
0000000000040000	RS : Reset	0004000000000000	ADD : Set frequency addition
0000000000080000	—	0008000000000000	F-TM : Forced terminal
0000000000100000	STA : 3-wire start	0010000000000000	ATR : Torque reference input permission
0000000000200000	STP : 3-wire stop	0020000000000000	KHC : Integrated power clear
0000000000400000	F/R : 3-wire forward/reverse	0040000000000000	SON : Servo ON
0000000000800000	PID : PID enabled/disabled	0080000000000000	FOC : Preliminary excitation
0000000001000000	PIDC : PID integral reset	0100000000000000	MI1 : Not used
0000000002000000	—	0200000000000000	MI2 : Not used
0000000004000000	CAS : Control gain switching	0400000000000000	MI3 : Not used
0000000008000000	UP : Remote operation accelerated	0800000000000000	MI4 : Not used
0000000010000000	DWN : Remote operation decelerated	1000000000000000	MI5 : Not used
0000000020000000	UDC : Remote operation data clear	2000000000000000	MI6 : Not used
0000000040000000	—	4000000000000000	MI7 : Not used
0000000080000000	OPE : Forced operator	8000000000000000	MI8 : Not used

* Data (hexadecimal) and description of multi-function terminals corresponding to 12 commands (For details, refer to "Multi-function Input Terminal Function".)

Data (hex)	Description	Data (hex)	Description
0000000000000001	—	0000000100000000	—
0000000000000002	AHD: Analog command on hold	0000000200000000	—
0000000000000004	CP1: Position command selection 1	0000000400000000	—
0000000000000008	CP2: Position command selection 2	0000000800000000	—
0000000000000010	CP3: Position command selection 3	0000001000000000	—
0000000000000020	ORL: Zero return limit signal	0000002000000000	—
0000000000000040	ORG: Zero return startup signal	0000004000000000	—
0000000000000080	FOT: Forward driving stop	0000008000000000	—
0000000000000100	ROT: Reverse driving stop	0000010000000000	—
0000000000000200	SPD: Speed/Position switching	0000020000000000	—
0000000000000400	PCNT: Pulse counter	0000040000000000	—
0000000000000800	PCC: Pulse counter clear	0000080000000000	—
0000000000001000	—	0000100000000000	—
0000000000002000	—	0000200000000000	—
0000000000004000	—	0000400000000000	—
0000000000008000	—	0000800000000000	—
0000000000010000	—	0001000000000000	—
0000000000020000	—	0002000000000000	—
0000000000040000	—	0004000000000000	—
0000000000080000	—	0008000000000000	—
0000000000100000	—	0010000000000000	—
0000000000200000	—	0020000000000000	—
0000000000400000	—	0040000000000000	—
0000000000800000	—	0080000000000000	—
0000000001000000	—	0100000000000000	—
0000000002000000	—	0200000000000000	—
0000000004000000	—	0400000000000000	—
0000000008000000	—	0800000000000000	—
0000000010000000	—	1000000000000000	—
0000000020000000	—	2000000000000000	—
0000000040000000	—	4000000000000000	—
0000000080000000	—	8000000000000000	—

(Example) To enable "Forward", "Multi-step speed 1", and "Multi-step speed 2" for the Inverter with station No. 01
0x0000000000000001 + 0x0000000000000004 + 0x0000000000000008
= 0x000000000000000D
The transmission frame is therefore:
(STX)|01|02|000000000000000D|(BCC)|(CR)

•Response frame
Positive response: Refer to page 4-155.
Negative response: Refer to page 4-155.

<Command 03>
Reads all monitor data.

•Transmission frame
Frame format

STX	Station No.	Command	BCC	CR

	Description	Data size	Setting
STX	Control code (Start of TeXt)	1 byte	STX (0x02)
Station No.	Station No. of the target Inverter	2 bytes	01 to 32
Command	Transmission command	2 bytes	03
BCC	Block check code	2 bytes	Exclusive OR from station No. to data. (Refer to page 4-157.)
CR	Control code (Carriage Return)	1 byte	CR (0x0D)

•Response frame
Frame format

STX	Station No.	Data	BCC	CR

	Description	Data size	Setting
STX	Control code (Start of TeXt)	1 byte	STX (0x02)
Station No.	Station No. of the target Inverter	2 bytes	01 to 32
Data	Data	104 bytes	*
BCC	Block check code	2 bytes	Exclusive OR from station No. to data. (Refer to page 4-157.)
CR	Control code (Carriage Return)	1 byte	CR (0x0D)

* Each monitor value

Monitor item	Unit	Magnification	Data size	Description	
Output frequency	Hz	× 100	8 bytes	Decimal ASCII code	
Output current	A	× 10	8 bytes	Decimal ASCII code	
Rotation direction	—	—	8 bytes	0: Stop, 1: Forward, 2: Reverse	
PID feedback monitor	%	× 100	8 bytes	Decimal ASCII code	
Multi-function input monitor	—	—	8 bytes	See *1.	
Multi-function output monitor	—	—	8 bytes	See *2.	→ MSB
Frequency conversion monitor	—	× 100	8 bytes	Decimal ASCII code	LSB ←
Output torque	%	× 1	8 bytes	Decimal ASCII code	
Output voltage monitor	V	× 10	8 bytes	Decimal ASCII code	
Power monitor	kW	× 10	8 bytes	Decimal ASCII code	
—	—	—	8 bytes	"00000000" is stored. (Preliminary data storage area)	
RUN time monitor	h	× 1	8 bytes	Decimal ASCII code	
ON time monitor	h	× 1	8 bytes	Decimal ASCII code	

*1. Multi-function input terminal monitor

Item	Data
S1 terminal	00000001
S2 terminal	00000002
S3 terminal	00000004
S4 terminal	00000008
S5 terminal	00000010
S6 terminal	00000020
S7 terminal	00000040
S8 terminal	00000080
FW terminal	00000100

*2. Multi-function output terminal monitor

Item	Data
P1 terminal	00000001
P2 terminal	00000002
P3 terminal	00000004
P4 terminal	00000008
P5 terminal	00000010
Relay terminal	00000020

<Command 04>
Reads the Inverter status.

• Transmission frame

Frame format

STX	Station No.	Command	BCC	CR

	Description	Data size	Setting
STX	Control code (Start of TeXt)	1 byte	STX (0x02)
Station No.	Station No. of the target Inverter	2 bytes	01 to 32
Command	Transmission command	2 bytes	04
BCC	Block check code	2 bytes	Exclusive OR from station No. to data. (Refer to page 4-157.)
CR	Control code (Carriage Return)	1 byte	CR (0x0D)

• Response frame

Frame format

STX	Station No.	Data	BCC	CR

	Description	Data size	Setting
STX	Control code (Start of TeXt)	1 byte	STX (0x02)
Station No.	Station No. of the target Inverter	2 bytes	01 to 32
Data	Data	8 bytes	*
BCC	Block check code	2 bytes	Exclusive OR from station No. to data. (Refer to page 4-157.)
CR	Control code (Carriage Return)	1 byte	CR (0x0D)

* Inverter status data includes the following three elements (A, B, and C).

Data

Status A	Status B	Status C	00 (Reserved)

Inverter status A

Code	Status
00	Initial status
01	-
02	During stop
03	During RUN
04	During FRS
05	During JG
06	During DB
07	During retry
08	During trip
09	During UV

Inverter status B

Code	Status
00	During stop
01	During RUN
02	During trip

Inverter status C

Code	Status
00	-
01	Stop
02	Deceleration
03	Constant speed
04	Acceleration
05	Forward
06	Reverse
07	Forward to reverse
08	Reverse to forward
09	Forward run start
10	Reverse run start

<Command 05>
Reads trip data.

• Transmission frame

Frame format

STX	Station No.	Command	BCC	CR

	Description	Data size	Setting
STX	Control code (Start of TeXt)	1 byte	STX (0x02)
Station No.	Station No. of the target Inverter	2 bytes	01 to 32
Command	Transmission command	2 bytes	05
BCC	Block check code	2 bytes	Exclusive OR from station No. to data. (Refer to page 4-157.)
CR	Control code (Carriage Return)	1 byte	CR (0x0D)

•Response frame

Frame format

STX	Station No.	Data	BCC	CR

	Description	Data size	Setting
STX	Control code (Start of TeXt)	1 byte	STX (0x02)
Station No.	Station No. of the target Inverter	2 bytes	01 to 32
Data	Each monitor's data at the time of tripping	440 bytes	*
BCC	Block check code	2 bytes	Exclusive OR from station No. to data. (Refer to page 4-157.)
CR	Control code (Carriage Return)	1 byte	CR (0x0D)

* Each trip monitor stores the past six trips, together with total trip count (8 bytes).

Total count	Trip data 1	• • • • • • • • • • • •	Trip data 6

Monitor item	Unit	Magnification	Data size	Note	
Trip factor	—	—	8 bytes	Code display	
Inverter status A	—	—	8 bytes		
Inverter status B	—	—	8 bytes	See "Command 04".	
Inverter status C	—	—	8 bytes		→ MSB
Output frequency	Hz	× 10	8 bytes	Decimal ASCII code	
Total RUN time	h	× 1	8 bytes	Decimal ASCII code	LSB ←
Output current	A	× 10	8 bytes	Decimal ASCII code	
DC voltage	V	× 10	8 bytes	Decimal ASCII code	
Power ON time	h	× 1	8 bytes	Decimal ASCII code	

<Command 06>

Reads a setting item.

•Transmission frame

Frame format

STX	Station No.	Command	Parameter	BCC	CR

	Description	Data size	Setting
STX	Control code (Start of TeXt)	1 byte	STX (0x02)
Station No.	Station No. of the target Inverter	2 bytes	01 to 32
Command	Transmission command	2 bytes	06
Parameter	Parameter No. for data	4 bytes	*
BCC	Block check code	2 bytes	Exclusive OR from station No. to data. (Refer to page 4-157.)
CR	Control code (Carriage Return)	1 byte	CR (0x0D)

* All parameters except F001 and U001 to U012 are retrieved.

• Response frame
Positive response

Frame format

STX	Station No.	ACK	Data	BCC	CR

	Description	Data size	Setting
STX	Control code (Start of TeXt)	1 byte	STX (0x02)
Station No.	Station No. of the target Inverter	2 bytes	01 to 32
ACK	Control code (ACKnowledge)	1 byte	ACK (0x06)
Data	Data (Decimal ASCII code)	8 bytes	*
BCC	Block check code	2 bytes	Exclusive OR from station No. to data. (Refer to page 4-157.)
CR	Control code (Carriage Return)	1 byte	CR (0x0D)

* If the data is a selected item, the corresponding code data is received/transmitted.
Data on H003 and H203 (motor capacity selection) are the following code data.

Code data	00	01	02	03	04	05	06	07	08	09	10
Domestic/USA mode (b085 = 00 or 02)	0.2 kW	—	0.4	—	0.75	—	1.5	2.2	—	3.7	—
EU mode (b085 = 01)	0.2 kW	0.37	—	0.55	0.75	1.1	1.5	2.2	3.0	—	4.0
Code data	11	12	13	14	15	16	17	18	19	20	21
Domestic/USA mode (b085 = 00 or 02)	5.5 kW	7.5	11	15	18.5	22	30	37	45	55	75
EU mode (b085 = 01)	5.5 kW	7.5	11	15	18.5	22	30	37	45	55	75
Code data	22	23	24	25	26						
Domestic/USA mode (b085 = 00 or 02)	90 kW	110	132	150	160						
EU mode (b085 = 01)	90 kW	110	132	150	160						

• If the data is a numeric value, refer to the function code list.
(Example) When acceleration time F002 is set to 30.00 sec, the data is "3000".
Negative response: Refer to page 4-155.

<Command 07>
Writes data to a specified setting item.

•Transmission frame
Frame format

STX	Station No.	Command	Parameter	Data	BCC	CR

	Description	Data size	Setting
STX	Control code (Start of TeXt)	1 byte	STX (0x02)
Station No.	Station No. of the target Inverter	2 bytes	01 to 32, and FF (Communication with all stations)
Command	Transmission command	2 bytes	07
Parameter	Parameter No. for data	4 bytes	*1
Data	Parameter data (Decimal ASCII code)	8 bytes	*2
BCC	Block check code	2 bytes	Exclusive OR from station No. to data. (Refer to page 4-157.)
CR	Control code (Carriage Return)	1 byte	CR (0x0D)

*1 Allowable parameter ranges are shown below.
From F002, A001, b001, C001, H001, and P001 (For F001, use command 01.)
*2 Refer to command 06.

•Response frame
Positive response: Refer to page 4-155.
Negative response: Refer to page 4-155.

<Command 08>
Initializes each set value.
Initialization conforms to the setting of initialization selection b084. If b084 is "00", the trip data is cleared.

•Transmission frame
Frame format

STX	Station No.	Command	BCC	CR

	Description	Data size	Setting
STX	Control code (Start of TeXt)	1 byte	STX (0x02)
Station No.	Station No. of the target Inverter	2 bytes	01 to 32, and FF (Communication with all stations)
Command	Transmission command	2 bytes	08
BCC	Block check code	2 bytes	Exclusive OR from station No. to data. (Refer to page 4-157.)
CR	Control code (Carriage Return)	1 byte	CR (0x0D)

•Response frame
Positive response: Refer to page 4-155.
Negative response: Refer to page 4-155.

<Command 09>
Checks if a set value can be stored in EEPROM.

•Transmission frame
Frame format

STX	Station No.	Command	BCC	CR

	Description	Data size	Setting
STX	Control code (Start of TeXt)	1 byte	STX (0x02)
Station No.	Station No. of the target Inverter	2 bytes	01 to 32
Command	Transmission command	2 bytes	09
BCC	Block check code	2 bytes	Exclusive OR from station No. to data. (Refer to page 4-157.)
CR	Control code (Carriage Return)	1 byte	CR (0x0D)

•Response frame
Frame format

STX	Station No.	ACK	Data	BCC	CR

	Description	Data size	Setting
STX	Control code (Start of TeXt)	1 byte	STX (0x02)
Station No.	Station No. of the target Inverter	2 bytes	01 to 32
ACK	Control code (ACKnowledge)	1 byte	ACK (0x06)
Data	Data	2 bytes	01: Enabled
BCC	Block check code	2 bytes	Exclusive OR from station No. to data. (Refer to page 4-157.)
CR	Control code (Carriage Return)	1 byte	CR (0x0D)

Negative response: Refer to page 4-155.

<Command 0A>
Stores a set value in EEPROM.

•Transmission frame
Frame format

STX	Station No.	Command	BCC	CR

	Description	Data size	Setting
STX	Control code (Start of TeXt)	1 byte	STX (0x02)
Station No.	Station No. of the target Inverter	2 bytes	01 to 32
Command	Transmission command	2 bytes	0A
BCC	Block check code	2 bytes	Exclusive OR from station No. to data. (Refer to page 4-157.)
CR	Control code (Carriage Return)	1 byte	CR (0x0D)

•Response frame
Positive response: Refer to page 4-155.
Negative response: Refer to page 4-155.

<Command 0B>
Re-calculates internal parameters.

Recalculation is required when the base frequency and H*** parameters are changed via RS485 communication.

•Transmission frame
Frame format

STX	Station No.	Command	BCC	CR

	Description	Data size	Setting
STX	Control code (Start of TeXt)	1 byte	STX (0x02)
Station No.	Station No. of the target Inverter	2 bytes	01 to 32
Command	Transmission command	2 bytes	0B
BCC	Block check code	2 bytes	Exclusive OR from station No. to data. (Refer to page 4-157.)
CR	Control code (Carriage Return)	1 byte	CR (0x0D)

•Response frame
Positive response: Refer to page 4-155.
Negative response: Refer to page 4-155.

■Positive/Negative Responses

<Positive Response>
•Response frame
Frame format

STX	Station No.	ACK	BCC	CR

	Description	Data size	Setting
STX	Control code (Start of TeXt)	1 byte	STX (0x02)
Station No.	Station No. of the target Inverter	2 bytes	01 to 32
ACK	Control code (ACKnowledge)	1 byte	ACK (0x06)
BCC	Block check code	2 bytes	Exclusive OR from station No. to data. (Refer to page 4-157.)
CR	Control code (Carriage Return)	1 byte	CR (0x0D)

<Negative Response>

•Response frame

Frame format

STX	Station No.	NAK	Error code	BCC	CR

	Description	Data size	Setting
STX	Control code (Start of TeXt)	1 byte	STX (0x02)
Station No.	Station No. of the target Inverter	2 bytes	01 to 32
NAK	Control code (Negative AcKnowledge)	1 byte	NAK (0x15)
Error code	Communication error status	2 bytes	*
BCC	Block check code	2 bytes	Exclusive OR from station No. to data. (Refer to page 4-157.)
CR	Control code (Carriage Return)	1 byte	CR (0x0D)

* Error Code List

Error code	Description
01H	Parity error
02H	Checksum error
03H	Framing error
04H	Overrun error
05H	Protocol error
06H	ASCII code error
07H	Receiving buffer overrun error
08H	Receiving timeout error
—	—
—	—
11H	Command invalid error
12H	—
13H	Execution disabled error
14H	—
15H	—
16H	Parameter invalid error
17H	—

During communication with all stations, the Inverter sends no response.

■BCC (Block Check Code) Calculation Method

(Example) To set "5 Hz" using command 01 (frequency reference setting) (When the target station No. is "01")

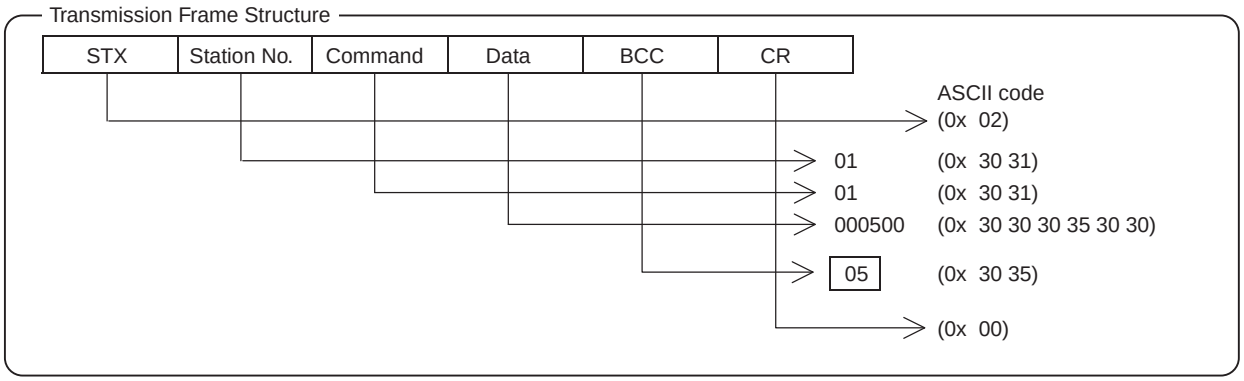

To determine BCC, the Inverter performs ASCII conversion from the station No. to data, and calculates a result of the exclusive OR (Xor) per byte.
For the above transmission frame, BCC is calculated as follows:

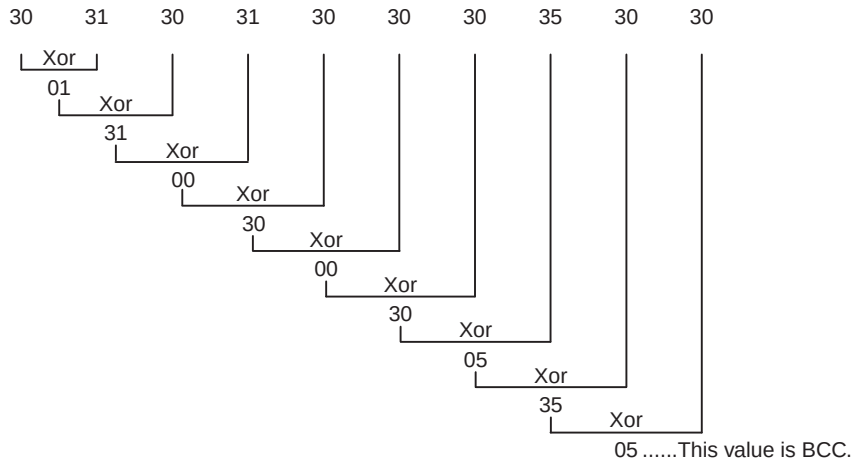

(Appendix) ASCII Code Conversion Table

Text data	ASCII code
STX	2
ACK	6
CR	0D
NAK	15
0	30
1	31
2	32
3	33
4	34
5	35
6	36
7	37
8	38
9	39

Text data	ASCII code
A	41
B	42
C	43
D	44
E	45
F	46
H	48
P	50
b	62

ModBus-RTU Method

Follow the procedures below in regards to communication between the external controller and the Inverter.

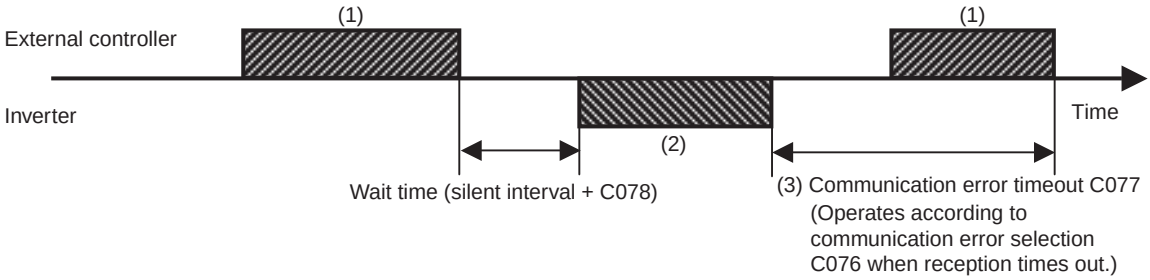

(1) : Frame to be sent from the external control device to the Inverter (Query)
(2) : Frame to be returned from the Inverter to the external controller (Response)
(3) : Unless the Inverter completes reception of a query from the host within the time set in C077 after the Inverter completes a response (response transmission), the Inverter becomes ready to receive the first data again. In this case, the Inverter sends no response.
Also, the Inverter's operation conforms to the setting of communication error selection C076. For details, refer to the following table.
The receiving timeout monitor starts after the first transmission/reception is performed after power-on or reset. Receiving timeout is inactive until reception or transmission is performed.

Parameter No.	Function name	Data	Default setting	Unit
C076	Communication error selection	00: Trip (Trip after receiving timeout [E41]) 01: Trip after stop (Deceleration stop after receiving timeout. Trip after stop [E41]) 02: Ignored (No trip and no alarm output) 03: FRS (Free-run stop after receiving timeout. No trip and no alarm output) 04: Deceleration stop (Deceleration stop after receiving timeout. No trip and no alarm output)	02	—
C077	Communication error timeout	0.00 to 99.99: Time before receiving timeout	0.00	—
C078	Communication wait time	0. to 1000.: Wait time until response starts after reception is completed (excluding silent interval)	0.	—

Response from the Inverter (Frame 2) is output as return after the Inverter receives the query (Frame 1), not output independently.

Below is each frame format (command).

Message Configuration: Query

Header (Silent interval)
Slave address
Function code
Data
Error check
Trailer (Silent interval)

<Slave Address>
- Pre-set numbers ranging from 1 to 32 in each Inverter (slave). (Only the Inverter having the same slave address as the query takes in the corresponding query.)
- Broadcasting can be performed by setting the slave address to "0".
- Data call or loop-back cannot be performed while broadcasting.

<Data>
- Sends the function command.
- The 3G3RX corresponds with the following data formats used in the ModBus.

Data name	Description
Coil	2-value data (1-bit long) that can be referred to or changed
Holding register	16-bit long data that can be referred to or changed

<Function Code>
- Specifies the function for the Inverter to perform.
- Below are the function codes supported by the 3G3RX.

Function Code

Function code	Function	Maximum number of data bytes in 1 message	Maximum data number in 1 message
01h	Reading coil status	4	32 coils (in bits)
03h	Reading holding register content	8	4 registers (in bytes)
05h	Writing into the coil	2	1 coil (in bits)
06h	Writing into the holding register	2	1 register (in bytes)
08h	Loop-back test	—	
0Fh	Writing into multiple coils	4	32 coils (in bits)
10h	Writing into multiple registers	8	4 registers (in bytes)

<Error Check>
- CRC (Cyclic Redundancy Check) is used for the ModBus-RTU error check.
- The CRC code is a 16-bit data generated for the block of random length data in the 8-bit unit.
- To prepare the CRC code, use a generation polynomial of CRC-16 ($X^{16} + X^{15} + X^2 + 1$).

CRC-16 Calculation Example

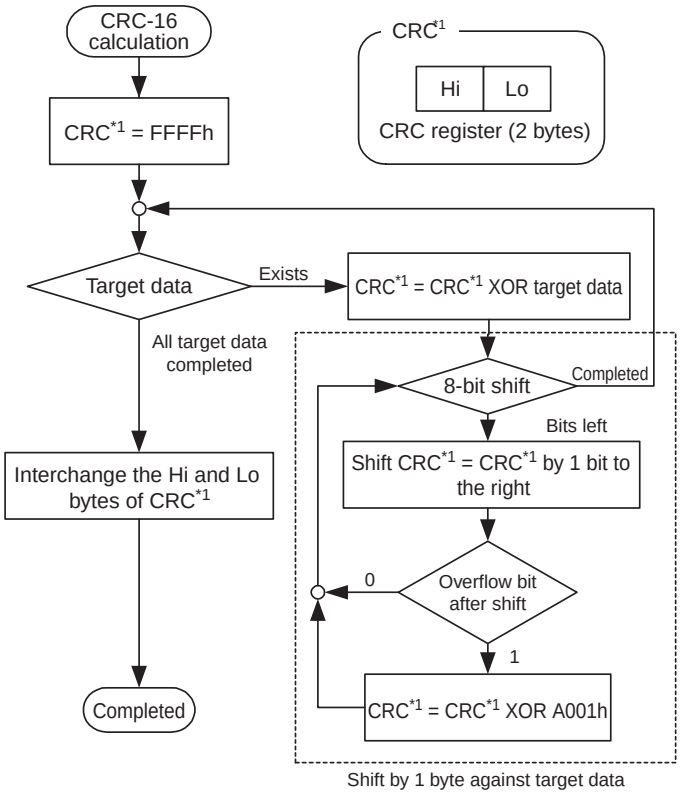

<Header and Trailer (Silent Interval)>
- Wait time from receiving the query from the master to the response by the Inverter.
- Be sure to provide 3.5 characters (24 bits) as the wait time. If the length does not reach 3.5 characters, the Inverter does not respond.
- The actual communication wait time is the total of the silent interval (3.5-character length) and C078 (communication wait time) setting.

Message Configuration: Response

<Total Communication Time>
- The time from receiving query to the response by the Inverter is the total of the silent interval (3.5-character length) and C078 (communication wait time) setting.
- If sending another query to the Inverter after receiving the response, be sure to provide the silent interval length (3.5 characters) at the minimum.

<Normal Response>
- If the query is the loop-back function code (08h), the Inverter sends back a response of the same content as the query.
- If the query is the function code to be written into the holding register or coil (05h, 06h, 0Fh, 10h), the Inverter sends back the query as it is in response.
- If the query is the function code to be read from the holding register or coil (01h, 03h), the Inverter makes the slave address and function code the same as the query and attaches the read data to the query.

<Abnormal Response>
Field Configuration

Slave address
Function code
Exception code
CRC-16

- If an error (aside from a communication error) is found in the query content, the Inverter returns exception responses without performing any operation.
- To determine the cause of an error, check the function code of the response. The function code of the exception response is the value of the query function code to which 80h is added.
- Check the details of the error with the exception code.

Exception code

Code	Description
01h	An unsupported function has been specified.
02h	Specified address does not exist.
03h	Specified data has an unacceptable format.
21h	Data is out of the Inverter's range for writing into the holding register.
22h	The Inverter does not allow this function. • Has attempted to change the register that cannot be changed during operation. • Has issued the enter command during operation (UV). • Has written into the register during trip (UV). • Has written into the read-only register (coil)

<No Response>
The Inverter ignores the query and does not respond if:
- The broadcast is received.
- A communication error is detected in receiving a query.
- The query slave address does not correspond with the slave address set for the Inverter.
- The time interval between 2 pieces of data that configure the message is less than a 3.5-character length.
- Query data length is inappropriate.

Note: If the timer is set in the master to monitor response, but no response is returned within the set time period, send the same query again.

■Explanation of Each Function Code

<Reading Coil Status [01h]>

Reads out the coil status (ON/OFF).

(Example)

Read multi-function input terminals S1 to S6 on the Inverter with slave address 8.

Refer to the following table for the multi-function input terminal status.

Multi-function input terminals	S1	S2	S3	S4	S5	S6
Coil No.	7	8	9	10	11	12
Terminal status	ON	ON	ON	OFF	ON	OFF

Coils 13 and 14 are OFF.

Query

No.	Field name	Example (HEX)
1	Slave address *1	08
2	Function code	01
3	Coil start number (MSB)*2	00
4	Coil start number (LSB)*2	06
5	Number of coils (MSB)*3	00
6	Number of coils (LSB)*3	06
7	CRC-16 (MSB)	5C
8	CRC-16 (LSB)	90

Response

No.	Field name	Example (HEX)
1	Slave address	08
2	Function code	01
3	Number of data bytes	01
4	Coil data *4	17
5	CRC-16 (MSB)	12
6	CRC-16 (LSB)	1A

*4. Transfers data by the number of data bytes.

*1. Broadcasting cannot be performed.

*2. Note that the start number is reduced by 1.

*3. When specifying the value of 0 or over 32 for the number of reading coils, the error code "3h" is replied.

The data received as the response shows the status of coils 7 to 14. The data received here, "17h = 00010111b", should be read with coil 7 as LSB, as follows:

Coil No.	14	13	12	11	10	9	8	7
Coil status	OFF	OFF	OFF	ON	OFF	ON	ON	ON

If the read coil exceeds the defined coil range in the final coil data, such coil data is regarded as "0" and sent.

If the coil status reading command has not been performed normally, refer to the "Exception Response" section.

<Reading Holding Register Content [03h]>

Reads consecutively the specified number of holding register contents from the specified holding register address.

(Example)

Read past trip data from the Inverter with slave address 5.

Below is the data on past three trips:

3G3RX command	d081 (Previous factor)	d081 (Previous Inverter status)
Holding register No.	0012h	0013h
Trip factor (high-order)	Overvoltage (E07)	During deceleration (02)

Query

No.	Field name	Example (HEX)
1	Slave address *1	05
2	Function code	03
3	Register start number (MSB) *2	00
4	Register start number (LSB)*2	11
5	Number of holding registers (MSB)	00
6	Number of holding registers (LSB)	02
7	CRC-16 (MSB)	95
8	CRC-16 (LSB)	8A

*1. Broadcasting cannot be performed.

*2. Note that the start number is reduced by 1.

Response

No.	Field name	Example (HEX)
1	Slave address	05
2	Function code	03
3	Number of data bytes *3	04
4	Register start number (MSB)	00
5	Register start number (LSB)	07
6	Register start number +1 (MSB)	00
7	Register start number +1 (LSB)	02
8	CRC-16 (MSB)	36
9	CRC-16 (LSB)	37

*3. Transfers data by the number of data bytes. In this example, the Inverter sends response data on two holding registers (4 bytes).

Read the data received in response, as follows:

Response buffer	4	5	6	7
Holding register start number	+0 (MSB)	+0 (LSB)	+1 (MSB)	+1 (LSB)
Response data	00h	07h	00h	02h
Trip cause	Overvoltage trip		During deceleration	

If the holding register content has not been read out normally, refer to the "Exception Response" section.

<Writing Into the Coil [05h]>

Writes into one coil.

The following table shows the coil status change.

	Coil status	
	OFF → ON	ON → OFF
Change data (MSB)	FFh	00h
Change data (LSB)	00h	00h

(Example)

Issue the RUN command to the Inverter with slave address 10.

To run the Inverter, set "03" in A002. The coil number of the RUN command is "1".

Query

No.	Field name	Example (HEX)
1	Slave address *1	0A
2	Function code	05
3	Coil start number (MSB)*2	00
4	Coil start number (LSB)*2	00
5	Change data (MSB)	FF
6	Change data (LSB)	00
7	CRC-16 (MSB)	8D
8	CRC-16 (LSB)	41

Response

No.	Field name	Example (HEX)
1	Slave address	0A
2	Function code	05
3	Coil start number (MSB)	00
4	Coil start number (LSB)	00
5	Change data (MSB)	FF
6	Change data (LSB)	00
7	CRC-16 (MSB)	8D
8	CRC-16 (LSB)	41

*1. There is no response for broadcasting.

*2. Note that the start number is reduced by 1.

If writing into the coil cannot be performed normally, refer to the "Exception Response" section.

<Writing Into the Holding Register [06h]>

Writes data into the specified holding register.

(Example)

Write 50 Hz into the Inverter with slave address 5 as the base frequency (A003).

The data resolution of the holding register "1203h" of the base frequency (A003) is 1 Hz. To set 50 Hz, set the change data to "50 (0032h)".

Query

No.	Field name	Example (HEX)
1	Slave address *1	05
2	Function code	06
3	Register start number (MSB) *2	12
4	Register start number (LSB)*2	02
5	Change data (MSB)	00
6	Change data (LSB)	32
7	CRC-16 (MSB)	AD
8	CRC-16 (LSB)	23

Response

No.	Field name	Example (HEX)
1	Slave address	05
2	Function code	06
3	Register start number (MSB)	12
4	Register start number (LSB)	02
5	Change data (MSB)	00
6	Change data (LSB)	32
7	CRC-16 (MSB)	AD
8	CRC-16 (LSB)	23

*1. There is no response for broadcasting.
*2. Note that the start number is reduced by 1.

If writing into the holding register cannot be performed normally, refer to the "Exception Response" section.

<Loop-back Test [08h]>

Used to check the communications between master and slave. A random value can be used for test data.

(Example)

Loop-back test to the Inverter with slave address 1

Query

No.	Field name	Example (HEX)
1	Slave address *	01
2	Function code	08
3	Diagnostic sub code (MSB)	00
4	Diagnostic sub code (LSB)	00
5	Data (MSB)	Random
6	Data (LSB)	Random
7	CRC-16 (MSB)	CRC
8	CRC-16 (LSB)	CRC

Response

No.	Field name	Example (HEX)
1	Slave address	01
2	Function code	08
3	Diagnostic sub code (MSB)	00
4	Diagnostic sub code (LSB)	00
5	Data (MSB)	Random
6	Data (LSB)	Random
7	CRC-16 (MSB)	CRC
8	CRC-16 (LSB)	CRC

* Broadcasting cannot be performed.

The diagnostic sub code corresponds only with the query data echo (00h, 00h), not any other commands.

<Writing Into Multiple Coils [0Fh]>

Rewrites consecutive multiple coils.

(Example)

Change the status of multi-function input terminals S1 to S6 on the Inverter with slave address 5.

Set the multi-function input terminals as shown in the following table.

Multi-function input terminals	S1	S2	S3	S4	S5	S6
Coil No.	7	8	9	10	11	12
Terminal status	ON	ON	ON	OFF	ON	OFF

Query

No.	Field name	Example (HEX)
1	Slave address *1	05
2	Function code	0F
3	Coil start number (MSB)*2	00
4	Coil start number (LSB)*2	06
5	Number of coils (MSB)	00
6	Number of coils (LSB)	06
7	Number of bytes *3	02
8	Change data (MSB)*3	17
9	Change data (LSB)*3	00
10	CRC-16 (MSB)	DB
11	CRC-16 (LSB)	3E

Response

No.	Field name	Example (HEX)
1	Slave address	05
2	Function code	0F
3	Coil start number (MSB)	00
4	Coil start number (LSB)	06
5	Number of coils (MSB)	00
6	Number of coils (LSB)	06
7	CRC-16 (MSB)	34
8	CRC-16 (LSB)	4C

*1. There is no response for broadcasting.

*2. Note that the start number is reduced by 1.

*3. Since the change data comprises of both MSB and LSB as a set, make the byte to be an even number by adding 1, even if the byte that actually needs to be changed is an odd number.

If writing into multiple coils cannot be performed normally, refer to the "Exception Response" section.

<Writing Into Multiple Holding Register [10h]>

Writes into consecutive multiple holding registers.

(Example)

Set acceleration time 1 (F002) to "3000 sec." for the Inverter with slave address 1.

The data resolution of the holding register "1103h, 1104h" of acceleration time 1 (F002) is 0.01 seconds. To set to 3000 seconds, set data to "300000 (493E0h)".

Query

No.	Field name	Example (HEX)
1	Slave address *1	01
2	Function code	10
3	Start address (MSB)*2	11
4	Start address (LSB)*2	02
5	Number of holding registers (MSB)	00
6	Number of holding registers (LSB)	02
7	Number of bytes *3	04
8	Change data 1 (MSB)	00
9	Change data 1 (LSB)	04
10	Change data 2 (MSB)	93
11	Change data 2 (LSB)	E0
12	CRC-16 (MSB)	9E
13	CRC-16 (LSB)	9F

Response

No.	Field name	Example (HEX)
1	Slave address	01
2	Function code	10
3	Start address (MSB)	11
4	Start address (LSB)	02
5	Number of holding registers (MSB)	00
6	Number of holding registers (LSB)	02
7	CRC-16 (MSB)	E5
8	CRC-16 (LSB)	34

*1. There is no response for broadcasting.
*2. Note that the start address is reduced by 1.
*3. Specifies the number of actual bytes to change, not the number of holding registers.

If writing into multiple holding registers cannot be performed normally, refer to the "Exception Response" section.

<Exception Response>

The master requires the response for a query except for broadcast. Though the Inverter should return a response corresponding with the query, it returns an exception response if the query has an error.

The exception response has the field configuration shown in the following table.

Field Configuration
Slave address
Function code
Exception code
CRC-16

The detailed field configuration is shown below. The function code of the exception response is the value of the query function code to which 80h is added. The exception code shows the cause of exception response.

Function code

Query	Exception response
01h	81h
03h	83h
05h	85h
06h	86h
0Fh	8Fh
10h	90h

Exception code

Code	Description
01h	An unsupported function has been specified.
02h	Specified address does not exist.
03h	Specified data has an unacceptable format.
21h	Data is out of the Inverter's range for writing into the holding register.
22h	The Inverter does not allow this function. • Has attempted to change the register that cannot be changed during operation. • Has issued the enter command during operation (UV). • Has written into the register during trip (UV). • Has written into the read-only register (coil).

■Saving the Change to the Holding Register (Enter Command)

Even if using the command to write into the holding register (06h) or into the consecutive holding registers (10h), no change can be saved in the Inverter's memory element. If the Inverter power shuts off without saving any changes, the holding register returns to the status before the changes were made. To save the holding register changes in the Inverter's memory element, the "Enter Command" must be issued according to the following procedure.
When the control parameters are changed, the motor parameters must be re-calculated. In this case, perform recalculation with this register.

To issue the Enter command
Write all memory data into the holding register with the write command (06h), and write re-calculated motor parameters into holding register 0900h. Below are the values to be written into the holding register.

Set value	Description
0000	Motor parameter recalculation
0001	Set value storage
Other than the above	Motor parameter recalculation and set value storage

Note
- The Enter command needs considerable time. Monitor the data writing signal (coil number 001Ah) to check whether the data is being written.
- Since the Inverter's memory element has a limit on the number of rewrites (approx. 100,000 times), the Inverter life may be shortened if enter commands are frequently used.

■Register Number List

R/W in the list shows whether the coil or holding register accepts reading and/or writing.
R: Read only R/W: Read and write enabled

<Coil Number List>

Coil No.	Item	R/W	Description
0000h	Not used	—	
0001h	RUN command	R/W	1: Run 0: Stop (Enabled when A002 = 03)
0002h	Rotation direction command	R/W	1: Reverse 0: Forward (Enabled when A002 = 03)
0003h	External trip (EXT)	R/W	1: Trip
0004h	Trip reset (RS)	R/W	1: Reset
0005h	Not used	—	
0006h	Not used	—	
0007h	Multi-function input terminal S1	R/W	1: ON 0: OFF *1
0008h	Multi-function input terminal S2	R/W	1: ON 0: OFF *1
0009h	Multi-function input terminal S3	R/W	1: ON 0: OFF *1
000Ah	Multi-function input terminal S4	R/W	1: ON 0: OFF *1
000Bh	Multi-function input terminal S5	R/W	1: ON 0: OFF *1
000Ch	Multi-function input terminal S6	R/W	1: ON 0: OFF *1
000Dh	Multi-function input terminal S7	R/W	1: ON 0: OFF *1
000Eh	Multi-function input terminal S8	R/W	1: ON 0: OFF *1
000Fh	Operation status	R	1: Run 0: Stop (Interlocked with d003)
0010h	Rotation direction	R	1: Reverse 0: Forward (Interlocked with d003)
0011h	Inverter ready	R	1: Ready 0: Not ready
0012h	Not used	—	
0013h	RUN (during RUN)	R	1: During trip 0: Normal

*1. When either the control circuit terminal block or the coil is turned on, these settings are ON.
The control circuit terminal block has the priority for the multi-function input terminals.
If the master cannot reset the coil ON status because of communication disconnection, turn the control circuit terminal block from ON to OFF to turn off the coil.
*2. The communications error is retained until a fault reset is input. (Can be reset during operation.)

Coil No.	Item	R/W	Description
0014h	FA1 (constant speed arrival signal)	R	1: ON 0: OFF
0015h	FA2 (over set frequency arrival signal)	R	1: ON 0: OFF
0016h	OL (overload warning)	R	1: ON 0: OFF
0017h	OD (excessive PID deviation)	R	1: ON 0: OFF
0018h	AL (alarm signal)	R	1: ON 0: OFF
0019h	FA3 (set-frequency-only arrival signal)	R	1: ON 0: OFF
001Ah	OTQ (overtorque)	R	1: ON 0: OFF
001Bh	IP (during momentary power interruption)	R	1: ON 0: OFF
001Ch	UV (during undervoltage)	R	1: ON 0: OFF
001Dh	TRQ (during torque limit)	R	1: ON 0: OFF
001Eh	RNT (RUN time exceeded)	R	1: ON 0: OFF
001Fh	ONT (ON time exceeded)	R	1: ON 0: OFF
0020h	THM (thermal warning)	R	1: ON 0: OFF
0021h	Not used	—	
0022h	Not used	—	
0023h	Not used	—	
0024h	Not used	—	
0025h	Not used	—	
0026h	BRK (brake release)	R	1: ON 0: OFF
0027h	BER (brake error)	R	1: ON 0: OFF
0028h	ZS (0 Hz signal)	R	1: ON 0: OFF
0029h	DSE (excessive speed deviation)	R	1: ON 0: OFF

*1. When either the control circuit terminal block or the coil is turned on, these settings are ON.
The control circuit terminal block has the priority for the multi-function input terminals.
If the master cannot reset the coil ON status because of communication disconnection, turn the control circuit terminal block from ON to OFF to turn off the coil.

*2. The communications error is retained until a fault reset is input. (Can be reset during operation.)

Coil No.	Item	R/W	Description
002Ah	POK (position ready)	R	1: ON 0: OFF
002Bh	FA4 (set frequency exceeded 2)	R	1: ON 0: OFF
002Ch	FA5 (set frequency only 2)	R	1: ON 0: OFF
002Dh	OL2 (overload warning signal 2)	R	1: ON 0: OFF
002Eh	FVDc (analog FV disconnection detection)	R	1: ON 0: OFF
002Fh	FIDc (analog FI disconnection detection)	R	1: ON 0: OFF
0030h	FEDc (analog FE disconnection detection)	R	1: ON 0: OFF
0031h	Not used	—	
0032h	FBV (PID FB status output)	R	1: ON 0: OFF
0033h	NDc (network error)	R	1: ON 0: OFF
0034h	LOG1 (logic operation output 1)	R	1: ON 0: OFF
0035h	LOG2 (logic operation output 2)	R	1: ON 0: OFF
0036h	LOG3 (logic operation output 3)	R	1: ON 0: OFF
0037h	LOG4 (logic operation output 4)	R	1: ON 0: OFF
0038h	LOG5 (logic operation output 5)	R	1: ON 0: OFF
0039h	LOG6 (logic operation output 6)	R	1: ON 0: OFF
003Ah	WAC (capacitor life warning)	R	1: ON 0: OFF
003Bh	WAF (cooling fan life warning)	R	1: ON 0: OFF
003Ch	FR (starting contact signal)	R	1: ON 0: OFF
003Dh	OHF (fin overheat warning)	R	1: ON 0: OFF
003Eh	LOC (low current signal)	R	1: ON 0: OFF

*1. When either the control circuit terminal block or the coil is turned on, these settings are ON.
The control circuit terminal block has the priority for the multi-function input terminals.
If the master cannot reset the coil ON status because of communication disconnection, turn the control circuit terminal block from ON to OFF to turn off the coil.

*2. The communications error is retained until a fault reset is input. (Can be reset during operation.)

Coil No.	Item	R/W	Description
003Fh	Not used	—	
0040h	Not used	—	
0041h	Not used	—	
0042h	Not used	—	
0043h	Not used	—	
0044h	Not used	—	
0045h	IRDY (operation ready)	R	1: ON 0: OFF
0046h	FWR (forward run signal)	R	1: ON 0: OFF
0047h	RVR (reverse run signal)	R	1: ON 0: OFF
0048h	MJA (fatal fault signal)	R	1: ON 0: OFF
0049h	During data write	R	1: Writing 0: Normal
004Ah	CRC error	R	1: Error 0: No error *2
004Bh	Overrun error	R	1: Error 0: No error *2
004Ch	Framing error	R	1: Error 0: No error *2
004Dh	Parity error	R	1: Error 0: No error *2
004Eh	Checksum error	R	1: Error 0: No error *2
004Fh	Not used	—	
0050h	WCFV (window comparator FV)	R	1: ON 0: OFF
0050h	WCFI (window comparator FI)	R	1: ON 0: OFF
0052h	WCFE (window comparator FE)	R	1: ON 0: OFF

*1. When either the control circuit terminal block or the coil is turned on, these settings are ON.
The control circuit terminal block has the priority for the multi-function input terminals.
If the master cannot reset the coil ON status because of communication disconnection, turn the control circuit terminal block from ON to OFF to turn off the coil.

*2. The communications error is retained until a fault reset is input. (Can be reset during operation.)

<Holding Register Number List (Frequency Reference and Trip Monitor)>

Register No.	Function name	Function code	R/W	Monitor and setting parameters	Resolution
0001h	Output frequency setting/monitor	F001 (HIGH)	R/W	0 to 40000 (Enabled when A001 = 03)	0.01 [Hz]
0002h		F001 (LOW)	R/W		
0003h	Inverter status A	—	R	0: Initial status 1: — 2: Stop 3: RUN 4: Free-run stop 5: Jogging 6: DC injection braking 7: Retry 8: Trip 9: During UV	—
0004h	Inverter status B	—	R	0: During stop 1: During RUN 2: During trip	—
0005h	Inverter status C	—	R	0: — 1: Stop 2: Deceleration 3: Constant speed 4: Acceleration 5: Forward 6: Reverse 7: Forward to reverse 8: Reverse to forward 9: Forward run start 10: Reverse run start	—
0006h	PID feedback	—	R/W	0 to 10000	0.01 [%]
0007h to 0010h	Not used	—	—		—
0011h	Fault frequency monitor	d080	R	0 to 65530	1 [time]

Note 1: The Inverter's rated current is "1000".
Note 2: If the set value is "10000" (100.0 sec) or more, the value in the second decimal place is ignored.

Register No.	Function name	Function code	R/W	Monitor and setting parameters	Resolution
0012h	Fault monitor 1 factor	d081	R	See "Inverter Trip Factor List" (page 4-176).	—
0013h	Fault monitor 1 Inverter status			See "Inverter Trip Factor List" (page 4-176).	—
0014h	Fault monitor 1 frequency (HIGH)			0 to 40000	0.01 [Hz]
0015h	Fault monitor 1 frequency (LOW)				
0016h	Fault monitor 1 current			Output current value at the time of tripping	0.1 [A]
0017h	Fault monitor 1 voltage			DC input voltage at the time of tripping	1 [V]
0018h	Fault monitor 1 RUN time (HIGH)			Total RUN time before the trip	1 [h]
0019h	Fault monitor 1 RUN time (LOW)				
001Ah	Fault monitor 1 ON time (HIGH)			Total power ON time before the trip	1 [h]
001Bh	Fault monitor 1 ON time (LOW)				
001Ch	Fault monitor 2 factor	d082	R	See "Inverter Trip Factor List" (page 4-176).	—
001Dh	Fault monitor 2 Inverter status			See "Inverter Trip Factor List" (page 4-176).	—
001Eh	Fault monitor 2 frequency (HIGH)			0 to 40000	0.01 [Hz]
001Fh	Fault monitor 2 frequency (LOW)				
0020h	Fault monitor 2 current			Output current value at the time of tripping	0.1 [A]
0021h	Fault monitor 2 voltage			DC input voltage at the time of tripping	1 [V]
0022h	Fault monitor 2 RUN time (HIGH)			Total RUN time before the trip	1 [h]
0023h	Fault monitor 2 RUN time (LOW)				
0024h	Fault monitor 2 ON time (HIGH)			Total power ON time before the trip	1 [h]
0025h	Fault monitor 2 ON time (LOW)				
0026h	Fault monitor 3 factor	d083	R	See "Inverter Trip Factor List" (page 4-176).	—
0027h	Fault monitor 3 Inverter status			See "Inverter Trip Factor List" (page 4-176).	—
0028h	Fault monitor 3 frequency (HIGH)			0 to 40000	0.01 [Hz]
0029h	Fault monitor 3 frequency (LOW)				
002Ah	Fault monitor 3 current			Output current value at the time of tripping	0.1 [A]
002Bh	Fault monitor 3 voltage			DC input voltage at the time of tripping	1 [V]
002Ch	Fault monitor 3 RUN time (HIGH)			Total RUN time before the trip	1 [h]
002Dh	Fault monitor 3 RUN time (LOW)				
002Eh	Fault monitor 3 ON time (HIGH)			Total power ON time before the trip	1 [h]
002Fh	Fault monitor 3 ON time (LOW)				

Note 1: The Inverter's rated current is "1000".
Note 2: If the set value is "10000" (100.0 sec) or more, the value in the second decimal place is ignored.

Register No.	Function name	Function code	R/W	Monitor and setting parameters	Resolution
0030h	Fault monitor 4 factor	d084	R	See "Inverter Trip Factor List" (page 4-176).	—
0031h	Fault monitor 4 Inverter status			See "Inverter Trip Factor List" (page 4-176).	—
0032h	Fault monitor 4 frequency (HIGH)			0 to 40000	0.01 [Hz]
0033h	Fault monitor 4 frequency (LOW)				
0034h	Fault monitor 4 current			Output current value at the time of tripping	0.1 [A]
0035h	Fault monitor 4 voltage			DC input voltage at the time of tripping	1 [V]
0036h	Fault monitor 4 RUN time (HIGH)			Total RUN time before the trip	1 [h]
0037h	Fault monitor 4 RUN time (LOW)				
0038h	Fault monitor 4 ON time (HIGH)			Total power ON time before the trip	1 [h]
0039h	Fault monitor 4 ON time (LOW)				
003Ah	Fault monitor 5 factor	d085	R	See "Inverter Trip Factor List" (page 4-176).	—
003Bh	Fault monitor 5 Inverter status			See "Inverter Trip Factor List" (page 4-176).	—
003Ch	Fault monitor 5 frequency (HIGH)			0 to 40000	0.01 [Hz]
003Dh	Fault monitor 5 frequency (LOW)				
003Eh	Fault monitor 5 current			Output current value at the time of tripping	0.1 [A]
003Fh	Fault monitor 5 voltage			DC input voltage at the time of tripping	1 [V]
0040h	Fault monitor 5 RUN time (HIGH)			Total RUN time before the trip	1 [h]
0041h	Fault monitor 5 RUN time (LOW)				
0042h	Fault monitor 5 ON time (HIGH)			Total power ON time before the trip	1 [h]
0043h	Fault monitor 5 ON time (LOW)				
0044h	Fault monitor 6 factor	d086	R	See "Inverter Trip Factor List" (page 4-176).	—
0045h	Fault monitor 6 Inverter status			See "Inverter Trip Factor List" (page 4-176).	—
0046h	Fault monitor 6 frequency (HIGH)			0 to 40000	0.01 [Hz]
0047h	Fault monitor 6 frequency (LOW)				
0048h	Fault monitor 6 current			Output current value at the time of tripping	0.1 [A]
0049h	Fault monitor 6 voltage			DC input voltage at the time of tripping	1 [V]
004Ah	Fault monitor 6 RUN time (HIGH)			Total RUN time before the trip	1 [h]
004Bh	Fault monitor 6 RUN time (LOW)				
004Ch	Fault monitor 6 ON time (HIGH)			Total power ON time before the trip	1 [h]
004Dh	Fault monitor 6 ON time (LOW)				

Note 1: The Inverter's rated current is "1000".
Note 2: If the set value is "10000" (100.0 sec) or more, the value in the second decimal place is ignored.

Register No.	Function name	Function code	R/W	Monitor and setting parameters	Resolution
004Eh	Warning monitor	d090	R	Warning code	—
004Fh to 08FFh	Not used	—	—		—
0900h	EEPROM write	—	W	0000: Motor parameter recalculation 0001: Set value storage in EEPROM Other: Motor parameter recalculation and set value storage in EEPROM	—
0901h to 1000h	Not used	—	—		—

Note 1: The Inverter's rated current is "1000".
Note 2: If the set value is "10000" (100.0 sec) or more, the value in the second decimal place is ignored.

Inverter Trip Factor List

Trip factor high-order (factor)		Trip factor low-order (Inverter status)	
Name	Code	Name	Code
No trip factor	0	During reset	0
Overcurrent protection during constant speed	1	During stop	1
Overvoltage protection during deceleration	2	During deceleration	2
Overcurrent protection during acceleration	3	During constant speed	3
Overcurrent protection during stop	4	During acceleration	4
Overload protection	5	Operates at frequency = 0	5
Braking resistor overload protection	6	During startup	6
Overvoltage protection	7	During DB	7
EEPROM error	8	During overload limit	8
Undervoltage protection	9	During SON/FOC	9
CT error	10		
CPU error	11		
External trip	12		
USP error	13		
Grounding protection	14		
Incoming overvoltage protection	15		
Momentary power interruption protection	16		
Power module abnormal temperature (during FAN stop)	20		
Power module abnormal temperature	21		
Gate array communications error	23		
Input phase loss protection	24		
Main circuit error	25		

Trip factor high-order (factor)		Trip factor low-order (Inverter status)	
Name	Code	Name	Code
IGBT error	30		
Thermistor error	35		
Brake error addition	36		
Emergency shutoff error	37		
Low-speed-range electronic thermal	38		
Option 1 errors 0 to 9	60 to 69		
Option 2 errors 0 to 9	70 to 79		

<Holding Register Number List (Monitor)>

Register No.	Function name	Function code	R/W	Monitor and setting parameters	Rresolution
1001h	Output frequency monitor	d001 (HIGH)	R	0 to 40000	0.01 [Hz]
1002h		d001 (LOW)			
1003h	Output current monitor	d002	R	0 to 9999	0.1 [A]
1004h	Rotation direction monitor	d003	R	0: Stop 1: Forward 2: Reverse	—
1005h	PID feedback value monitor	d004 (HIGH)	R	0 to 9990	0.1 [%]
1006h		d004 (LOW)			
1007h	Multi-function input monitor	d005	R	2^0: Terminal S1 to 2^7: Terminal S8 2^8: Terminal FW	—
1008h	Multi-function output monitor	d006	R	2^0: Terminal P1 to 2^4: Terminal P5 2^6: Relay terminal	—
1009h	Output frequency monitor (after conversion)	d007 (HIGH)	R	0 to 39960	0.01
100Ah		d007 (LOW)			
100Bh	Real frequency monitor	d008 (HIGH)	R	-40000 to +40000	0.01 [Hz]
100Ch		d008 (LOW)	R		
100Dh	Torque reference monitor	d009	R	-200 to +200	1 [%]
100Eh	Torque bias monitor	d010	R	-200 to +200	1 [%]
100Fh	Not used	—	—		—
1010h	Output torque monitor	d012	R	-200 to +200	1 [%]
1011h	Output voltage monitor	d013	R	0 to 6000	0.1 [V]
1012h	Input power monitor	d014	R	0 to 9999	0.1 [kW]

Register No.	Function name	Function code	R/W	Monitor and setting parameters	Rresolution
1013h	Integrated power monitor	d015 (HIGH)	R	0 to 9999999	0.1 [h]
1014h		d015 (LOW)			
1015h	Total RUN time	d016 (HIGH)	R	0 to 999900	0.1 [kW]
1016h		d016 (LOW)			
1017h	Power ON time monitor	d017 (HIGH)	R	0 to 999900	1 [h]
1018h		d017 (LOW)			
1019h	Fin temperature monitor	d018	R	-200 to 2000	0.1 [°C]
101Ah	Motor temperature monitor	d019	R	-200 to 2000	0.1 [°C]
101Bh	Not used	—	—		—
101Ch					
101Dh	Life assessment monitor	d022	R	2^0: Capacitor on the main circuit board 2^1: Cooling fan rotation speed reduced	—
101Eh to 1025h	Not used	—	—		—
1026h	DC voltage monitor	d102	R	0 to 9999	0.1 [V]
1027h	Regenerative braking load rate monitor	d103	R	0 to 1000	0.1 [%]
1028h	Electronic thermal monitor	d104	R	0 to 1000	0.1 [%]
1029h to 1033h	Not used	—	—		—
1034h	Pulse counter monitor	d028 (HIGH)	R/W	0 to 2147483647	1
1035h		d028 (LOW)	R/W		
1036h	Position command monitor	d029 (HIGH)	R	-2147483647 to 2147483647	1
1037h		d029 (LOW)	R		
1038h	Current position monitor	d030 (HIGH)	R	-2147483647 to 2147483647	1
1039h		d030 (LOW)	R		
103Ah to 1102h	Not used	—	—		—

<Holding Register Number List>

Register No.	Function name	Function code	R/W	Monitor and setting parameters	Resolution
1103h	Acceleration time 1	F002 (HIGH)	R/W	1 to 360000	0.01 [s]
1104h		F002 (LOW)			
1105h	Deceleration time 1	F003 (HIGH)	R/W	1 to 360000	0.01 [s]
1106h		F003 (LOW)			
1107h	Operator rotation direction selection	F004	R/W	0: Forward 1: Reverse	—
1108h to 1200h	Not used	—	—		—

<Holding Register Number List (Function Mode)>

Register No.	Function name	Function code	R/W	Monitor and setting parameters	Resolution
1201h	Frequency reference selection	A001	R/W	0: Digital Operator (FREQ adjuster) 1: Terminal 2: Digital Operator (F001) 3: ModBus communication 4: Option 1 5: Option 2 6: Pulse train frequency 7: Not used 10: Frequency operation result	—
1202h	RUN command selection	A002	R/W	1: Terminal 2: Digital Operator (F001) 3: ModBus communication 4: Option 1 5: Option 2	—
1203h	Base frequency	A003	R/W	30 to Max. frequency	1 [Hz]
1204h	Maximum frequency	A004	R/W	30 to 400	1 [Hz]
1205h	FV/FI selection	A005	R/W	0: Switches between FV/FI 1: Switches between FV/FE 2: Switches between FV/VR 3: Switches between FI/VR 4: Switches between FE/VR	—
1206h	FE selection	A006	R/W	0: FE only 1: FV/FI auxiliary speed (not reversible) 2: FV/FI auxiliary speed (reversible) 3: FE disabled	—
1207h to 120Ah	Not used	—	—		—

Register No.	Function name	Function code	R/W	Monitor and setting parameters	Resolution
120Bh	FV start frequency	A011 (HIGH)	R/W	0 to 40000	0.01 [Hz]
120Ch		A011 (LOW)			
120Dh	FV end frequency	A012 (HIGH)	R/W	0 to 40000	0.01 [Hz]
120Eh		A012 (LOW)			
120Fh	FV start ratio	A013	R/W	O to FVend ratio	1 [%]
1210h	FV end ratio	A014	R/W	FV start ratio to 100	1 [%]
1211h	FV start selection	A015	R/W	0: External start frequency 1: 0 Hz	—
1212h	FV, FE, FI sampling	A016	R/W	1 to 30 31: 500-ms filter with a hysteresis of ±0.1 Hz	1
1213h	Not used	—	—		—
1214h	Not used	—	—		—
1215h	Multi-step speed selection	A019	R/W	0: Binary 1: Bit	—
1216h	Multi-step speed reference 0	A020 (HIGH)	R/W	0/Starting frequency to Max. frequency	0.01 [Hz]
1217h		A020 (LOW)	R/W		
1218h	Multi-step speed reference 1	A021 (HIGH)	R/W	0/Starting frequency to Max. frequency	0.01 [Hz]
1219h		A021 (LOW)	R/W		
121Ah	Multi-step speed reference 2	A022 (HIGH)	R/W	0/Starting frequency to Max. frequency	0.01 [Hz]
121Bh		A022 (LOW)	R/W		
121Ch	Multi-step speed reference 3	A023 (HIGH)	R/W	0/Starting frequency to Max. frequency	0.01 [Hz]
121Dh		A023 (LOW)	R/W		
121Eh	Multi-step speed reference 4	A024 (HIGH)	R/W	0/Starting frequency to Max. frequency	0.01 [Hz]
121Fh		A024 (LOW)	R/W		
1220h	Multi-step speed reference 5	A025 (HIGH)	R/W	0/Starting frequency to Max. frequency	0.01 [Hz]
1221h		A025 (LOW)	R/W		

Register No.	Function name	Function code	R/W	Monitor and setting parameters	Resolution
1222h	Multi-step speed reference 6	A026 (HIGH)	R/W	0/Starting frequency to Max. frequency	0.01 [Hz]
1223h		A026 (LOW)	R/W		
1224h	Multi-step speed reference 7	A027 (HIGH)	R/W	0/Starting frequency to Max. frequency	0.01 [Hz]
1225h		A027 (LOW)	R/W		
1226h	Multi-step speed reference 8	A028 (HIGH)	R/W	0/Starting frequency to Max. frequency	0.01 [Hz]
1227h		A028 (LOW)	R/W		
1228h	Multi-step speed reference 9	A029 (HIGH)	R/W	0/Starting frequency to Max. frequency	0.01 [Hz]
1229h		A029 (LOW)	R/W		
122Ah	Multi-step speed reference 10	A030 (HIGH)	R/W	0/Starting frequency to Max. frequency	0.01 [Hz]
122Bh		A030 (LOW)	R/W		
122Ch	Multi-step speed reference 11	A031 (HIGH)	R/W	0/Starting frequency to Max. frequency	0.01 [Hz]
122Dh		A031 (LOW)	R/W		
122Eh	Multi-step speed reference 12	A032 (HIGH)	R/W	0/Starting frequency to Max. frequency	0.01 [Hz]
122Fh		A032 (LOW)	R/W		
1230h	Multi-step speed reference 13	A033 (HIGH)	R/W	0/Starting frequency to Max. frequency	0.01 [Hz]
1231h		A033 (LOW)	R/W		
1232h	Multi-step speed reference 14	A034 (HIGH)	R/W	0/Starting frequency to Max. frequency	0.01 [Hz]
1233h		A034 (LOW)	R/W		
1234h	Multi-step speed reference 15	A035 (HIGH)	R/W	0/Starting frequency to Max. frequency	0.01 [Hz]
1235h		A035 (LOW)	R/W		
1236h	Not used	—	—		—
1237h	Not used	—	—		—
1238h	Jogging frequency	A038	R/W	Starting frequency to 999	0.01 [Hz]

Register No.	Function name	Function code	R/W	Monitor and setting parameters	Resolution
1239h	Jogging stop selection	A039	R/W	0: Free-run stop/Disabled in operation 1: Deceleration stop/Disabled in operation 2: DC injection braking stop/Disabled in operation 3: Free-run stop/Enabled in operation 4: Deceleration stop/Enabled in operation 5: DC injection braking stop/Enabled in operation	—
123Ah	Not used	—	—		—
123Bh	Torque boost selection	A041	R/W	0: Manual torque boost 1: Automatic torque boost	—
123Ch	Manual torque boost voltage	A042	R/W	0 to 200	0.1 [%]
123Dh	Manual torque boost frequency	A043	R/W	0 to 500	0.1 [%]
123Eh	V/f characteristics selection	A044	R/W	0: VC 1: Special VP 2: Free V/f 3: Sensorless vector 4: 0-Hz sensorless vector 5: Sensor vector	—
123Fh	Output voltage gain	A045	R/W	20 to 100	1 [%]
1240h	Automatic torque boost voltage compensation gain	A046	R/W	0 to 255	1 [%]
1241h	Automatic torque boost slip compensation gain	A047	R/W	0 to 255	1 [%]
1242h to 1244h	Not used	—	—		—
1245h	DC injection braking selection	A051	R/W	0: Disabled 1: Enabled 2: Operates only at the set frequency.	—
1246h	DC injection braking frequency	A052	R/W	0 to 40000	0.01 [Hz]
1247h	DC injection braking delay time	A053	R/W	0 to 50	0.1 [s]
1248h	DC injection braking power	A054	R/W	0 to 100 (0.4 to 55 kW) 0 to 80 (75 to 132 kW)	1 [%]
1249h	DC injection braking time	A055	R/W	0 to 600	0.1 [s]
124Ah	DC injection braking method selection	A056	R/W	0: Edge operation 1: Level operation	—
124Bh	Startup DC injection braking power	A057	R/W	0 to 100 (0.4 to 55 kW) 0 to 80 (75 to 132 kW)	1 [%]

Register No.	Function name	Function code	R/W	Monitor and setting parameters	Resolution
124Ch	Startup DC injection braking time	A058	R/W	0 to 600	0.1 [s]
124Dh	DC injection braking carrier frequency	A059	R/W	5 to 150 (0.4 to 55 kW) 5 to 100 (75 to 132 kW)	0.1 [kHz]
124Eh	Not used	—	—		—
124Fh	Frequency upper limit	A061 (HIGH)	R/W	0/Frequency lower limit to Max. frequency	0.01 [Hz]
1250h		A061 (LOW)	R/W		
1251h	Frequency lower limit	A062 (HIGH)	R/W	0/Starting frequency to Frequency upper limit	0.01 [Hz]
1252h		A062 (LOW)	R/W		
1253h	Jump frequency 1	A063 (HIGH)	R/W	0 to 40000	0.01 [Hz]
1254h		A063 (LOW)	R/W		
1255h	Jump frequency width 1	A064	R/W	0 to 1000	0.01 [Hz]
1256h	Jump frequency 2	A065 (HIGH)	R/W	0 to 40000	0.01 [Hz]
1257h		A065 (LOW)	R/W		
1258h	Jump frequency width 2	A066	R/W	0 to 1000	0.01 [Hz]
1259h	Jump frequency 3	A067 (HIGH)	R/W	0 to 40000	0.01 [Hz]
125Ah		A067 (LOW)	R/W		
125Bh	Jump frequency width 3	A068	R/W	0 to 1000	0.01 [Hz]
125Ch	Acceleration stop frequency	A069 (HIGH)	R/W	0 to 40000	0.01 [Hz]
125Dh		A069 (LOW)	R/W		
125Eh	Acceleration stop time	A070	R/W	0 to 600	0.1 [s]
125Fh	PID selection	A071	R/W	0: Disabled 1: Enabled 2: Reverse output enabled	—
1260h	PID P gain	A072	R/W	2 to 50	0.1
1261h	PID I gain	A073	R/W	0 to 36000	0.1 [s]
1262h	PID D gain	A074	R/W	0 to 10000	0.01 [s]
1263h	PID scale	A075	R/W	1 to 9999	0.01

Register No.	Function name	Function code	R/W	Monitor and setting parameters	Resolution
1264h	PID feedback selection	A076	R/W	0: Input FI 1: Input FV 2: RS485 communication 3: Pulse train frequency 10: Operation function output	—
1265h	Reverse PID function	A077	R/W	0: Disabled 1: Enabled	—
1266h	PID output limit function	A078	R/W	0 to 1000	0.1 [s]
1267h	PID feedforward selection	A079	R/W	0: Disabled 1: Input FV 2: Input FI 3: Input FE	—
1268h	Not used	—	—		—
1269h	AVR selection	A081	R/W	0: Always ON 1: Always OFF 2: OFF during deceleration	—
126Ah	AVR voltage selection	A082	R/W	200-V class: 0 (200) 1 (215) 2 (220) 3 (230) 4 (240) 400-V class: 5 (380) 6 (400) 7 (415) 8 (440) 9 (460) 10 (480)	—
126Bh	Not used	—	—		—
126Ch	Not used	—	—		—
126Dh	RUN mode selection	A085	R/W	0: Normal operation 1: Energy-saving operation 2: Automatic operation	—
126Eh	Energy-saving response/ accuracy adjustment	A086	R/W	0 to 1000	0.1 [%]
126Fh to 1273h	Not used	—	—		—
1274h	Acceleration time 2	A092 (HIGH)	R/W	1 to 360000	0.01 [s]
1275h		A092 (LOW)	R/W		
1276h	Deceleration time 2	A093 (HIGH)	R/W	1 to 360000	0.01 [s]
1277h		A093 (LOW)	R/W		
1278h	2-step acceleration/ deceleration selection	A094	R/W	0: Switched via terminal 2CH 1: Switched by setting	—

Register No.	Function name	Function code	R/W	Monitor and setting parameters	Resolution
1279h	2-step acceleration frequency	A095 (HIGH)	R/W	0 to 40000	0.01 [Hz]
127Ah		A095 (LOW)	R/W		
127Bh	2-step deceleration frequency	A096 (HIGH)	R/W	0 to 40000	0.01 [Hz]
127Ch		A096 (LOW)	R/W		
127Dh	Acceleration pattern selection	A097	R/W	0: Line 1: S-shape curve 2: U-shape curve 3: Inverted U-shape curve 4: EL-S-shape curve	—
127Eh	Deceleration pattern selection	A098	R/W	0: Line 1: S-shape curve 2: U-shape curve 3: Inverted U-shape curve 4: EL-S-shape curve	—
127Fh	Not used	—	—		—
1280h	Not used	—	—		—
1281h	FI start frequency	A101 (HIGH)	R/W	0 to 40000	0.01 [Hz]
1282h		A101 (LOW)	R/W		
1283h	FI end frequency	A102 (HIGH)	R/W	0 to 40000	0.01 [Hz]
1284h		A102 (LOW)	R/W		
1285h	FI start ratio	A103	R/W	O to FI end ratio	1 [%]
1286h	FI end ratio	A104	R/W	FI start ratio to 100	1 [%]
1287h	FI start selection	A105	R/W	0: External start frequency 1: 0 Hz	—
1288h to 128Ch	Not used	—	—		—
128Dh	FE start frequency	A111 (HIGH)	R/W	-40000 to 40000	0.01 [Hz]
128Eh		A111 (LOW)	R/W		
128Fh	FE end frequency	A112 (HIGH)	R/W	-40000 to 40000	0.01 [Hz]
1290h		A112 (LOW)	R/W		
1291h	FE start ratio	A113	R/W	-100 to FE end ratio	1 [%]
1292h	FE end ratio	A114	R/W	FE start ratio to 100	1 [%]

Register No.	Function name	Function code	R/W	Monitor and setting parameters	Resolution
1293h to 12A4h	Not used	—	—		—
12A5h	Acceleration curve parameter	A131	R/W	1: Small curve to 10: Large curve	—
12A6h	Deceleration curve parameter	A132	R/W	1: Small curve to 10: Large curve	—
12A7h to 12AEh	Not used	—	—		—
12AFh	Operation frequency input A setting	A141	R/W	0: Digital Operator (F001) 1: Digital Operator (FREQ adjuster) 2: Input FV 3: Input FI 4: RS485 communication 5: Option 1 6: Option 2 7: Pulse train frequency	—
12B0h	Operation frequency input B setting	A142	R/W	0: Digital Operator (F001) 1: Digital Operator (FREQ adjuster) 2: Input FV 3: Input FI 4: RS485 communication 5: Option 1 6: Option 2 7: Pulse train frequency	—
12B1h	Operator selection	A143	R/W	0: Addition (A + B) 1: Subtraction (A - B) 2: Multiplication (A × B)	—
12B2h	Not used	—	—		—
12B3h	Frequency addition amount	A145 (HIGH)	R/W	0 to 40000	0.01 [Hz]
12B4h		A145 (LOW)	R/W		
12B5h	Frequency addition direction	A146	R/W	0: Frequency reference + A145 1: Frequency reference - A145	—
12B6h to 12B8h	Not used	—	—		—
12B9h	EL-S-curve ratio 1 during acceleration	A150	R/W	0 to 50	1 [%]
12BAh	EL-S-curve ratio 2 during acceleration	A151	R/W	0 to 50	1 [%]
12BBh	EL-S-curve ratio 1 during deceleration	A152	R/W	0 to 50	1 [%]
12BCh	EL-S-curve ratio 2 during deceleration	A153	R/W	0 to 50	1 [%]

Register No.	Function name	Function code	R/W	Monitor and setting parameters	Resolution
12BDh to 1300h	Not used	—	—		—
1301h	Retry selection	b001	R/W	0: Trip 1: 0-Hz start 2: Frequency matching start 3: Trip after frequency matching deceleration stop 4: Frequency pull-in restart	—
1302h	Allowable momentary power interruption time	b002	R/W	3 to 250	0.1 [s]
1303h	Retry wait time	b003	R/W	3 to 1000	0.1 [s]
1304h	Momentary power interruption/undervoltage trip during stop selection	b004	R/W	0: Disabled 1: Enabled 2: Disabled during stop and deceleration stop	—
1305h	Momentary power interruption retry time selection	b005	R/W	0: 16 times 1: No limit	—
1306h	Input phase loss protection selection	b006	R/W	0: Disabled 1: Enabled	—
1307h	Frequency matching lower limit frequency setting	b007 (HIGH)	R/W	0 to 40000	0.01 [Hz]
1308h		b007 (LOW)	R/W		
1309h	Trip retry selection	b008	R/W	0: Trip 1: 0-Hz start 2: Frequency matching start 3: Trip after frequency matching deceleration stop 4: Frequency pull-in restart	—
130Ah	Undervoltage retry time selection	b009	R/W	0: 16 times 1: No limit	—
130Bh	Overvoltage/overcurrent retry time selection	b010	R/W	1 to 3	—
130Ch	Trip retry wait time	b011	R/W	3 to 1000	0.1 [s]
130Dh	Electronic thermal level	b012	R/W	200 to 1000	0.1 [%]
130Eh	Electronic thermal characteristics selection	b013	R/W	0: Reduction characteristics 1: Constant torque characteristics 2: Free setting	—
130Fh	Not used	—	—		—
1310h	Free setting, electronic thermal frequency 1	b015	R/W	0 to 400	1 [Hz]
1311h	Free setting, electronic thermal current 1	b016	R/W	0 to Rated current	0.1 [A]
1312h	Free setting, electronic thermal frequency 2	b017	R/W	0 to 400	1 [Hz]

Register No.	Function name	Function code	R/W	Monitor and setting parameters	Resolution
1313h	Free setting, electronic thermal current 2	b018	R/W	0 to Rated current	0.1 [A]
1314h	Free setting, electronic thermal frequency 3	b019	R/W	0 to 400	1 [Hz]
1315h	Free setting, electronic thermal current 3	b020	R/W	0 to Rated current	0.1 [A]
1316h	Overload limit selection	b021	R/W	0: Disabled 1: Enabled during acceleration/constant speed 2: Enabled during constant speed 3: Enabled during acceleration/constant speed (accelerated during regeneration)	—
1317h	Overload limit level	b022	R/W	200 to 2000 (0.4 to 55 kW) 200 to 1800 (75 to 132 kW)	0.1 [%]
1318h	Overload limit parameter	b023	R/W	10 to 3000	0.01 [s]
1319h	Overload limit selection 2	b024	R/W	0: Disabled 1: Enabled during acceleration/ constant speed 2: Enabled during constant speed 3: Enabled during acceleration/constant speed (accelerated during regenera-tion)	—
131Ah	Overload limit level 2	b025	R/W	200 to 2000 (0.4 to 55 kW) 200 to 1800 (75 to 132 kW)	0.1 [%]
131Bh	Overload limit parameter 2	b026	R/W	10 to 3000	0.01 [s]
131Ch	Overcurrent suppression function	b027	R/W	0: Disabled 1: Enabled	—
131Dh	Frequency pull-in restart level	b028	R/W	200 to 2000 (0.4 to 55 kW) 200 to 1800 (75 to 132 kW)	0.1 [%]
131Eh	Frequency pull-in restart parameter	b029	R/W	10 to 3000	0.01 [s]
131Fh	Starting frequency at frequency pull-in restart	b030	R/W	0: Frequency at interruption 1: Max. frequency 2: Set frequency	—
1320h	Soft lock selection	b031	R/W	0: Data other than b031 cannot be changed when terminal SFT is ON. 1: Data other than b031 and the specified frequency parameter cannot be changed when terminal SFT is ON. 2: Data other than b031 cannot be changed. 3: Data other than b031 and the specified frequency parameter cannot be changed. 10: Data can be changed during RUN.	—
1321h	Not used	—	—		—
1322h	Not used	—	—		—

Register No.	Function name	Function code	R/W	Monitor and setting parameters	Resolution
1323h	RUN time/Power ON time setting	b034 (HIGH)	R/W	0 to 65535	1 [10 h]
1324h		b034 (LOW)	R/W		
1325h	Rotation direction limit selection	b035	R/W	0: Forward/Reverse enabled 1: Forward only 2: Reverse only	—
1326h	Reduced voltage startup selection	b036	R/W	0: (Reduced voltage startup time: Short) to 255: (Reduced voltage startup time: Long)	—
1327h	Display selection	b037	R/W	0: Complete display 1: Individual display of functions 2: User setting + b037 3: Data comparison display 4: Basic display	—
1328h	Initial screen selection	b038	R/W	0: Screen on which the Enter key was last pressed 1: d001 2: d002 3: d003 4: d007 5: F001	—
1329h	User parameter automatic setting function selection	b039	R/W	0: Disabled 1: Enabled	—
132Ah	Torque limit selection	b040	R/W	0: Four-quadrant separate setting 1: Terminal switching 2: Analog Input 3: Option 1 4: Option 2	—
132Bh	Torque limit 1 (Four-quadrant mode forward power running)	b041	R/W	0 to 200 (0.4 to 55 kW)/ 0 to 180 (75 to 132 kW)/255 (no)	1 [%]
132Ch	Torque limit 2 (Four-quadrant mode reversed regeneration)	b042	R/W	0 to 200 (0.4 to 55 kW)/ 0 to 180 (75 to 132 kW)/255 (no)	1 [%]
132Dh	Torque limit 3 (Four-quadrant mode reversed power running)	b043	R/W	0 to 200 (0.4 to 55 kW)/ 0 to 180 (75 to 132 kW)/255 (no)	1 [%]
132Eh	Torque limit 4 (Four-quadrant mode forward regeneration)	b044	R/W	0 to 200 (0.4 to 55 kW)/ 0 to 180 (75 to 132 kW)/255 (no)	1 [%]
132Fh	Torque LADSTOP selection	b045	R/W	0: Disabled 1: Enabled	—
1330h	Reverse rotation prevention selection	b046	R/W	0: Disabled 1: Enabled	—
1331h to 1333h	Not used	—	—		—

Register No.	Function name	Function code	R/W	Monitor and setting parameters	Resolution
1334h	Selection of non-stop function at momentary power interruption	b050	R/W	0: Disabled 1: Deceleration stop 2: Momentary power interruption non-stop (without recovery) 3: Momentary power interruption non-stop (with recovery)	—
1335h	Starting voltage of non-stop function at momentary power interruption	b051	R/W	0 to 10000	0.1 [V]
1336h	Starting deceleration level of non-stop function at momentary power interruption	b052	R/W	0 to 10000	0.1 [V]
1337h	Deceleration time of non-stop function at momentary power interruption	b053 (HIGH)	R/W	0 to 360000	0.01 [s]
1338h		b053 (LOW)	R/W		
1339h	Deceleration starting width of non-stop function at momentary power interruption	b054	R/W	0 to 1000	0.01 [Hz]
133Ah	Proportional gain setting of non-stop function at momentary power interruption	b055	R/W	0 to 255	0.01
133Bh	Integral time setting of non-stop function at momentary power interruption	b056	R/W	0 to 65535	0.001 [s]
133Ch to 133Eh	Not used	—	—		—
133Fh	Window comparator FV upper limit level	b060	R/W	Set an upper limit level. Setting range: 0 to 100 Lower limit: Lower limit level + Hysteresis width × 2	1 [%]
1340h	Window comparator FV lower limit level	b061	R/W	Set a lower limit level. Setting range: 0 to 100 Upper limit: Upper limit level - Hysteresis width × 2	1 [%]
1341h	Window comparator FV hysteresis width	b062	R/W	Set a hysteresis width for the upper and lower limit levels. Setting range: 0 to 10 Upper limit: (Upper limit level - Lower limit level) × 2	1 [%]
1342h	Window comparator FI upper limit level	b063	R/W	Set an upper limit level. Setting range: 0 to 100 Lower limit: Lower limit level + Hysteresis width × 2	1 [%]

Register No.	Function name	Function code	R/W	Monitor and setting parameters	Resolution
1343h	Window comparator FI lower limit level	b064	R/W	Set a lower limit level. Setting range: 0 to 100 Upper limit: Upper limit level - Hysteresis width × 2	1 [%]
1344h	Window comparator FI hysteresis width	b065	R/W	Set a hysteresis width for the upper and lower limit levels. Setting range: 0 to 10 Upper limit: (Upper limit level - Lower limit level) × 2	1 [%]
1345h	Window comparator FE upper limit level	b066	R/W	Set an upper limit level. Setting range: -100 to 100 Lower limit: Lower limit level + Hysteresis width × 2	1 [%]
1346h	Window comparator FE lower limit level	b067	R/W	Set a lower limit level. Setting range: -100 to 100 Upper limit: Upper limit level - Hysteresis width × 2	1 [%]
1347h	Window comparator FE hysteresis width	b068	R/W	Set a hysteresis width for the upper and lower limit levels. Setting range: 0 to 10 Upper limit: (Upper limit level - Lower limit level) × 2	1 [%]
1348h	Not used	—	—		—
1349h	Analog operation level at FV disconnection	b070	R/W	0 to 100/255 (no)	1 [%]
134Ah	Analog operation level at FI disconnection	b071	R/W	0 to 100/255 (no)	1 [%]
134Bh	Analog operation level at FE disconnection	b072	R/W	-100 to 100/127 (no)	1 [%]
134Ch to 1350	Not used	—	—		—
1351h	Integrated power clear	b078	R/W	Clear by writing 1	—
1352h	Integrated power display gain	b079	R/W	1 to 1000	1
1353h	Not used	—	—		—
1354h	Not used	—	—		—
1355h	Starting frequency	b082	R/W	10 to 999	0.01 [Hz]
1356h	Carrier frequency	b083	R/W	5 to 150 (0.4 to 55 kW) 5 to 100 (75 to 132 kW)	0.1 [kHz]
1357h	Initialization selection	b084	R/W	0: Clears the trip monitor 1: Initializes data 2: Clears the trip monitor and initializes data	—
1358h	Initialization parameter selection	b085	R/W	Do not change.	—

Register No.	Function name	Function code	R/W	Monitor and setting parameters	Resolution
1359h	Frequency conversion coefficient	b086	R/W	1 to 999	0.1
135Ah	STOP key selection	b087	R/W	0: Enabled 1: Disabled 2: Disabled only during stop	—
135Bh	Free-run stop selection	b088	R/W	0: 0-Hz start 1: Frequency matching start 2: Frequency pull-in restart	—
135Ch	Automatic carrier frequency reduction	b089	R/W	0: Disabled 1: Enabled	—
135Dh	Usage rate of regenerative braking function	b090	R/W	0 to 1000	0.1 [%]
135Eh	Stop selection	b091	R/W	0: Deceleration → Stop 1: Free-run stop	—
135Fh	Cooling fan control	b092	R/W	0: Always ON 1: ON during RUN	—
1360h	Not used	—	—		—
1361h	Not used	—	—		—
1362h	Regenerative braking function operation selection	b095	R/W	0: Disabled 1: Enabled (disabled during stop) 2: Enabled (also during stop)	—
1363h	Regenerative braking function ON level	b096	R/W	330 to 380 660 to 760	1 [V]
1364h	Not used	—	—		—
1365h	Thermistor selection	b098	R/W	0: Disabled 1: PTC enabled 2: NTC enabled	—
1366h	Thermistor error level	b099	R/W	0 to 9999	1 [Ω]
1367h	Free V/f frequency 1	b100	R/W	0 to Free V/f frequency 2	1 [Hz]
1368h	Free V/f voltage 1	b101	R/W	0 to 8000	0.1 [V]
1369h	Free V/f frequency 2	b102	R/W	0 to Free V/f frequency 2	1 [Hz]
136Ah	Free V/f voltage 2	b103	R/W	0 to 8000	0.1 [V]
136Bh	Free V/f frequency 3	b104	R/W	0 to Free V/f frequency 2	1 [Hz]
136Ch	Free V/f voltage 3	b105	R/W	0 to 8000	0.1 [V]
136Dh	Free V/f frequency 4	b106	R/W	0 to Free V/f frequency 2	1 [Hz]
136Eh	Free V/f voltage 4	b107	R/W	0 to 8000	0.1 [V]
136Fh	Free V/f frequency 5	b108	R/W	0 to Free V/f frequency 2	1 [Hz]
1370h	Free V/f voltage 5	b109	R/W	0 to 8000	0.1 [V]
1371h	Free V/f frequency 6	b110	R/W	0 to Free V/f frequency 2	1 [Hz]
1372h	Free V/f voltage 6	b111	R/W	0 to 8000	0.1 [V]
1373h	Free V/f frequency 7	b112	R/W	0 to Free V/f frequency 2	1 [Hz]
1374h	Free V/f voltage 7	b113	R/W	0 to 8000	0.1 [V]

Register No.	Function name	Function code	R/W	Monitor and setting parameters	Resolution
1375h to 137Ah	Not used	—	—		—
137Bh	Brake control selection	b120	R/W	0: Disabled 1: Enabled	—
137Ch	Brake wait time for release	b121	R/W	0 to 500	0.01 [s]
137Dh	Brake wait time for acceleration	b122	R/W	0 to 500	0.01 [s]
137Eh	Brake wait time for stopping	b123	R/W	0 to 500	0.01 [s]
137Fh	Brake wait time for confirmation	b124	R/W	0 to 500	0.01 [s]
1380h	Brake release frequency	b125	R/W	0 to 40000	0.01 [Hz]
1381h	Brake release current	b126	R/W	0 to 2000 (0.4 to 55 kW) 0 to 1800 (75 to 132 kW)	0.1 [%]
1382h	Brake input frequency	b127	R/W	0 to 40000	0.01 [Hz]
1383h	Not used	—	—		—
1384h	Not used	—	—		—
1385h	Overvoltage protection function selection during deceleration	b130	R/W	0: Disabled 1: DC voltage kept constant 2: Acceleration enabled	—
1386h	Overvoltage protection level during deceleration	b131	R/W	200-V class: 330 to 390 (V) 400-V class: 660 to 780 (V)	1 [V]
1387h	Overvoltage protection parameter	b132	R/W	10 to 3000	0.01 [s]
1388h	Overvoltage protection proportional gain setting	b133	R/W	0 to 255	0.01
1389h	Overvoltage protection integral time setting	b134	R/W	0 to 65535.	0.001 [s]
1390h to 1400h	Not used	—	—		—

Register No.	Function name	Function code	R/W	Monitor and setting parameters	Resolution
1401h	Multi-function input 1 selection	C001	R/W	01: RV (reverse) 02: CF1 (multi-step speed setting binary 1) 03: CF2 (multi-step speed setting binary 2) 04: CF3 (multi-step speed setting binary 3) 05: CF4 (multi-step speed setting binary 4) 06: JG (jogging) 07: DB (external DC injection braking) 08: SET (2nd control) 09: 2CH (2-step acceleration/deceleration) 11: FRS (free-run stop) 12: EXT (external trip) 13: USP (USP function) 14: CS (commercial switch) 15: SFT (soft lock) 16: AT (analog input switching) 17: SET3 (3rd control) 18: RS (reset) 20: STA (3-wire start) 21: STP (3-wire stop) 22: F/R (3-wire forward/reverse) 23: PID (PID enabled/disabled) 24: PIDC (PID integral reset) 26: CAS (control gain switching) 27: UP (UP/DWN function accelerated) 28: DWN (UP/DWN function decelerated) 29: UDC (UP/DWN function data clear) 31: OPE (forced operator) 32: SF1 (multi-step speed setting bit 1) 33: SF2 (multi-step speed setting bit 2) 34: SF3 (multi-step speed setting bit 3) 35: SF4 (multi-step speed setting bit 4) 36: SF5 (multi-step speed setting bit 5) 37: SF6 (multi-step speed setting bit 6) 38: SF7 (multi-step speed setting bit 7) 39: OLR (overload limit switching) 40: TL (torque limit enabled) 41: TRQ1 (torque limit switching 1) 42: TRQ2 (torque limit switching 2) 43: PPI (P/PI switching) 44: BOK (Brake confirmation) 45: ORT (orientation) 46: LAC (LAD cancel) 47: PCLR (position deviation clear) 48: STAT (pulse train position command input permission) 50: ADD (frequency addition) 51: F-TM (forced terminal block) 52: ATR (torque command input permission) 53: KHC (integrated power clear) 54: SON (servo ON) 55: FOC (preliminary excitation) 56: Not used 57: Not used 58: Not used 59: Not used 60: Not used 61: Not used 62: Not used 63: Not used 65: AHD (analog command held) 66: CP1 (position command selection 1) 67: CP2 (position command selection 2) 68: CP3 (position command selection 3) 69: ORL (zero return limit signal) 70: ORG (zero return startup signal) 71: FOT (forward driving stop) 72: ROT (reverse driving stop) 73: SPD (speed/position switching) 74: PCNT (pulse counter) 75: PCC (pulse counter clear) 255: no (no allocation)	—
1402h	Multi-function input 2 selection	C002	R/W		—
1403h	Multi-function input 3 selection	C003	R/W		—
1404h	Multi-function input 4 selection	C004	R/W		—
1405h	Multi-function input 5 selection	C005	R/W		—
1406h	Multi-function input 6 selection	C006	R/W		—
1407h	Multi-function input 7 selection	C007	R/W		—
1408h	Multi-function input 8 selection	C008	R/W		—
1409h	Not used	—	—		—
140Ah	Not used	—	—		—

Register No.	Function name	Function code	R/W	Monitor and setting parameters	Resolution
140Bh	Multi-function input 1 operation selection	C011	R/W	0: NO contact at MA; NC contact at MB 1: NC contact at MA; NO contact at MB	—
140Ch	Multi-function input 2 operation selection	C012	R/W		—
140Dh	Multi-function input 3 operation selection	C013	R/W		—
140Eh	Multi-function input 4 operation selection	C014	R/W		—
140Fh	Multi-function input 5 operation selection	C015	R/W		—
1410h	Multi-function input 6 operation selection	C016	R/W		—
1411h	Multi-function input 7 operation selection	C017	R/W		—
1412h	Multi-function input 8 operation selection	C018	R/W		—
1413h	FW terminal operation selection	C019	R/W		—
1414h	Not used	—	—		—

Register No.	Function name	Function code	R/W	Monitor and setting parameters	Resolution
1415h	Multi-function output terminal P1 selection	C021	R/W	0: RUN (signal during RUN) 1: FA1 (constant speed arrival signal) 2: FA2 (over set frequency arrival signal) 3: OL (overload warning) 4: OD (excessive PID deviation) 5: AL (alarm output) 6: FA3 (set-frequency-only arrival signal) 7: OTQ (overtorque) 8: IP (signal during momentary power interruption) 9: UV (signal during undervoltage) 10: TRQ (signal during torque limit) 11: RNT (RUN time exceeded) 12: ONT (ON time exceeded) 13: THM (thermal warning) 19: BRK (brake release) 20: BER (brake error) 21: ZS (0 Hz signal) 22: DSE (excessive speed deviation) 23: POK (position ready) 24: FA4 (set frequency exceeded 2) 25: FA5 (set frequency only 2) 26: OL2 (overload warning 2) 27: FVDc (analog FV disconnection detection) 28: FIDc (analog FI disconnection detection) 29: FEDc (analog FE disconnection detection) 31: FBV (PID FB status output) 32: NDc (network error) 33: LOG1 (logic operation output 1) 34: LOG2 (logic operation output 2) 35: LOG3 (logic operation output 3) 36: LOG4 (logic operation output 4) 37: LOG5 (logic operation output 5) 38: LOG6 (logic operation output 6) 39: WAC (capacitor life warning signal) 40: WAF (fan life warning signal) 41: FR (RUN command signal) 42: OHF (fin overheat warning) 43: LOC (light load detection signal) 44: Not used 45: Not used 46: Not used 47: Not used 48: Not used 49: Not used 50: IRDY (operation ready signal) 51: FWR (forward run signal) 52: RVR (reverse run signal) 53: MJA (fatal fault signal) 54: WCFV (window comparator FV) 55: WCFI (window comparator FI) 56: WCFE (window comparator FE) (When alarm code output is selected in C062, AC0 to AC2, or AC0 to AC3 (ACn: alarm code output) are forced to be allocated to multi-function output terminals P1 to P3, or P1 to P4.)	—
1416h	Multi-function output terminal P2 selection	C022	R/W		—
1417h	Multi-function output terminal P3 selection	C023	R/W		—
1418h	Multi-function output terminal P4 selection	C024	R/W		—
1419h	Multi-function output terminal P5 selection	C025	R/W		—
141Ah	Relay output (MA, MB) function selection	C026	R/W		—

Register No.	Function name	Function code	R/W	Monitor and setting parameters	Resolution
141Bh	MP selection	C027	R/W	0: Output frequency 1: Output current 2: Output torque 3: Digital output frequency 4: Output voltage 5: Input power 6: Thermal load rate 7: LAD frequency 8: Digital current monitor 9: Motor temperature 10: Fin temperature 12: Not used	—
141Ch	AM selection	C028	R/W	0: Output frequency 1: Output current 2: Output torque 4: Output voltage 5: Input power 6: Thermal load rate 7: LAD frequency 9: Motor temperature 10: Fin temperature 11: Output torque (signed) 13: Not used	—
141Dh	AMI selection	C029	R/W	0: Output frequency 1: Output current 2: Output torque 4: Output voltage 5: Input power 6: Thermal load rate 7: LAD frequency 9: Motor temperature 10: Fin temperature 14: Not used	—
141Eh	Digital current monitor reference value	C030	R/W	200 to 2000	0.1 [%]
141Fh	Multi-function output terminal P1 contact selection	C031	R/W	0: NO 1: NC	—
1420h	Multi-function output terminal P2 contact selection	C032	R/W		—
1421h	Multi-function output terminal P3 contact selection	C033	R/W		—
1422h	Multi-function output terminal P4 contact selection	C034	R/W		—
1423h	Multi-function output terminal P5 contact selection	C035	R/W		—
1424h	Relay output (MA, MB) contact selection	C036	R/W		—

Register No.	Function name	Function code	R/W	Monitor and setting parameters	Resolution
1425h	Not used	—	—		—
1426h	Light load signal output mode	C038	R/W	0: Enabled during acceleration/ deceleration/constant speed 1: Enabled only during constant speed	—
1427h	Light load detection level	C039	R/W	0 to 2000 (0.4 to 55 kW) 0 to 1800 (75 to 132 kW)	0.1 [%]
1428h	Overload warning signal output mode	C040	R/W	0: Enabled during acceleration/ deceleration/constant speed 1: Enabled only during constant speed	—
1429h	Overload warning level	C041	R/W	0.0: Does not operate. 0 to 2000 (0.4 to 55 kW) 0 to 1800 (75 to 132 kW)	0.1 [%]
142Ah	Arrival frequency during acceleration	C042 (HIGH)	R/W	0 to 40000	0.01 [Hz]
142Bh		C042 (LOW)	R/W		
142Ch	Arrival frequency during deceleration	C043 (HIGH)	R/W	0 to 40000	0.01 [Hz]
142Dh		C043 (LOW)	R/W		
142Eh	PID deviation excessive level	C044	R/W	0 to 1000	0.1 [%]
142Fh	Arrival frequency during acceleration 2	C045 (HIGH)	R/W	0 to 40000	0.01 [Hz]
1430h		C045 (LOW)	R/W		
1431h	Arrival frequency during deceleration 2	C046 (HIGH)	R/W	0 to 40000	0.01 [Hz]
1432h		C046 (LOW)	R/W		
1433h to 1437h	Not used	—	—		—
1438h	PID FB upper limit	C052	R/W	0 to 1000	0.1 [%]
1439h	PID FB lower limit	C053	R/W	0 to 1000	0.1 [%]
143Ah	Not used	—	—		—
143Bh	Overtorque level (Forward power running)	C055	R/W	0 to 200 (0.4 to 55 kW) 0 to 180 (75 to 132 kW)	1 [%]
143Ch	Overtorque level (Reverse regeneration)	C056	R/W	0 to 200 (0.4 to 55 kW) 0 to 180 (75 to 132 kW)	1 [%]
143Dh	Overtorque level (Reverse power running)	C057	R/W	0 to 200 (0.4 to 55 kW) 0 to 180 (75 to 132 kW)	1 [%]
143Eh	Overtorque level (Forward regeneration)	C058	R/W	0 to 200 (0.4 to 55 kW) 0 to 180 (75 to 132 kW)	1 [%]
143Fh	Not used	—	—		—

Register No.	Function name	Function code	R/W	Monitor and setting parameters	Resolution
1440h	Not used	—	—		—
1441h	Thermal warning level	C061	R/W	0 to 100	1 [%]
1442h	Alarm code selection	C062	R/W	0: Disabled 1: 3 bits 2: 4 bits	—
1443h	0-Hz detection level	C063	R/W	0 to 10000	0.01 [Hz]
1444h	Fin overheat warning level	C064	R/W	0 to 200	1 [°C]
1445h to 144Ah	Not used	—	—		—
144Bh	Communication speed selection (Baud rate selection)	C071	R/W	2: Loop-back test 3: 2400 bps 4: 4800 bps 5: 9600 bps 6: 19200 bps	—
144Ch	Communication station No. selection	C072	R/W	1 to 32	—
144Dh	Communication bit length selection	C073	R/W	7: 7 bits 8: 8 bits	—
144Eh	Communication parity selection	C074	R/W	0: No parity 1: Even 2: Odd	—
144Fh	Communication stop bit selection	C075	R/W	1: 1 bit 2: 2 bits	—
1450h	Communication error selection	C076	R/W	0: Trip 1: Trip after deceleration stop 2: Ignore 3: Free-run stop 4: Deceleration stop	—
1451h	Communication error timeout	C077	R/W	0 to 9999	0.01 [s]
1452h	Communication wait time	C078	R/W	0 to 1000	1 [ms]
1453h	Communication method selection	C079	R/W	0: ASCII 1: ModBus-RTU	—
1454h	Not used	—	—		—
1455h	FV adjustment	C081	R/W	0 to 65530	1
1456h	FI adjustment	C082	R/W	0 to 65530	1
1457h	FE adjustment	C083	R/W	0 to 65530	1
1458h	Not used	—	—		—
1459h	Thermistor adjustment	C085	R/W	0 to 10000	0.1
145Ah to 145Eh	Not used	—	—		—
145Fh	Not used	—	—		—

Register No.	Function name	Function code	R/W	Monitor and setting parameters	Resolution
1460h to 1468h	Not used	—	—		—
1469h	UP/DWN selection	C101	R/W	0: Does not store the frequency data 1: Stores the frequency data	—
146Ah	Reset selection	C102	R/W	0: Trip reset at power-on 1: Trip reset at power-off 2: Enabled only during trip (Reset at power-on) 3: Trip reset only	—
146Bh	Reset frequency matching selection	C103	R/W	0: 0-Hz start 1: Frequency matching start 2: Frequency pull-in restart	—
146Ch	Not used	—	—		—
146Dh	MP gain setting	C105	R/W	50 to 200	1 [%]
146Eh	AM gain setting	C106	R/W	50 to 200	1 [%]
146Fh	AMI gain setting	C107	R/W	50 to 200	1 [%]
1470h	Not used	—	—		—
1471h	AM bias setting	C109	R/W	0 to 100	1 [%]
1472h	AMI bias setting	C110	R/W	0 to 100	1 [%]
1473h	Overload warning level 2	C111	R/W	0 to 2000 (0.4 to 55 kW) 0 to 1800 (75 to 132 kW)	0.1 [%]
1474h to 147Ch	Not used	—	—		—
147Dh	FV zero adjustment	C121	R/W	0 to 65530	1
147Eh	FI zero adjustment	C122	R/W	0 to 65530	1
147Fh	FE zero adjustment	C123	R/W	0 to 65530	1
1480h to 1485h	Not used	—	—		—

Register No.	Function name	Function code	R/W	Monitor and setting parameters	Resolution
1486h	Output P1 ON delay	C130	R/W	0 to 1000	0.1 [s]
1487h	Output P1 OFF delay	C131	R/W		0.1 [s]
1488h	Output P2 ON delay	C132	R/W		0.1 [s]
1489h	Output P2 OFF delay	C133	R/W		0.1 [s]
148Ah	Output P3 ON delay	C134	R/W		0.1 [s]
148Bh	Output P3 OFF delay	C135	R/W		0.1 [s]
148Ch	Output P4 ON delay	C136	R/W		0.1 [s]
148Dh	Output P4 OFF delay	C137	R/W		0.1 [s]
148Eh	Output P5 ON delay	C138	R/W		0.1 [s]
148Fh	Output P5 OFF delay	C139	R/W		0.1 [s]
1490h	Relay output ON delay	C140	R/W		0.1 [s]
1491h	Relay output OFF delay	C141	R/W		0.1 [s]
1492h	Logic output signal 1 selection 1	C142	R/W	Same as C021 to C026 (except LOG1 to 6)	—
1493h	Logic output signal 1 selection 2	C143	R/W	Same as C021 to C026 (except LOG1 to 6)	—
1494h	Logic output signal 1 operator selection	C144	R/W	0: AND 1: OR 2: XOR	—
1495h	Logic output signal 2 selection 1	C145	R/W	Same as C021 to C026 (except LOG1 to 6)	—
1496h	Logic output signal 2 selection 2	C146	R/W	Same as C021 to C026 (except LOG1 to 6)	—
1497h	Logic output signal 2 operator selection	C147	R/W	0: AND 1: OR 2: XOR	—
1498h	Logic output signal 3 selection 1	C148	R/W	Same as C021 to C026 (except LOG1 to 6)	—
1499h	Logic output signal 3 selection 2	C149	R/W	Same as C021 to C026 (except LOG1 to 6)	—
149Ah	Logic output signal 3 operator selection	C150	R/W	0: AND 1: OR 2: XOR	—
149Bh	Logic output signal 4 selection 1	C151	R/W	Same as C021 to C026 (except LOG1 to 6)	—
149Ch	Logic output signal 4 selection 2	C152	R/W	Same as C021 to C026 (except LOG1 to 6)	—
149Dh	Logic output signal 4 operator selection	C153	R/W	0: AND 1: OR 2: XOR	—
149Eh	Logic output signal 5 selection 1	C154	R/W	Same as C021 to C026 (except LOG1 to 6)	—

Register No.	Function name	Function code	R/W	Monitor and setting parameters	Resolution
149Fh	Logic output signal 5 selection 2	C155	R/W	Same as C021 to C026 (except LOG1 to 6)	—
14A0h	Logic output signal 5 operator selection	C156	R/W	0: AND 1: OR 2: XOR	—
14A1h	Logic output signal 6 selection 1	C157	R/W	Same as C021 to C026 (except LOG1 to 6)	—
14A2h	Logic output signal 6 selection 2	C158	R/W	Same as C021 to C026 (except LOG1 to 6)	—
14A3h	Logic output signal 6 operator selection	C159	R/W	0: AND 1: OR 2: XOR	—
14A4h	Input terminal response time 1	C160	R/W	0 to 200 (× 2 ms)	1
14A5h	Input terminal response time 2	C161	R/W	0 to 200 (× 2 ms)	1
14A6h	Input terminal response time 3	C162	R/W	0 to 200 (× 2 ms)	1
14A7h	Input terminal response time 4	C163	R/W	0 to 200 (× 2 ms)	1
14A8h	Input terminal response time 5	C164	R/W	0 to 200 (× 2 ms)	1
14A9h	Input terminal response time 6	C165	R/W	0 to 200 (× 2 ms)	1
14AAh	Input terminal response time 7	C166	R/W	0 to 200 (× 2 ms)	1
14ABh	Input terminal response time 8	C167	R/W	0 to 200 (× 2 ms)	1
14ACh	FW terminal response time	C168	R/W	0 to 200 (× 2 ms)	1
14ADh	Multi-step speed/position determination time	C169	R/W	0 to 200 (× 2 ms)	1
14AEh to 1500h	Not used	—	—		—
1501h	Auto-tuning selection	H001	R/W	0: Disabled 1: Does not rotate 2: Rotates	—
1502h	Motor parameter selection	H002	R/W	0: Standard 1: Auto-tuning data 2: Auto-tuning data (with online auto-tuning)	—
1503h	Motor capacity selection	H003	R/W	*	—

Register No.	Function name	Function code	R/W	Monitor and setting parameters	Resolution
1504h	Motor pole number selection	H004	R/W	0: 2P 1: 4P 2: 6P 3: 8P 4: 10P	—
1505h	Speed response	H005 (HIGH)	R/W	0 to 80000	0.001
1506h		H005 (LOW)	R/W		
1507h	Stabilization parameter	H006	R/W	0 to 255	1
1508h to 1514h	Not used	—	—		—
1515h	Motor parameter R1	H020 (HIGH)	R/W	1 to 65530	0.001 [Ω]
1516h		H020 (LOW)	R/W		
1517h	Motor parameter R2	H021 (HIGH)	R/W	1 to 65530	0.001 [Ω]
1518h		H021 (LOW)	R/W		
1519h	Motor parameter L	H022 (HIGH)	R/W	1 to 65530	0.01 [mH]
151Ah		H022 (LOW)	R/W		
151Bh	Motor parameter Io	H023 (HIGH)	R/W	1 to 65530	0.01 [A]
151Ch		H023 (LOW)	R/W		
151Dh	Motor parameter J	H024 (HIGH)	R/W	1 to 9999000	0.001 [kgm^2]
151Eh		H024 (LOW)	R/W		
151Fh to 1523h	Not used	—	—		—
1524h	Motor parameter R1 (auto-tuning data)	H030 (HIGH)	R/W	1 to 65530	0.001 [Ω]
1525h		H030 (LOW)	R/W		
1526h	Motor parameter R2 (auto-tuning data)	H031 (HIGH)	R/W	1 to 65530	0.001 [Ω]
1527h		H031 (LOW)	R/W		

Register No.	Function name	Function code	R/W	Monitor and setting parameters	Resolution
1528h	Motor parameter L (auto-tuning data)	H032 (HIGH)	R/W	1 to 65530	0.01 [mH]
1529h		H032 (LOW)	R/W		
152Ah	Motor parameter Io (auto-tuning data)	H033 (HIGH)	R/W	1 to 65530	0.01 [A]
152Bh		H033 (LOW)	R/W		
152Ch	Motor parameter J (auto-tuning data)	H034 (HIGH)	R/W	1 to 9999000	0.001 [kgm^2]
152Dh		H034 (LOW)	R/W		
152Eh to 153Ch	Not used	—	—		—
153Dh	PI proportional gain	H050	R/W	0 to 10000	0.1 [%]
153Eh	PI integral gain	H051	R/W	0 to 10000	0.1 [%]
153Fh	P proportional gain	H052	R/W	0 to 1000	0.01
1540h to 1546h	Not used	—	—		—
1547h	Limit at 0 Hz	H060	R/W	0 to 1000	0.1 [%]
1548h	Boost amount at SLV startup, 0 Hz	H061	R/W	0 to 50	1 [%]
1549h to 1550h	Not used	—	—		—
1551h	For PI proportional gain switching	H070	R/W	0 to 10000	0.1 [%]
1552h	For PI integral gain switching	H071	R/W	0 to 10000	0.1 [%]
1553h	For P proportional gain switching	H072	R/W	0 to 1000	0.01
1554h	Gain switching time	H073	R/W	0 to 9999	1 [ms]
1555h to 1600h	Not used	—	—		—
1601h	Operation selection at option 1 error	P001	R/W	0: Trips 1: Continues operating	—
1602h	Operation selection at option 2 error	P002	R/W	0: Trips 1: Continues operating	—
1603h to 160Ah	Not used	—	—		—
160Bh	Encoder pulses	P011	R/W	128 to 65535	1

Register No.	Function name	Function code	R/W	Monitor and setting parameters	Resolution
160Ch	V2 control mode selection	P012	R/W	0: ASR 1: APR 2: APR2 3: HAPR	—
160Dh	Pulse train mode selection	P013	R/W	0: Mode 0 1: Mode 1 2: Mode 2	—
160Eh	Orientation stop position	P014	R/W	0 to 4095	1
160Fh	Orientation speed setting	P015	R/W	Starting frequency to 1st max. frequency (upper limit: 12000)	0.01 [Hz]
1610h	Orientation direction setting	P016	R/W	0: Forward 1: Reverse	—
1611h	Position ready range setting	P017	R/W	0 to 10000	1
1612h	Position ready delay time setting	P018	R/W	0 to 999	0.01 [s]
1613h	Electronic gear setting position selection	P019	R/W	0: Feedback side 1: Command side	—
1614h	Electronic gear ratio numerator	P020	R/W	1 to 9999	—
1615h	Electronic gear ratio denominator	P021	R/W	1 to 9999	—
1616h	Position control feedforward gain	P022	R/W	0 to 65535	0.01
1617h	Position loop gain	P023	R/W	0 to 10000	0.01
1618h	Position bias amount	P024	R/W	-2048 to 2048	—
1619h	Secondary resistance compensation enable/ disable selection	P025	R/W	0: Disabled 1: Enabled	—
161Ah	Overspeed error detection level	P026	R/W	0 to 1500	0.1 [%]
161Bh	Speed deviation error detection level	P027	R/W	0 to 12000	0.01 [Hz]
161Ch	Motor gear ratio numerator	P028	R/W	1 to 9999	1
161Dh	Motor gear ratio denominator	P029	R/W	1 to 9999	1
161Eh	Not used	—	—		—
161Fh	Acceleration/deceleration time input type	P031	R/W	0: Digital Operator 1: Option 1 2: Option 2	—
1620h	Orientation stop position input type	P032	R/W	0: Digital Operator 1: Option 1 2: Option 2	—

Register No.	Function name	Function code	R/W	Monitor and setting parameters	Resolution
1621h	Torque reference input selection	P033	R/W	0: Terminal FV 1: Terminal FI 2: Terminal FE 3: Digital Operator	—
1622h	Torque reference setting	P034	R/W	0 to 200 (0.4 to 55 kW) 0 to 180 (75 to 132 kW)	1 [%]
1623h	Polarity selection at torque reference via FE	P035	R/W	0: As per sign 1: Depends on the RUN direction	—
1624h	Torque bias mode	P036	R/W	0: Disabled 1: Digital Operator 2: Input via terminal FE	—
1625h	Torque bias value	P037	R/W	-200 to +200 (0.4 to 55 kW) -180 to +180 (75 to 132 kW)	1 [%]
1626h	Torque bias polarity selection	P038	R/W	0: As per sign 1: Depends on the RUN direction	—
1627h	Speed limit value in torque control (forward)	P039 (HIGH)	R/W	0 to 1st max. frequency	0.01 [Hz]
1628h		P039 (LOW)	R/W		
1629h	Speed limit value in torque control (reverse)	P040 (HIGH)	R/W	0 to 1st max. frequency	0.01 [Hz]
162Ah		P040 (LOW)	R/W		
162Bh	Not used	—	—		—
162Ch	Not used	—	—		—
162Dh	Not used	—	—		—
162Eh	Not used	—	—		—
162Fh	Operation setting at communication error	P045	R/W	0: Trip 1: Trip after deceleration stop 2: Ignore 3: Free run 4: Deceleration stop	—
1630h	Output assembly instance No. setting	P046	R/W	20/21/100	—
1631h	Input assembly instance No. setting	P047	R/W	70/71/101	—
1632h	Operation setting at idle mode detection	P048	R/W	0: Trip 1: Trip after deceleration stop 2: Ignore 3: Free run 4: Deceleration stop	—

Register No.	Function name	Function code	R/W	Monitor and setting parameters	Resolution
1633h	Polarity setting for rotation speed	P049	R/W	0: 0P 1: 2P 2: 4P 3: 6P 4: 8P 5: 10P 6: 12P 7: 14P 8: 16P 9: 18P 10: 20P 11: 22P 12: 24P 13: 26P 14: 28P 15: 30P 16: 32P 17: 34P 18: 36P 19: 38P	—
1634h to 1638h	Not used	—	—		—
1639h	Pulse train frequency scale	P055	R/W	10 to 500 * Input frequency at maximum frequency	0.1 [kHz]
163Ah	Pulse train frequency filter time constant	P056	R/W	1 to 200	0.01 [s]
163Bh	Pulse train frequency bias amount	P057	R/W	-100 to +100	1 [%]
163Ch	Pulse train frequency limit	P058	R/W	0 to 100	1 [%]
163Dh	Not used	—	—		—
163Eh	Multi-step position command 0	P060 (HIGH)	R/W		1
163Fh		P060 (LOW)	R/W		
1640h	Multi-step position command 1	P061 (HIGH)	R/W		1
1641h		P061 (LOW)	R/W		
1642h	Multi-step position command 2	P062 (HIGH)	R/W		1
1643h		P062 (LOW)	R/W		
1644h	Multi-step position command 3	P063 (HIGH)	R/W		1
1645h		P063 (LOW)	R/W		

Register No.	Function name	Function code	R/W	Monitor and setting parameters	Resolution
1646h	Multi-step position command 4	P064 (HIGH)	R/W		1
1647h		P064 (LOW)	R/W		
1648h	Multi-step position command 5	P065 (HIGH)	R/W		1
1649h		P065 (LOW)	R/W		
164Ah	Multi-step position command 6	P066 (HIGH)	R/W		1
164Bh		P066 (LOW)	R/W		
164Ch	Multi-step position command 7	P067 (HIGH)	R/W		1
164Dh		P067 (LOW)	R/W		
164Eh	Zero return mode	P068	R/W	0 (Low)/1 (Hi1)/2 (Hi2)	—
164Fh	Zero return direction selection	P069	R/W	0 (FW)/1 (RV)	—
1650h	Low-speed zero return frequency	P070	R/W	0 to 1000	0.01 [Hz]
1651h	High-speed zero return frequency	P071	R/W	0 to 40000	0.01 [Hz]
1652h	Position range specification (forward)	P072 (HIGH)	R/W	0 to 536870912 (at P012 = 2)/ 0 to 2147483647 (at P012 = 3)	1
1653h		P072 (LOW)	R/W		
1654h	Position range specification (reverse)	P073 (HIGH)	R/W	-536870912 to 0 (at P012 = 2)/ -2147483647 to 0 (at P012 = 3)	1
1655h		P073 (LOW)	R/W		
1656h to 1665h	Not used	—	—		—
1666h to 1685h	Not used	—	—		—
1686h to 2102h	Not used	—	—		—

* Data on H003 (motor capacity selection) is the following code data.

Code data	00	01	02	03	04	05	06	07	08	09	10
Motor capacity (kW)	0.2	—	0.4	—	0.75	—	1.5	2.2	—	3.7	—
Code data	11	12	13	14	15	16	17	18	19	20	21
Motor capacity (kW)	5.5	7.5	11	15	18.5	22	30	37	45	55	75
Code data	22	23	24	25	26						
Motor capacity (kW)	90	110	132	150	160						

<Holding Register Number List (2nd Setting)>

Register No.	Function name	Function code	R/W	Monitor and setting parameters	Resolution
2103h	2nd acceleration time 1	F202 (HIGH)	R/W	1 to 360000	0.01 [s]
2104h		F202 (LOW)	R/W		
2105h	2nd deceleration time 1	F203 (HIGH)	R/W	1 to 360000	0.01 [s]
2106h		F203 (LOW)	R/W		
2107h to 2202h	Not used	—	—		—

<Holding Register Number List (Function Mode 2nd Setting)>

Register No.	Function name	Function code	R/W	Monitor and setting parameters	Resolution
2203h	2nd base frequency	A203	R/W	30 to 2nd max. frequency	1 [Hz]
2204h	2nd max. frequency	A204	R/W	30 to 400	1 [Hz]
2205h to 2215h	Not used	—	—		—
2216h	2nd multi-step speed reference 0	A220 (HIGH)	R/W	0, Starting frequency to 2nd max. frequency	0.01 [Hz]
2217h		A220 (LOW)	R/W		
2218h to 223Ah	Not used	—	—		—
223Bh	2nd torque boost selection	A241	R/W	0: Manual torque boost 1: Automatic torque boost	—
223Ch	2nd manual torque boost voltage	A242	R/W	0 to 200	0.1 [%]
223Dh	2nd manual torque boost frequency	A243	R/W	0 to 500	0.1 [%]

Register No.	Function name	Function code	R/W	Monitor and setting parameters	Resolution
223Eh	2nd V/f characteristics selection	A244	R/W	0: VC 1: Special VP 2: Free V/f 3: Sensorless vector 4: 0-Hz sensorless vector	—
223Fh	Not used	—	—		—
2240h	2nd automatic torque boost voltage compensation gain	A246	R/W	0 to 255	1
2241h	*2nd automatic torque boost slip compensation gain	A247	R/W	0 to 255	1
2242h to 224Eh	Not used	—	—		—
224Fh	2nd frequency upper limit	A261 (HIGH)	R/W	0, 2nd frequency lower limit to 2nd max. frequency	0.01 [Hz]
2250h		A261 (LOW)	R/W		
2251h	2nd frequency lower limit	A262 (HIGH)	R/W	0, Starting frequency to 2nd frequency upper limit	0.01 [Hz]
2252h		A262 (LOW)	R/W		
2253h to 226Eh	Not used	—	—		—
226Fh	2nd acceleration time 2	A292 (HIGH)	R/W	1 to 360000	0.01 [s]
2270h		A292 (LOW)	R/W		
2271h	2nd deceleration time 2	A293 (HIGH)	R/W	1 to 360000	0.01 [s]
2272h		A293 (LOW)	R/W		
2273h	2nd 2-step acceleration/ deceleration selection	A294	R/W	0: Switched via terminal 2CH 1: Switched by setting 2: Switched at forward/reverse inversion only	—
2274h	2nd 2-step acceleration frequency	A295 (HIGH)	R/W	0 to 40000	0.01 [Hz]
2275h		A295 (LOW)	R/W		
2276h	2nd 2-step deceleration frequency	A296 (HIGH)	R/W	0 to 40000	0.01 [Hz]
2277h		A296 (LOW)	R/W		

Register No.	Function name	Function code	R/W	Monitor and setting parameters	Resolution
2278h to 230Bh	Not used	—	—		—
230Ch	2nd electronic thermal level	b212	R/W	200 to 1000	0.1 [%]
230Dh	2nd electronic thermal characteristics selection	b213	R/W	0: Reduction characteristics 1: Constant torque characteristics 2: Free setting	—
230Eh to 2501h	Not used	—	—		—
2502h	2nd motor parameter selection	H202	R/W	0: Standard 1: Auto-tuning data 2: Auto-tuning data (with online auto-tuning)	0.1 [%]
2503h	2nd motor capacity selection	H203	R/W	*	—
2504h	2nd motor pole number selection	H204	R/W	0: 2P 1: 4P 2: 6P 3: 8P 4: 10P	—
2505h	2nd speed response	H205 (HIGH)	R/W	1 to 80000	0.001
2506h		H205 (LOW)	R/W		
2507h	2nd stabilization parameter	H206	R/W	0 to 255	1
2508h to 2514h	Not used	—	—		—
2515h	2nd motor parameter R1	H220 (HIGH)	R/W	1 to 65530	0.001 [Ω]
2516h		H220 (LOW)	R/W		
2517h	2nd motor parameter R2	H221 (HIGH)	R/W	1 to 65530	0.001 [Ω]
2518h		H221 (LOW)	R/W		
2519h	2nd motor parameter L	H222 (HIGH)	R/W	1 to 65530	0.01 [mH]
251Ah		H222 (LOW)	R/W		
251Bh	2nd motor parameter Io	H223 (HIGH)	R/W	1 to 65530	0.01 [A]
251Ch		H223 (LOW)	R/W		

Register No.	Function name	Function code	R/W	Monitor and setting parameters	Resolution
251Dh	2nd motor parameter J	H224 (HIGH)	R/W	1 to 9999000	0.001 [kgm^2]
251Eh		H224 (LOW)	R/W		
251Fh to 2523h	Not used	—	—		—
2524h	2nd motor parameter R1 (auto-tuning data)	H230 (HIGH)	R/W	1 to 65530	0.001 [Ω]
2525h		H230 (LOW)	R/W		
2526h	2nd motor parameter R2 (auto-tuning data)	H231 (HIGH)	R/W	1 to 65530	0.001 [Ω]
2527h		H231 (LOW)	R/W		
2528h	2nd motor parameter L (auto-tuning data)	H232 (HIGH)	R/W	1 to 65530	0.01 [mH]
2529h		H232 (LOW)	R/W		
252Ah	2nd motor parameter Io (auto-tuning data)	H233 (HIGH)	R/W	1 to 65530	0.01 [A]
252Bh		H233 (LOW)	R/W		
252Ch	2nd motor parameter J (auto-tuning data)	H234 (HIGH)	R/W	1 to 9999000	0.001 [kgm^2]
252Dh		H234 (LOW)	R/W		
252Eh to 253Ch	Not used	—	—		—
253Dh	2nd PI proportional gain	H250	R/W	0 to 10000	0.1 [%]
253Eh	2nd PI integral gain	H251	R/W	0 to 10000	0.1 [%]
253Fh	2nd P proportional gain	H252	R/W	0 to 1000	0.01
2540h to 2546h	Not used	—	—		—
2547h	2nd limit at 0 Hz	H260	R/W	0 to 1000	0.1 [%]
2548h	2nd boost amount at SLV startup, 0 Hz	H261	R/W	0 to 50	1 [%]
2549h to 3102h	Not used	—	—		—

* Data on H203 (2nd motor capacity selection) is the following code data.

Code data	00	01	02	03	04	05	06	07	08	09	10
Motor capacity (kW)	0.2	—	0.4	—	0.75	—	1.5	2.2	—	3.7	—
Code data	11	12	13	14	15	16	17	18	19	20	21
Motor capacity (kW)	5.5	7.5	11	15	18.5	22	30	37	45	55	75
Code data	22	23	24	25	26						
Motor capacity (kW)	90	110	132	150	160						

<Holding Register Number List (3rd Setting)>

Register No.	Function name	Function code	R/W	Monitor and setting parameters	Resolution
3103h	3rd acceleration time 1	F302 (HIGH)	R/W	1 to 360000	0.01 [s]
3104h		F302 (LOW)	R/W		
3105h	3rd deceleration time 1	F303 (HIGH)	R/W	1 to 360000	0.01 [s]
3106h		F303 (LOW)	R/W		
3107h to 3202h	Not used	—	—		—

<Holding Register Number List (Function Mode 3rd Setting)>

Register No.	Function name	Function code	R/W	Monitor and setting parameters	Resolution
3203h	3rd base frequency	A303	R/W	30 to 3rd max. frequency	1 [Hz]
3204h	3rd maximum frequency	A304	R/W	30 to 400	1 [Hz]
3205h to 3215h	Not used	—	—		—
3216h	3rd multi-step speed reference 0	A320 (HIGH)	R/W	0, Starting frequency to 3rd max. frequency	0.01 [Hz]
3217h		A320 (LOW)	R/W		
3218h to 323Bh	Not used	—	—		—
323Ch	3rd manual torque boost voltage	A342	R/W	0 to 200	0.1 [%]
323Dh	3rd manual torque boost frequency	A343	R/W	0 to 500	0.1 [%]
323Eh	3rd V/f characteristics selection	A344	R/W	0: VC 1: VP	—
323Fh to 326Ch	Not used	—	—		—

Register No.	Function name	Function code	R/W	Monitor and setting parameters	Resolution
326Dh	3rd acceleration time 2	A392 (HIGH)	R/W	1 to 360000	0.01 [s]
326Eh		A392 (LOW)	R/W		
326Fh	3rd deceleration time 2	A393 (HIGH)	R/W	1 to 360000	0.01 [s]
3270h		A393 (LOW)	R/W		
3271h to 330B	Not used	—	—		—
330Ch	3rd electronic thermal level	b312	R/W	200 to 1000	0.1 [%]
330Dh	3rd electronic thermal characteristics selection	b313	R/W	0: Reduced torque characteristics 1: Constant torque characteristics 2: Free setting	—
330Eh to 3506h	Not used	—	—		—
3507h	3rd stabilization parameter	H306	R/W	0 to 255	1
From 3508h	Not used	—	—		—

Chapter 5

Maintenance Operations

5-1 Protective Functions and Troubleshooting ... 5-1
5-2 Warning Function 5-10

5-1 Protective Functions and Troubleshooting

Error Code List

Name	Description		Display on Digital Operator	Check point and remedy	Reference page
Overcurrent trip	If the motor is restrained or rapidly accelerated or decelerated, a large current flows through the Inverter, which results in a malfunction. The current exceeding the specified level shuts off the output and an error appears. This protection function detects an overcurrent through the AC CT (current detector). The protection circuit is activated at approximately 220% of the Inverter rated output current and a trip occurs.	Constant speed	E01	Is there any rapid load fluctuation? (Eliminate load fluctuation.) Is there any output short-circuit? (Check the output wires.) Is there any ground fault? (Check the output wires and motor.)	—
		Deceleration	E02	Is there any rapid deceleration? (Increase the deceleration time.)	4-8 4-37
		Acceleration	E03	Is there any rapid acceleration? (Increase the acceleration time.) Has the motor shaft been locked? (Check the motor and wires.) Is the torque boost too high? (Lower the torque boost.)	4-8 4-19 4-20 4-21 4-37
		Others	E04	Is the DC injection braking too high? (Lower the injection breaking.) Is there any error on CT? (Replace or repair the CT.)	4-24
Overload trip *1	Monitors the Inverter output current and shuts off the output, displaying an error if the built-in electronic thermal function detects overload against the motor. Trips depending on the electronic thermal function settings.		E05	Is the load too large? (Reduce the loading factor.) Is the thermal level correct? (Adjust the thermal level to an appropriate level.) Note: The electronic thermal function is set to work easily at 5 Hz or lower. If a large load inertial moment is applied, the overload protect function works when the motor starts accelerating, and prevents it from accelerating. In this case, increase the torque boost or take other measures for adjustment.	4-46 4-47 4-48 4-49

Name	Description	Display on Digital Operator	Check point and remedy	Reference page
Braking resistor overload trip	Shuts off the output and displays an error if the usage rate of regenerative braking circuit exceeds the b090 set value.	E06.□	Is there any rapid deceleration? (Increase the deceleration time.) Is the operation cycle frequent? (Increase the operation cycle.) Is the usage rate setting of the regenerative braking function low? (Set to an appropriate level.) Note: Pay attention to the allowable power of the resistor.	4-8 4-72
Overvoltage trip	Extremely high DC voltage between P/+2 and N/- may result in failure. This function therefore shuts off the output and displays an error if the DC voltage between P/+2 and N/- exceeds the specified level because of regenerative energy from the motor or increase of the incoming voltage during operation. Trips when the DC voltage between P/+2 and N/- reaches approximately 400 V DC for 200-V class, and 800 V DC for 400-V class.	E07.□	Is there any rapid deceleration? (Increase the deceleration time.) Is there any ground fault? (Check the output wires and motor.) Has the motor been rotated from the load side? (Reduce regenerative energy.)	4-8
EEPROM error *2 *3	Shuts off the output and displays an error if an error occurs in the built-in EEPROM because of external noise or abnormal temperature rise. Note: It may become a CPU error depending on the case.	E08.□	Is there any large noise source around? (Countermeasures against noise) Has the cooling efficiency been reduced? (Check that there is no clogging in the cooling fin and clean it.) (Replace the cooling fan.)	4-16 4-101

*1. The reset command is not accepted until approximately 10 seconds after the trip occurs (protection function works).

*2. The reset command is not accepted if the EEPROM error E08.□ occurs. Turn off the power once. If you find E08 when turning on the power again, it is possible that the memory element has been broken or the parameters have not been memorized correctly. Perform the user initialization to set the parameters again.

*3. The reset command through the RS terminal or STOP/RESET key is not accepted. Turn off the power.

Name	Description	Display on Digital Operator	Check point and remedy	Reference page
Undervoltage trip	Shuts off the output if the incoming voltage drops below the specified level. This is because the control circuit fails to work properly when the incoming voltage to the Inverter drops. Trips when the DC voltage between P and N drops to approximately 175 V DC for 200-V class, and 345 V DC for 400-V class.	E09.□	Has the power supply voltage decreased? (Check the power supply.) Is the power supply capacity sufficient? (Check the power supply.) Has the thyristor been broken? (Check the thyristor.)	—

*1. The reset command through the RS terminal or STOP/RESET key is not accepted. Turn off the power.

*2. The reset operation via the Digital Operator is not accepted. Be sure to reset via the RS terminal.

Name	Description	Display on Digital Operator	Check point and remedy	Reference page
CT error	Shuts off the output if an error occurs in the CT (current detector) built into the Inverter. Trips if the CT output is approximately 0.6 V or more when the power is turned on.	E 10	The Inverter has a failure. (Repair)	—
CPU error *1	Shuts off the output and displays an error if the internal CPU has worked erroneously or abnormally. Note: If an abnormal value is read from EEPROM, it may become a CPU error depending on the case.	E 11	Is there any large noise source around? (Countermeasures against noise) The Inverter has a failure. (Repair)	—
External trip	If an error occurs in the external equipment or devices, the Inverter receives the signal, and the output is shut off. (Available with the external trip function selected)	E 12	Has any error occurred in the external devices when the external trip function is selected? (Correct the external device error.)	4-82
USP trip	Appears when the power is turned on with the RUN signal input into the Inverter. (Available with the USP function selected)	E 13	When the USP function was selected, did you turn on the power with the RUN signal input into the Inverter? (Cancel the RUN command and turn on the power.)	4-82
Ground fault trip *1	Protects the Inverter if a ground fault between the Inverter output unit and the motor is detected when turning on the power. (This function does not work when there is residual voltage in the motor.)	E 14	Is there any ground fault? (Check the output wires and motor.) Is there any error in the Inverter itself? (Disconnect the output wires to check.) Is there any error in the main circuit? (Check the main circuit. Refer to Chapter 6.) (Repair)	—
Incoming overvoltage trip	Appears if the incoming voltage continues to be higher than the specification value for 100 seconds while the Inverter is stopped. Trips when the main circuit DC voltage reaches approximately 390 V DC for 200-V class, and 780 V DC for 400-V class.	E 15	Is the incoming voltage high while the Inverter is stopped? (Lower the incoming voltage, restrain the power supply fluctuation, apply the AC reactor to input.)	—
Momentary power interruption trip	Shuts off the output when a momentary power interruption occurs for 15 ms or more. If the shutoff time is long, it is normally recognized as a power shutoff. Note that, when restart is selected, the Inverter restarts at power-on as long as the RUN command remains.	E 16	Has the power supply voltage dropped? (Power recovery) Is there a contact failure for MCB and/or Mg? (Replace MCB, Mg.)	4-60

*1. The reset command through the RS terminal or STOP/RESET key is not accepted. Turn off the power.

*2. The reset operation via the Digital Operator is not accepted. Be sure to reset via the RS terminal.

Name	Description	Display on Digital Operator	Check point and remedy	Reference page
Temperature error when the rotation speed of the cooling fan decreases	Appears if a decrease of the cooling fan rotation speed has been detected when a temperature error occurs.	E20.0	Has the cooling efficiency been reduced? (Replace the cooling fan.) Is there any clogging in the fin? (Clean the fin.)	4-101
Temperature error	Shuts off the output if the temperature has risen in the main circuit because of the high ambient temperature.	E21.0	Have you installed the Inverter vertically? (Installation check) Is the ambient temperature high? (Decrease the ambient temperature.)	—
Gate array communications error	Trips when a fault is detected in communication behavior between the built-in CPU and the gate array.	E23.0	Is there any large noise source around? (Countermeasures against noise) Has the cable been disconnected? (Check the connector.)	4-16
Input open phase trip	Prevents Inverter damage due to input phase loss when the input phase loss protection selection is enabled (b006=01), and trips. Trips when the phase loss time is approximately 1 s or more.	E24.0	Is there any input power supply phase loss? (Check the input wiring.) Is there a contact failure for MCB and/or Mg? (Replace MCB, Mg.)	4-46
Main circuit error *1	Trips when the gate array cannot confirm IGBT ON/OFF because of a main element failure, a load short circuit, or an erroneous operation resulting from noise interfusion.	E25.0	Is there any large noise source around? (Countermeasures against noise) Has the main element been damaged? Is there any output short-circuit? (Check the IGBT.) The Inverter has a failure. (Repair)	4-16
IGBT error	Shuts off the Inverter output to protect the main element when a momentary overcurrent, temperature error in the main element, or drop of the main element driving power supply occurs. (Retry operation cannot be performed for this trip.)	E30.0	Is there any output short-circuit? (Check the output wires.) Is there any ground fault? (Check the output wires and motor.) Has the main element been damaged? (Check the IGBT.) Is there any clogging in the fin? (Clean the fin.)	—
Thermistor error	Shuts off the Inverter output when detecting the thermistor resistance value inside the motor connected to the TH terminal and resulting motor temperature rise.	E35.0	Is the motor temperature too high? (Check the motor temperature.) Is there any damage to the thermister inside the motor? (Check the thermistor.) Is there any noise interfusion in the thermister signal? (Separate the wiring.)	2-10 4-73

*1. The reset command through the RS terminal or STOP/RESET key is not accepted. Turn off the power.

*2. The reset operation via the Digital Operator is not accepted. Be sure to reset via the RS terminal.

Name	Description	Display on Digital Operator	Check point and remedy	Reference page
Brake error	When 01 is selected in b120 (brake control selection), this error appears if the brake ON/OFF cannot be confirmed within the b124 set time (brake confirmation wait time) after the Inverter outputs the brake release signal.	E36.□	Is the brake ON/OFF function working? (Brake check) Is the set time for b124 too short? (Increase b124.) Has the brake confirmation signal been input? (Wiring check)	4-73
Emergency shutoff *2	Shuts off the hardware output and displays an error when the EMR terminal (S3) is turned on with SW1 on the logic board ON.	E37.□	Did any error occur in the external devices when the emergency shutoff function was selected? (Correct the external device error.)	2-10
Overload trip in low speed range	If an overload is detected in the lowest speed range of 0.2 Hz max., an electronic thermal inside the Inverter works to shut off the Inverter output. (2nd electronic thermal) (However, higher frequency could remain in the error history.)	E38.□	Is the load too large? (Reduce the loading factor.)	4-49 4-50
ModBus communications error	Appears when the timeout occurs because of disconnection during Modbus-RTU communication. (Trip by the C076 setting)	E41.□	Is the communication speed correct? Is the wiring distance appropriate? (Connection check)	4-139
Option 1 error	Detects an error on the board mounted on option port 1.	E60.□ to E69.□	Has the option board been securely mounted? (Check that the mounting is correct.)	—
Option 2 error	Detects an error on the board mounted on option port 2.	E70.□ to E79.□	Has the option board been securely mounted? (Check that the mounting is correct.)	—
Undervoltage standby	Shows the waiting status after the incoming Inverter voltage decreases and shuts off. This error also appears during momentary power interruption.	----	Has the power supply voltage dropped? (Power recovery) Is there a contact failure for MCB and/or Mg? (Replace MCB, Mg.) Is the voltage between P and N normal? (Check the voltage between P and N.)	—
Communications error	Appears if an error occurs between the Digital Operator and the Inverter.	----	Has the relay plug been inserted properly? (Check the relay plug contact.) Has the Digital Operator been inserted properly? (Check the Digital Operator contact.)	—

*1. The reset command through the RS terminal or STOP/RESET key is not accepted. Turn off the power.

*2. The reset operation via the Digital Operator is not accepted. Be sure to reset via the RS terminal.

Name	Description	Display on Digital Operator	Check point and remedy	Reference page
Retry standby	Appears in the restart standby status when the momentary power interruption/trip retry functions are enabled.	0000	—	4-42
Power shutoff	Appears when the power is shut off.	- - - -	—	—
RUN command is limited	Appears if the limited RUN command is received while the rotation direction is limited with b035.	- - - -	—	4-52

*1. The reset command through the RS terminal or STOP/RESET key is not accepted. Turn off the power.

*2. The reset operation via the Digital Operator is not accepted. Be sure to reset via the RS terminal.

Option Board Protection Function List

E6*.□(OP1-*) appears when the option board is mounted on option port 1 (Digital Operator connecter side) , and E7*.□(OP2-*) appears when it is mounted on option port 2 (control circuit terminal block side).

•Protection function list when the PG board (3G3AX-PG01) is mounted

Name	Description	Display on Digital Operator
Encoder disconnection	Shuts off the output and displays an error when the encoder wiring disconnection or connection failure is detected, the encoder is damaged, or an encoder except for line driver output is used.	E60.□ E70.□
Excess speed	Shuts off the output and displays an error when the motor rotation exceeds the maximum frequency (A004) × the overspeed error detection level (P026).	E61.□ E71.□
Positioning error	Shuts off the output and displays an error when the current position deviation against the position reference value exceeds 1,000,000 pulses during position control.	E62.□ E72.□
Position control range trip	Shuts off the output and displays an error when the current position exceeds the setting values of the position range specification for Forward (P072) and Reverse (P073) during absolute position control.	E63.□ E73.□
3G3AX-PG01 connection error	Shuts off the output and displays an error if a connection (mounting) failure of the PG board is detected.	E69.□ E79.□

Note: Check the DIP switch settings on the PG board for any abnormal operation.

Function List of the DIP Switches on the PG Board (3G3AX-PG01)

DIP switch	Switch No.	Description	
SWENC	1	ON	Disconnection detection enabled when the encoder A/B-phase is not connected
		OFF	Disconnection detection disabled when the encoder A/B-phase is not connected
	2	ON	Disconnection detection enabled when the encoder Z-phase is not connected
		OFF	Disconnection detection disabled when the encoder Z-phase is not connected
SWR	1	ON	With the termination resistor between SAP and SAN (150 Ω)
		OFF	Without the termination resistor between SAP and SAN
	2	ON	With the termination resistor between SBP and SBN (150 Ω)
		OFF	Without the termination resistor between SBP and SBN

•Protection function display when the digital command board (3G3AX-DI01) is mounted

Name	Description	Display on Digital Operator
3G3AX-DI01 error	Shuts off the output and displays an error if a timeout occurs in communication between the Inverter and digital command board.	E60.□ E70.□

Note: Input mode is determined by the combination of DIP and rotary switches. Check the settings of the DIP and rotary switches on the digital command board for any abnormal operation.

Function List of the DIP and Rotary Switches on the digital command board (3G3AX-DI01)

DIP switch (TYPE)		Rotary switch (CODE)	Resolution setting								
			Set frequency				Acceleration/Deceleration time setting			Torque limit setting	Position setting
Switch No.		Setting code	0.01 Hz	0.1 Hz	1 Hz	Rate	0.01 sec	0.1 sec	1 sec	1%	1 pulse
1	2										
ON: BCD input (BCD) OFF: Binary input (BIN)	OFF: Batch input mode (PAC)	0	○								
		1		○							
		2			○						
		3				○					
		4								○	
		5	For factory adjustment (Do not set)								
		6									○
		7 to F	For factory adjustment (Do not set)								
	ON: Dividing input mode (DIV)	0	○				○			○	○
		1						○			
		2							○		
		3		○			○				
		4						○			
		5							○		
		6			○		○				
		7						○			
		8							○		
		9				○	○				
		A						○			
		B							○		
		C to F	For factory adjustment (Do not set)								

How to Read the Input Mode List

Example 1. Switch setting when setting the frequency with a resolution of 1 Hz, via binary input (BIN) in the batch input mode (PAC)

TYPE		CODE
1	2	2
OFF: BIN	OFF: PAC	

Example 2. Switch setting when setting the frequency with a resolution of 0.1 Hz, via BCD input, and setting the acceleration/deceleration time with a resolution of 0.1 sec, via BCD input in the dividing input mode (DIV)

TYPE		CODE
1	2	4
ON: BCD	ON: DIV	

Trip Monitor Display

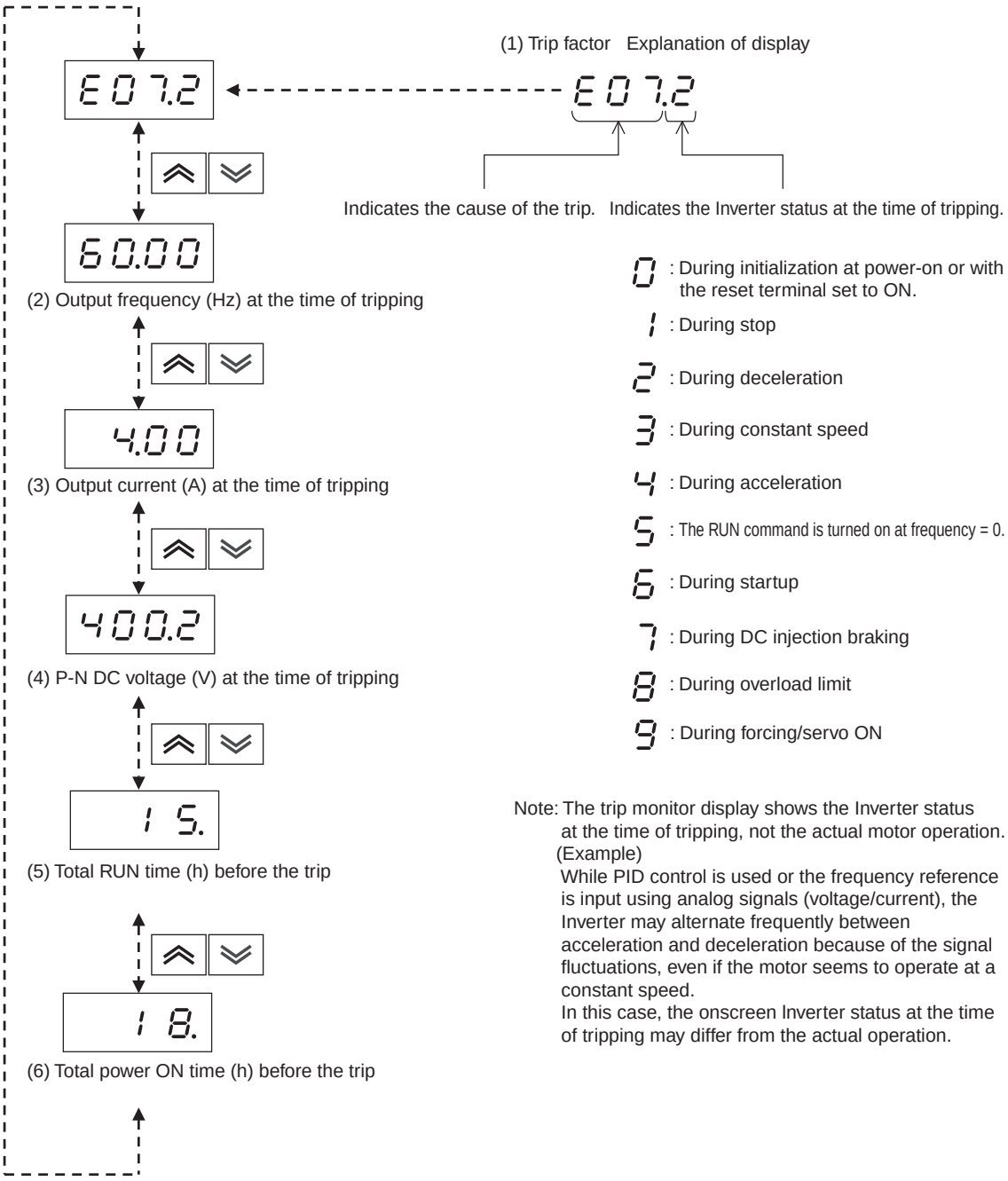

Note: The trip monitor display shows the Inverter status at the time of tripping, not the actual motor operation.
(Example)
While PID control is used or the frequency reference is input using analog signals (voltage/current), the Inverter may alternate frequently between acceleration and deceleration because of the signal fluctuations, even if the motor seems to operate at a constant speed.
In this case, the onscreen Inverter status at the time of tripping may differ from the actual operation.

5-2 Warning Function

• The following table shows the details of warning display and parameter correction.

Warning display	Target code	Condition	Base code
001/201	Frequency upper limit A061/A261	>	Maximum frequency A004/A204/A304
002/202	Frequency lower limit A062/A262	>	
004/204/304	Base frequency A003/A203/A303 *1	>	
005/205/305	Output frequency F001, Multi-step speed reference 0 A020/A220/A320 *2	>	
006/206/306	Multi-step speeds 1 to 15 A021 to A035	>	
009	Orientation speed setting P015	>	
012/212	Frequency lower limit A062/A262	>	Frequency upper limit A061/A261
015/215	Output frequency F001, Multi-step speed reference 0 A020/A220 *2	>	
016/216	Multi-step speeds 1 to 15 A021 to A035	>	
019	Frequency upper limit A061/A261	<	Orientation speed P015
021/221		<	Frequency lower limit A062/A262
025/225	Output frequency F001, Multi-step speed reference 0 A020/A220/A320 *2	<	
031/231	Frequency upper limit A061/A261	<	Starting frequency b082
032/232	Frequency lower limit A062/A262	<	
035/235/335	Output frequency F001, Multi-step speed reference 0 A020/A220/A320 *2	<	
036	Multi-step speeds 1 to 15 A021 to A035	<	
037	Jogging frequency A038	<	
085/285/385	Output frequency F001, Multi-step speed reference 0 A020/A220/A320 *2	< >	Jump frequency 1/2/3 ± Jump width A063 ± A064 A065 ± A066 A067 ± A068 *3
086	Multi-step speeds 1 to 15 A021 to A035	< >	

*1. In this case, the base frequency is rewritten when correcting parameters. Change the data to a correct value if a warning occurs. Otherwise, the motor may burn out depending on the value.

*2. Checks even if the frequency reference selection (A001) is set other than to the Digital Operator (02).

*3. The jump frequency is rewritten into the value of the subtraction of the jump width (lower limit) from the jump frequency.

Warning display	Target code	Condition	Base code
091/291	Frequency upper limit A061/A261	>	Free V/f frequency 7 b112
092/292	Frequency lower limit A062/A262	>	
095/295	Output frequency F001, Multi-step speed reference 0 A020/ A220 *2	>	
096	Multi-step speed reference 1 to 15 A021 to A035	>	
110	Free V/f frequencies 1 to 6 b100, b102, b104, b106, b108, b110	>	
	Free V/f frequencies 2 to 6 b102, b104, b106, b108, b110	<	Free V/f frequency 1 b100
	Free V/f frequency 1 b100	>	Free V/f frequency 2 b102
	Free V/f frequencies 3 to 6 b104, b106, b108, b110	<	
	Free V/f frequencies 1, 2 b100, b102	>	Free V/f frequency 3 b104
	Free V/f frequencies 4 to 6 b106, b108, b110	<	
	Free V/f frequencies 1 to 3 b100, b102, b104	>	Free V/f frequency 4 b106
	Free V/f frequencies 5, 6 b108, b110	<	
	Free V/f frequencies 1 to 4 b100, b102, b104, b106	>	Free V/f frequency 5 b108
	Free V/f frequency 6 b110	<	
	Free V/f frequencies 1 to 5 b100, b102, b104, b106, b108	>	Free V/f frequency 6 b110
120	Free electric thermal frequencies 2, 3 b017, b019	<	Free electric thermal frequency 1 b015
	Free electric thermal frequency 1 b015	>	Free electric thermal frequency 2 b017
	Free electric thermal frequency 3 b019	<	
	Free electric thermal frequencies 1 2 b015, b017	>	Free electric thermal frequency 3 b019

*1. In this case, the base frequency is rewritten when correcting parameters. Change the data to a correct value if a warning occurs. Otherwise, the motor may burn out depending on the value.

*2. Checks even if the frequency reference selection (A001) is set other than to the Digital Operator (02).

*3. The jump frequency is rewritten into the value of the subtraction of the jump width (lower limit) from the jump frequency.

• Warning appears when a target code set data meets the condition shown above in relation to the base code data.

• Parameters are rewritten into the data of the base code. (rewritten at start-up)

Chapter 6

Inspection and Maintenance

6-1 Inspection and Maintenance 6-1

6-1 Inspection and Maintenance

⚠ WARNING	
	Do not change wiring and slide switches (SW1), put on or take off Digital Operator and optional devices, replace cooling fans while the input power is being supplied. Doing so may result in a serious injury due to an electric shock.
	Do not remove the terminal block cover during the power supply and 10 minutes after the power shutoff. Doing so may result in a serious injury due to an electric shock.

⚠ CAUTION	
	Do not touch the Inverter fins, braking resistors and the motor, which become too hot during the power supply and for some time after the power shutoff. Doing so may result in a burn.
	Do not dismantle, repair or modify this product. Doing so may result in an injury.

Safety Information

■Maintenance and Inspection

- Be sure to confirm safety before conducting maintenance, inspection or parts replacement.

Precautions for Use

■Operation Stop Command

- Provide a separate emergency stop switch because the STOP key on the Digital Operator is valid only when function settings are performed.
- When checking a signal during the power supply and the voltage is erroneously applied to the control input terminals, the motor may start abruptly. Be sure to confirm safety before checking a signal.

■Product Disposal

- Comply with the local ordinance and regulations when disposing of the product.

Daily Inspection

- Basically, check the following during operation.
  - The motor operates according to the settings.
  - There are no errors in the installation environment.
  - There are no errors in the cooling system.
  - There are no abnormal vibrations or sounds.
  - There are no abnormal overheat or discoloration.
  - There are no abnormal odors.

- Check the input voltage of the Inverter during operation using a tester or other equipment.
  - There is no frequent power supply voltage fluctuation.
  - The voltage level between the wires is balanced.

Cleaning

- Always keep the Inverter clean for operation.
- Lightly remove any dirt with a soft cloth moistened with a neutral detergent.

Note:
Do not use such solutions as acetone, benzene, toluene, or alcohol for cleaning. Doing so may cause the Inverter surface to dissolve or its coating to come off.
Do not use any detergent or alcohol to clean the Digital Operator display.

Periodic Inspection

- Check the parts that cannot be checked without stopping operation, as well as those that require periodic inspection.
- Contact OMRON Corporation for periodic inspections.

  - Check that there are no errors in the cooling system.
    ..... Clean the air filter.
  - Check that all parts that need tightening are secure.
    ..... Screws and bolts may become loose because of vibration or temperature change.
  - Check that there is no corrosion or damage to the conductors and/or insulators.
  - Measurement of insulation resistance.
  - Check and replace the cooling fan, smoothing capacitor, and relay.

■Daily Inspection and Periodic Inspection

Inspection part	Inspection item	Inspection point	Inspection period			Inspection method	Criteria	Meter
			Daily	Periodic				
				1 year	2 years			
General	Ambient environment	Check ambient temperature, as well as humidity and dust levels.	○			Refer to "2-1 Installation".	Ambient temperature 10°C to 50°C, no freezing. Ambient humidity 90% max., no condensation.	Thermometer Hygrometer Recorder
	Entire device	Check that there are no abnormal vibrations or sounds.	○			Visual or acoustic inspection	No faults	
	Power supply voltage	Check that the main circuit voltage is normal.	○			Measure the voltage between Inverter main circuit terminals R/L1, S/L2, and T/L3.	Must be within allowable fluctuation of AC voltage.	Tester, digital multimeter
Main circuit	General	Megger check (between main circuit terminal and ground terminal)		○		Disconnect the I/O wirings of the Inverter main circuit terminal block, detach the control terminal block board, and remove the short-circuit bar used for switching the Inverter built-in filter function. Then, use a megger to measure the resistance between the ground terminal and the short-circuited parts of terminals R/L1, S/L2, T/L3, U/T1, V/T2, W/T3, P/+2, +1, N/-, RB, Ro, and To.	5 MΩ min.	500 V DC megger

*1. The life of the smoothing capacitor depends on ambient temperatures.
Refer to "Appendix-2 Product Life Curve" for the replacement reference.
*2. The life of the cooling fan varies depending on the environmental conditions, such as ambient temperature and/or dust. Check the operation through daily inspections.
*3. The replacement reference (year/cycle) or "Appendix-2 Product Life Curve" is based on the expected design life, which is not guaranteed.

Inspection part	Inspection item	Inspection point	Inspection period			Inspection method	Criteria	Meter
			Daily	Periodic				
				1 year	2 years			
Main circuit	General	Check that any parts which may need tightening are secure.		○		Tighten securely.	No faults	
		Check that no part has indications of overheating.		○		Visual inspection	No faults	
	Connection conductor and wire	Check that there is no distortion with the conductor.		○		Visual inspection	No faults	
		Check that there is no tearing in the wire coverings.		○				
	Terminal block	Check that there is no damage.		○		Visual inspection	No faults	
	Inverter unit Converter unit (including the resistor)	Check the resistance between the terminals.			○	Disconnect the wiring of the Inverter main circuit terminal block and measure the resistance levels between terminals R/L1, S/L2, T/L3 and P/+2, N/-, and between U/T1, V/T2, W/T3 and P/+2, N/- in the range of tester × 1 Ω.	Refer to "Checking the Inverter and Converter". Inverter unit replacement reference Start/Stop: Cycle 10^6 *3	Analog tester
	Smoothing capacitor	Check that there is no liquid leakage.	○			Visual inspection	No faults Reference of the replacement period: 10 years *2 *3	Capacity meter
		Check that the safety valve has not come out and that there are no bulges.	○					
	Relay	Check that there is no abnormal sound during operation.		○		Acoustic inspection	No faults	
		Check that there is no rough surface on the contact.		○		Visual inspection	No faults	

*1. The life of the smoothing capacitor depends on ambient temperatures.
Refer to "Appendix-2 Product Life Curve" for the replacement reference.

*2. The life of the cooling fan varies depending on the environmental conditions, such as ambient temperature and/or dust. Check the operation through daily inspections.

*3. The replacement reference (year/cycle) or "Appendix-2 Product Life Curve" is based on the expected design life, which is not guaranteed.

Inspection part	Inspection item	Inspection point	Inspection period			Inspection method	Criteria	Meter
			Daily	Periodic				
				1 year	2 years			
Control circuit Protection circuit	Operation check	Check the balance of output voltage levels between phases in single Inverter run.		○		Measure the voltage between Inverter main circuit terminals U/T1, V/T2, and W/T3.	Phase-to-phase voltage balance 200-V class: 4 V max. 400-V class: 8 V max.	Digital multimeter Rectifier Voltmeter
		Check that there are no errors in protection and display circuits through sequence protection operation.		○		Short-circuit or open the Inverter protection circuit output under simulated conditions.	Error is found in the sequence.	
Cooling system	Cooling fan	Check that there are no abnormal vibrations or sounds.	○			Rotate manually when the power is off.	Rotates smoothly. No faults Reference of the replacement period: 10 years *2 *3	
		Check that the connection parts are secure.		○		Visual inspection		
	Fin	Check that there is no clogging.		○		Visual inspection	No clogging.	
Display	Display	Check that the LED indicators are lit properly.	○			Visual inspection	Check that the LED indicators are lit properly.	
		Cleaning		○		Clean with a waste cloth.		
	Meter	Check that the indicated value is normal.	○			Check the indicated values on the panel meters.	The specified or control values must be satisfied.	Voltmeter, ammeter

*1. The life of the smoothing capacitor depends on ambient temperatures.
Refer to "Appendix-2 Product Life Curve" for the replacement reference.

*2. The life of the cooling fan varies depending on the environmental conditions, such as ambient temperature and/or dust. Check the operation through daily inspections.

*3. The replacement reference (year/cycle) or "Appendix-2 Product Life Curve" is based on the expected design life, which is not guaranteed.

Inspection part	Inspection item	Inspection point	Inspection period			Inspection method	Criteria	Meter
			Daily	Periodic				
				1 year	2 years			
Motor	General	Check that there are no abnormal vibrations or sounds.	○			Acoustic, feeling, and/or visual inspection	No faults	
		Check that there are no abnormal odors.	○			Check that there is no abnormal odor caused by damage or overheating.	No faults	
	Insulation resistance	Megger check (Between the collective motor terminals and ground terminal)			○	Disconnect Inverter main circuit terminals U/T1, V/T2, and W/T3, and short-circuit the 3-phase motor wires. Then, use a megger to measure the resistance between the motor wire and ground terminal.	5 MΩ min.	500 V DC megger

*1. The life of the smoothing capacitor depends on ambient temperatures.
Refer to "Appendix-2 Product Life Curve" for the replacement reference.
*2. The life of the cooling fan varies depending on the environmental conditions, such as ambient temperature and/or dust. Check the operation through daily inspections.
*3. The replacement reference (year/cycle) or "Appendix-2 Product Life Curve" is based on the expected design life, which is not guaranteed.

Megger test

- For a megger test of the external circuit, be sure to disconnect all the terminals of the Inverter so as not to apply the test voltage to the Inverter.
- Use a high resistance tester for a power distribution test of the control circuit. Do not use a megger or buzzer.
- Conduct an Inverter megger test only to the main circuit, not to the control circuit.
- Use a 500 V DC megger for a megger test.
- For a megger test of the Inverter main circuit, remove the short-circuit bar used for switching the Inverter built-in filter function and then short-circuit terminals R/L1, S/L2, T/L3, U/T1, V/T2, W/T3, P/+2, +1, N/-, RB, Ro, and To with the wires, as shown below.
  After the megger test, remove the short-circuit wires from terminals R/L1, S/L2, T/L3, U/T1, V/T2, W/T3, P/+2, +1,
  N/-, RB, Ro, and To, and reconnect the short-circuit bar for switching the Inverter built-in filter function.
  Note that the RB terminal is provided only for the Inverters with 22 kW or lower capacity.

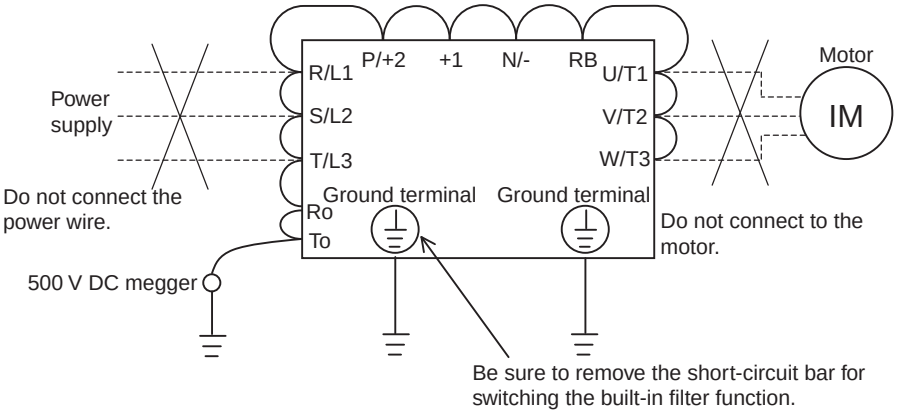

Withstand Voltage Test

Do not conduct a withstand voltage test on any part of the Inverter.
Doing the test is dangerous and may cause damage or deterioration to the parts inside the Inverter.

Checking the Inverter and Converter

- The quality of the Inverter and converter can be checked using a tester.

(Preparation)
Disconnect the externally connected power supply wires (R/L1, S/L2, T/L3), the motor connection wires (U/T1, V/T2, W/T3), and the regenerative braking resistance (P/+2, RB).
Prepare a tester. (Usable range is 1 Ω measurement resistance.)

(Checking method)
- The quality can be judged by measuring the conduction state of Inverter main circuit terminal blocks R/L1, S/L2, T/L3, U/T1, V/T2, W/T3, RB, P/+2, and N/- while alternating the tester polarity.

Note 1: Before checking, measure the voltage between P/+2 and N/- at DC voltage range in advance, and confirm that the smoothing capacitor is sufficiently discharged.

Note 2: A nearly infinite value is shown in a no-conduction state.
However, the value may not be infinite if the momentary conduction occurs through the influence of the smoothing capacitor
The value shown ranges from a few to a few dozen Ω in a conduction state.
The Inverter or converter is in good shape if the values from various parameters are nearly equal, though they are not consistent depending on the types of elements or testers.

Note 3: The regenerative braking circuit is provided for Inverters with a capacity of 22 kW or lower.

		Tester polarity		Measurement value
		+ (red)	- (black)	
Converter unit	D1	R/L1	+1	No conduction
		+1	R/L1	Conduction
	D2	S/L2	+1	No conduction
		+1	S/L2	Conduction
	D3	T/L3	+1	No conduction
		+1	T/L3	Conduction
	D4	R/L1	N/-	Conduction
		N/-	R/L1	No conduction
	D5	S/L2	N/-	Conduction
		N/-	S/L2	No conduction
	D6	T/L3	N/-	Conduction
		N/-	T/L3	No conduction
Inverter unit	TR1	U/T1	P/+2	No conduction
		P/+2	U/T1	Conduction
	TR2	V/T2	P/+2	No conduction
		P/+2	V/T2	Conduction
	TR3	W/T3	P/+2	No conduction
		P/+2	W/T3	Conduction
	TR4	U/T1	N/-	Conduction
		N/-	U/T1	No conduction
	TR5	V/T2	N/-	Conduction
		N/-	V/T2	No conduction
	TR6	W/T3	N/-	Conduction
		N/-	W/T3	No conduction
Regenerative braking circuit	TR7	RB	P/+2	No conduction
		P/+2	RB	Conduction
		RB	N/-	No conduction
		N/-	RB	No conduction

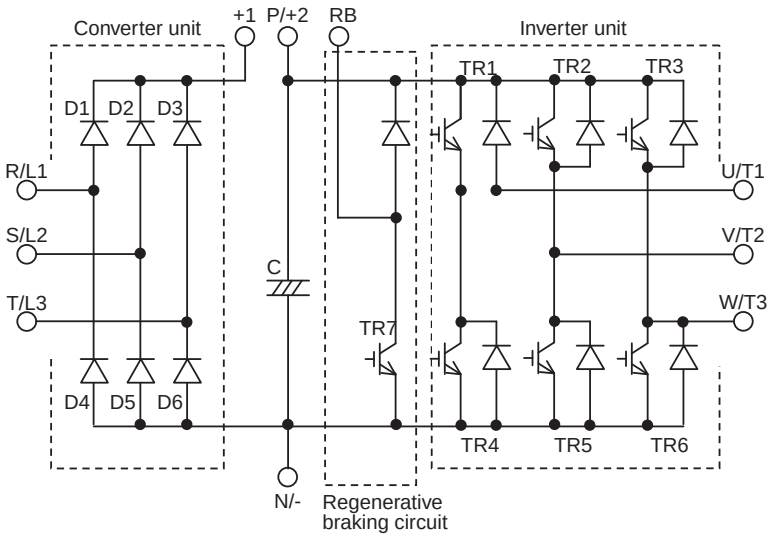

■Measurement Methods of I/O Voltage, Current, and Electric Power

Below is a general measurement device for input/output voltages, current, and electric power.

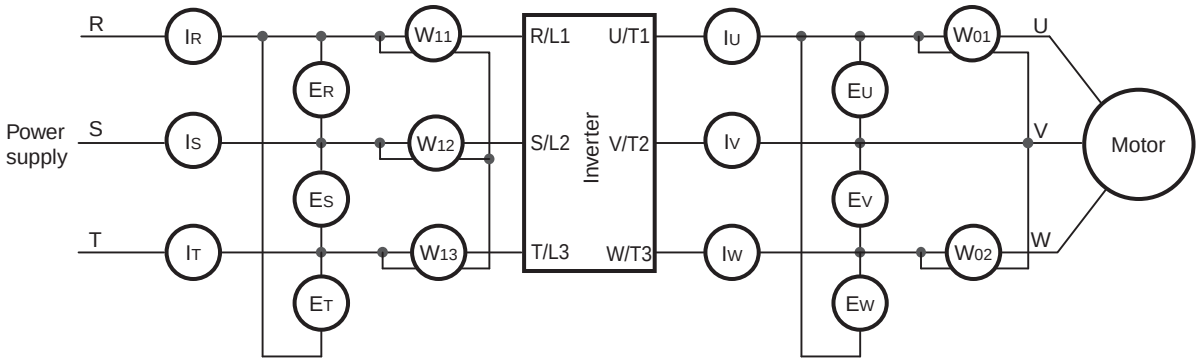

Measurement item	Measurement point	Measurement device	Note	Measurement value reference
Power supply voltage E_{IN}	Between R-S, S-T, and T-R (E_R), (E_S), (E_T)	Moving-iron voltmeter or Rectifier voltmeter	All effective values	200-V class: 200 to 240 V, 50/60 Hz 400-V class: 380 to 480 V, 50/60 Hz
Power supply current I_{IN}	Current R, S, T (I_R), (I_S), (I_T)	Moving iron ammeter	All effective values	When the input current is not balanced $I_{IN} = (I_R+I_S+ I_T)/3$
Input electric power W_{IN}	Between R-S, S-T, and T-R (W_{I1}) + (W_{I2}) + (W_{I3})	Electrodynamic wattmeter	All effective values	Three-wattmeter method
Input power factor Pf_{IN}	Calculated from the measured values of power supply voltage E_{IN}, power supply current I_{IN}, and input electric power W_{IN}. $Pf_{IN} = \frac{W_{IN}}{\sqrt{3} \cdot E_{IN} \cdot I_{IN}} \times 100(\%)$			
Output voltage E_{OUT}	Between U-V, V-W, W-U (E_U), (E_V), (E_W)	See the figure below or Rectifier voltmeter	Effective value of fundamental wave	
Output current I_{OUT}	Current U, V, W (I_U), (I_V),(I_W)	Moving iron ammeter	All effective values	
Output power W_{OUT}	Between U-V, V-W (W_{O1})+(W_{O2})	Electrodynamic wattmeter	All effective values	Two-wattmeter method (or three-wattmeter method)
Output power factor Pf_{OUT}	Calculated from the measured values of output voltage E_{OUT}, output current I_{OUT}, and output power W_{OUT}. $Pf_{OUT} = \frac{W_{OUT}}{\sqrt{3} \cdot E_{OUT} \cdot I_{OUT}} \times 100(\%)$			

Note 1: For output voltage, use a measurement device that displays effective values of fundamental wave. For current and electric power, use a measurement device that displays all effective values.
Note 2: The Inverter output waveform, under PWM control, has a margin of error, especially at a low frequency.
Note 3: General-purpose testers are not applicable because of noise in many cases.

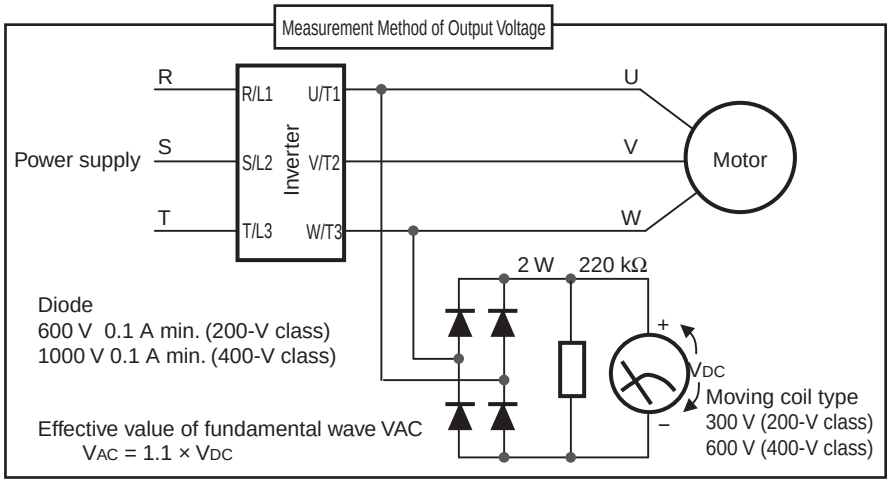

Chapter 7

Specifications

7-1 Standard Specification List..... 7-1
7-2 Dimensional Drawing..... 7-6
7-3 Options..... 7-14

7-1 Standard Specification List

■Three-phase 200-V Class

Class		3-phase 200 V										
Model name (3G3RX-)		A2004	A2007	A2015	A2022	A2037	A2055	A2075	A2110	A2150	A2185	A2220
Max. applicable motor 4P	kW	0.4	0.75	1.5	2.2	3.7	5.5	7.5	11	15	18.5	22
Rated output capacity (kVA)	200 V	1.0	1.7	2.5	3.6	5.7	8.3	11.0	15.9	22.1	26.3	32.9
	240 V	1.2	2.0	3.1	4.3	6.8	9.9	13.3	19.1	26.6	31.5	39.4
Rated input voltage		3-phase (3-wire) 200 V -15% to 240 V +10%, 50/60 Hz ±5%										
Rated output voltage		3-phase: 200 to 240 V (Cannot exceed that of incoming voltage.)										
Rated output current (A)		3.0	5.0	7.5	10.5	16.5	24	32	46	64	76	95
Radio noise filter		Built-in										
Weight (kg)		3.5	3.5	3.5	3.5	3.5	6	6	6	14	14	14
Braking	Regenerative braking	Built-in braking resistor circuit (discharge resistor separately mounted)										
	Minimum connection resistance (Ω)	50	50	35	35	35	16	10	10	7.5	7.5	5

Class		3-phase 200 V			
Model name (3G3RX-)		A2300	A2370	A2450	A2550
Max. applicable motor 4P	kW	30	37	45	55
Rated output capacity (kVA)	200 V	41.9	50.2	63.0	76.2
	240 V	50.2	60.2	75.6	91.4
Rated input voltage		3-phase (3-wire) 200 V -15% to 240 V +10%, 50/60 Hz ±5%			
Rated output voltage		3-phase: 200 to 240 V (Cannot exceed that of incoming voltage.)			
Rated output current (A)		121	145	182	220
Radio noise filter		Built-in			
Weight (kg)		22	30	30	43
Braking	Regenerative braking	Regenerative braking unit separately mounted			
	Minimum connection resistance (Ω)	—			

■Three-phase 400-V Class

Class		3-phase 400 V										
Model name (3G3RX-)		A4004	A4007	A4015	A4022	A4037	A4055	A4075	A4110	A4150	A4185	A4220
Max. applicable motor 4P	kW	0.4	0.75	1.5	2.2	3.7	5.5	7.5	11	15	18.5	22
Rated output capacity (kVA)	400 V	1.0	1.7	2.5	3.6	6.2	9.7	13.1	17.3	22.1	26.3	33.2
	480 V	1.2	2.0	3.1	4.3	7.4	11.6	15.8	20.7	26.6	31.5	39.9
Rated input voltage		3-phase (3-wire) 380 V -15% to 480 V +10%, 50/60 Hz ±5%										
Rated output voltage		3-phase: 380 to 480 V (Cannot exceed that of incoming voltage.)										
Rated output current (A)		1.5	2.5	3.8	5.3	9.0	14	19	25	32	38	48
Radio noise filter		Built-in										
Weight (kg)		3.5	3.5	3.5	3.5	3.5	6	6	6	14	14	14
Braking	Regenerative braking	Built-in braking resistor circuit (discharge resistor)										
	Minimum connection resistance (Ω)	100	100	100	100	70	70	35	35	24	24	20

Class		3-phase 400 V							
Model name (3G3RX-)		A4300	A4370	A4450	A4550	A4750	A4900	A411K	A413K
Max. applicable motor 4P	kW	30	37	45	55	75	90	110	132
Rated output capacity (kVA)	400 V	40.1	51.9	63.0	77.6	103.2	121.9	150.3	180.1
	480 V	48.2	62.3	75.6	93.1	128.3	146.3	180.4	216.1
Rated input voltage		3-phase (3-wire) 380 V -15% to 480 V +10%, 50/60 Hz ±5%							
Rated output voltage		3-phase: 380 to 480 V (Cannot exceed that of incoming voltage.)							
Rated output current (A)		58	75	91	112	149	176	217	260
Radio noise filter		Built-in							
Weight (kg)		22	30	30	30	60	60	80	80
Braking	Regenerative braking	Regenerative braking unit separately mounted							
	Minimum connection resistance (Ω)	—							

■Common Specifications

Item			Specifications
Enclosure rating			IP20
Cooling method			Forced air cooling
Control method			Phase-to-phase sinusoidal modulation PWM
Output frequency range			0.1 to 400 Hz
Frequency precision			Digital command: ±0.01% of the max. frequency Analog command: ±0.2% of the max. frequency (25°C ± 10°C)
Frequency resolution			Digital setting: 0.01 Hz Analog setting: Max. frequency/4000 (Terminal FV: 12 bits/0 to +10 V), (Terminal FE: 12 bits/-10 to +10 V), (Terminal FI: 12 bits/0 to +20 mA)
Voltage/Frequency characteristics			V/f optionally changeable at base frequencies of 30 to 400 Hz, V/f braking constant torque, reduction torque, sensor-less vector control, sensor-less vector control at 0 Hz
Speed fluctuation			±0.5% (under sensor-less vector control or sensor-less vector control at 0 Hz)
Overload current rating			150%/60 s, 200%/3 s
Acceleration/Deceleration time			0.01 to 3600.0 s (line/curve selection)
Starting torque			200%/0.3 Hz (under sensor-less vector control or sensor-less vector control at 0 Hz)
			150%/Torque at 0 Hz (under sensor-less vector control at 0 Hz, when a motor size one rank lower than specified is connected)
DC injection braking			Operates when the starting frequency is lower than that in deceleration via the STOP command, when the frequency reference is lower than the operation frequency, or via an external input (braking power, time, and frequency are variable)
Input	Frequency settings	Standard Digital Operator	Setting via keys
		External signal	0 to +10 V DC, -10 to +10 V DC (Input impedance: 10 kΩ) 4 to 20 mA (Input impedance: 100 Ω)
		External port	Setting through RS485 communication
	Forward or reverse operation/Stop	Standard Digital Operator	RUN/STOP (Forward/reverse switched via the parameter settings)
		External signal	Forward/Stop (Reverse/Stop available at the time of multi-functional input terminal allocation) 3-wire input available (at the time of control circuit terminal block allocation)
		External port	Setting through RS485 communication

Item		Specifications
Input	Multi-function input	8 terminals, NO/NC switchable, sink/source logic switchable [Terminal function] 8 functions can be selected from among 61. Reverse (RV), Multi-step speed setting binary 1 (CF1), Multi-step speed setting binary 2 (CF2), Multi-step speed setting binary 3 (CF3), Multi-step speed setting binary 4 (CF4), Jogging (JG), DC injection braking (DB), 2nd control (SET), 2-step acceleration/ deceleration (2CH), Free-run stop (FRS), External trip (EXT), USP function (USP), Commercial switching (CS), Soft lock (SFT), Analog input switching (AT), 3rd control (SET3), Reset (RS), 3-wire start (STA), 3-wire stop (STP), 3-wire forward/reverse (F/R), PID enabled/disabled (PID), PID integral reset (PIDC), Control gain switching (CAS), UP/DWN function accelerated (UP), UP/DWN function decelerated (DWN), UP/DWN function data clear (UDC), Forced operator (OPE), Multi-step speed setting bit 1 (SF1), Multi-step speed setting bit 2 (SF2), Multi-step speed setting bit 3 (SF3), Multi-step speed setting bit 4 (SF4), Multi-step speed setting bit 5 (SF5), Multi-step speed setting bit 6 (SF6), Multi-step speed setting bit 7 (SF7), Overload limit switching (OLR), Torque limit enabled (TL), Torque limit switching 1 (TRQ1), Torque limit switching 2 (TRQ2), P/PI switching (PPI), Brake confirmation (BOK), Orientation (ORT), LAD cancel (LAC), Position deviation clear (PCLR), Pulse train position command input permission (STAT), Frequency addition function (ADD), Forced terminal block (F-TM), Torque reference input permission (ATR), Integrated power clear (KHC), Servo ON (SON), Preliminary excitation (FOC), Analog command on hold (AHD), Position command selection 1 (CP1), Position command selection 2 (CP2), Position command selection 3 (CP3), Zero return limit signal (ORL), Zero return startup signal (ORG), Forward driving stop (FOT), Reverse driving stop (ROT), Speed/Position switching (SPD), Pulse counter (PCNT), Pulse counter clear (PCC), No allocation (no)
	Thermistor input terminal	1 terminal (Positive/Negative temperature coefficient of resistance element switchable)
Output	Multi-function output	5 open collector output terminals: NO/NC switchable, sink/source logic switchable 1 relay (SPDT contact) output terminal: NO/NC switchable [Terminal function] 6 functions can be selected from among 45. Signal during RUN (RUN), Constant speed arrival signal (FA1), Over set frequency arrival signal (FA2), Overload warning (OL), Excessive PID deviation (OD), Alarm signal (AL), Set-frequency-only arrival signal (FA3), Overtorque (OTQ), Signal during momentary power interruption (IP), Signal during undervoltage (UV), Torque limit (TRQ), RUN time exceeded (RNT), Power ON time exceeded (ONT), Thermal warning (THM), Brake release (BRK), Brake error (BER), 0-Hz signal (ZS), Excessive speed deviation (DSE), Position ready (POK), Set frequency exceeded 2 (FA4), Set frequency only 2 (FA5), Overload warning 2 (OL2), Analog FV disconnection detection (FVDc), Analog FI disconnection detection (FIDc), Analog FE disconnection detection (FEDc), PID FB status output (FBV), Network error (NDc), Logic operation output 1 (LOG1), Logic operation output 2 (LOG2), Logic operation output 3 (LOG3), Logic operation output 4 (LOG4), Logic operation output 5 (LOG5), Logic operation output 6 (LOG6), Capacitor life warning (WAC), Cooling fan life warning (WAF), Starting contact signal (FR), Fin overheat warning (OHF), Light load detection signal (LOC), Operation ready (IRDY), Forward run (FWR), Reverse run (RVR), Fatal fault (MJA), Window comparator FV (WCFV), Window comparator FI (WCFI), Window comparator FE (WCFE), Alarm codes 0 to 3 (AC0 to AC3)
	Multi-function monitor output terminal	Analog voltage output, Analog current output, Pulse train output (A-F, D-F {multiplied by "n", pulse output only}, A, T, V, P, etc.)
Display monitor		Output frequency, Output current, Output torque, Frequency conversion value, Trip record, I/O terminal status, Electric power, etc.

Item		Specifications
Other functions		V/f free setting (7), Upper/lower frequency limit, Frequency jump, Curve acceleration/ deceleration, Manual torque boost level/break, Energy-saving operation, Analog meter adjustment, Starting frequency, Carrier frequency adjustment, Electronic thermal function, (free setting available), External start/end (frequency/rate), Analog input selection, Trip retry, Restart during momentary power interruption, Various signal outputs, Reduced voltage startup, Overload limit, Initialization value setting, Automatic deceleration at power-off, AVR function, Automatic acceleration/deceleration, Auto tuning (Online/Offline), High-torque multi-motor operation control (sensor-less vector control of two monitors with one Inverter)
Carrier frequency modification range		0.5 to 15 kHz
Protective functions		Overcurrent protection, Overvoltage protection, Undervoltage protection, Electronic thermal protection, Temperature error protection, Momentary power interruption/Power interruption protection, Input phase loss protection, Braking resistor overload protection, Ground-fault current detection at power-on, USP error, External trip, Emergency shutoff trip, CT error, Communication error, Option error, etc.
Operating environment	Ambient/Storage temperature/ Humidity	-10°C to 50°C/-20°C to 65°C/20% to 90% RH (with no condensation)
	Vibration *	3G3RX-A□004 to A□220 5.9 m/s^2 (0.6G), 10 to 55 Hz 3G3RX-A□300 to A□550, A4750 to A413K 2.94 m/s^2 (0.3G), 10 to 55 Hz
	Location	At a maximum altitude of 1,000 m; indoors (without corrosive gases or dust)
Options	Feedback option	Sensor vector control
	Digital input option	4-digit BCD, 16-bit binary
Other options		Braking resistor, AC reactor, DC reactor, Digital Operator cables, Noise filter, Braking unit, etc.

* Complies with the test method specified in JIS C0040 (1999).
Note: Insulation distance complies with UL/CE standards.

7-2 Dimensional Drawing

■3G3RX-A2004/A2007/A2015/A2022/A2037
A4004/A4007/A4015/A4022/A4037

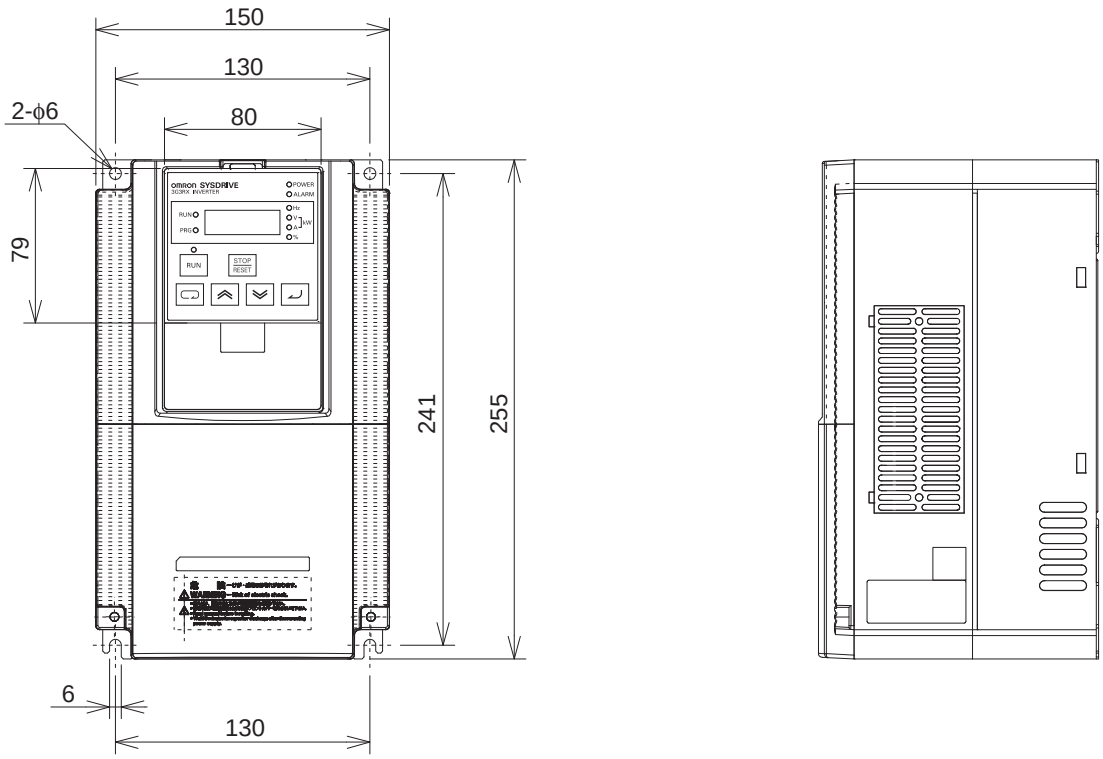

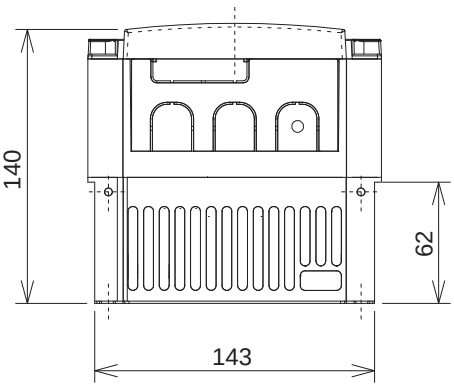

■3G3RX-A2055/A2075/A2110
A4055/A4075/A4110

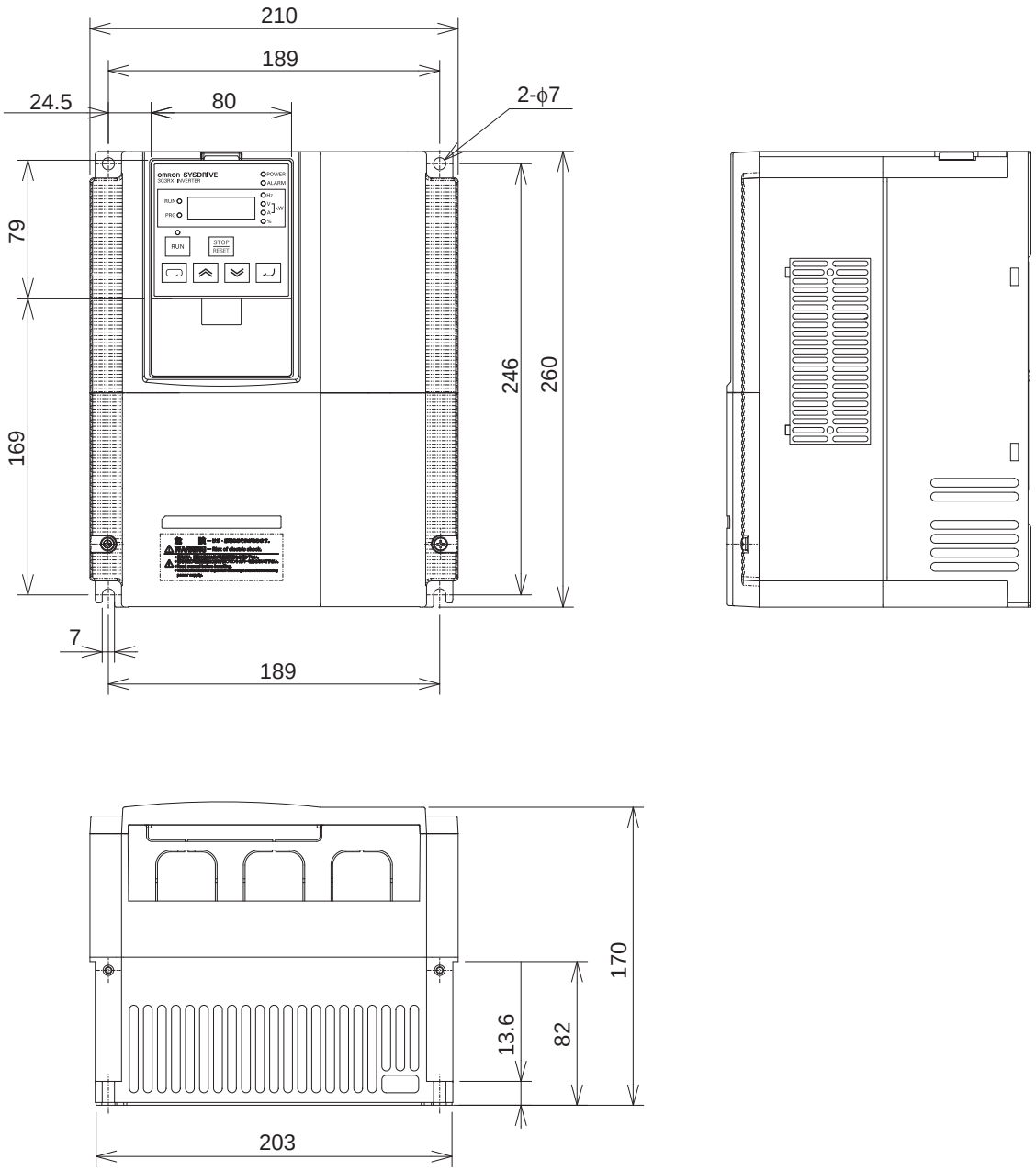

■3G3RX-A2150/A2185/A2220
A4150/A4185/A4220

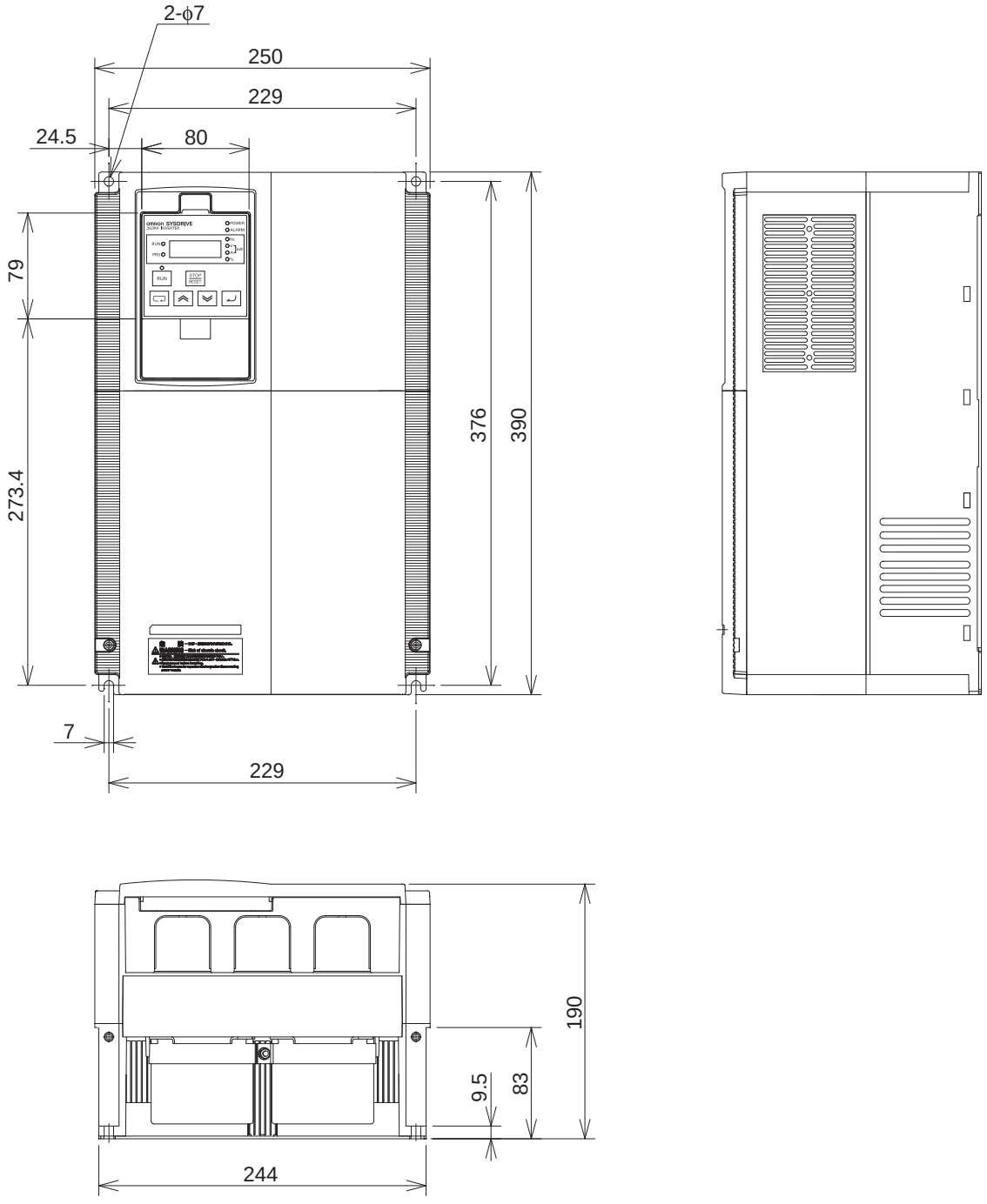

■3G3RX-A2300/A4300

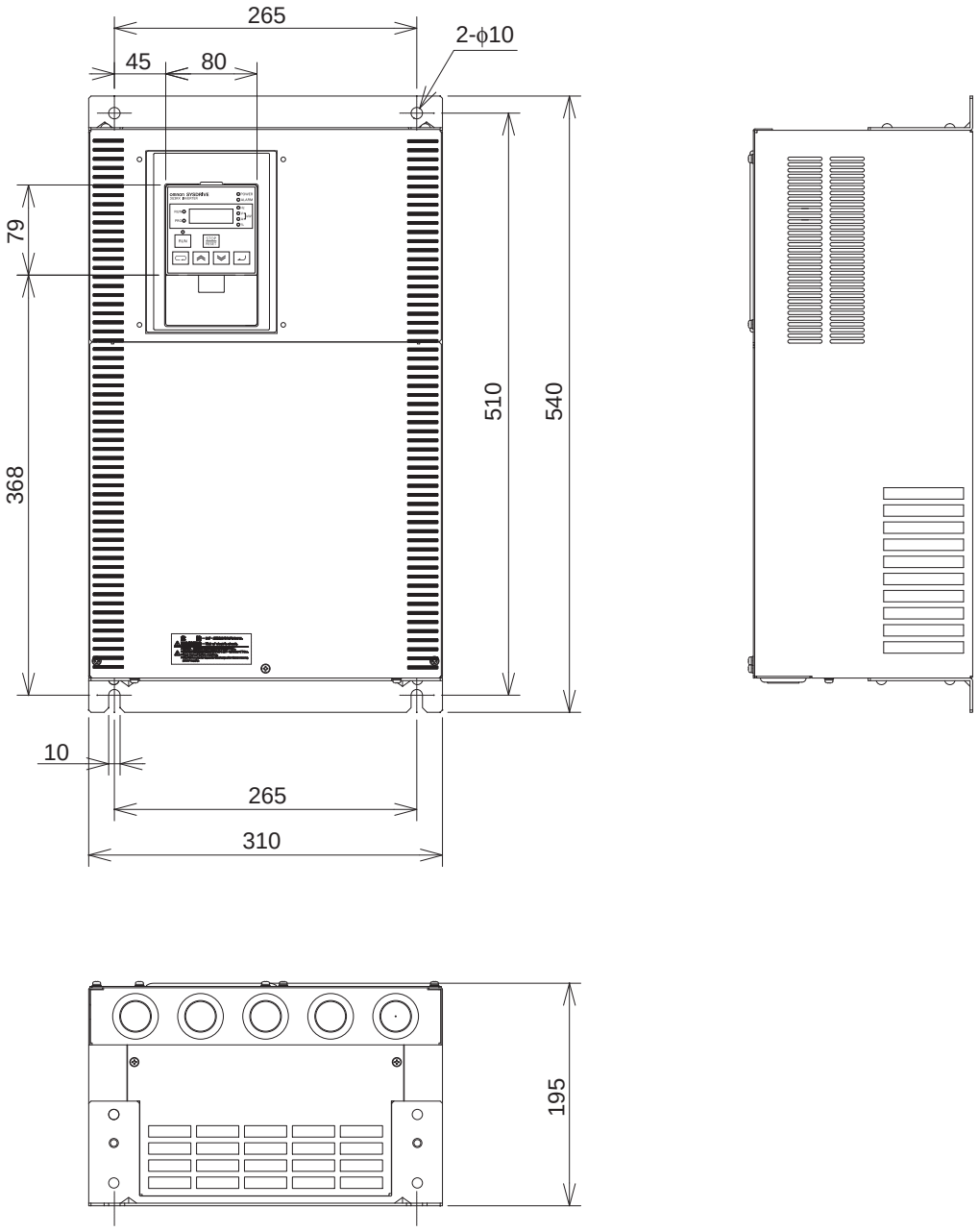

■3G3RX-A2370/A2450
A4370/A4450/A4550

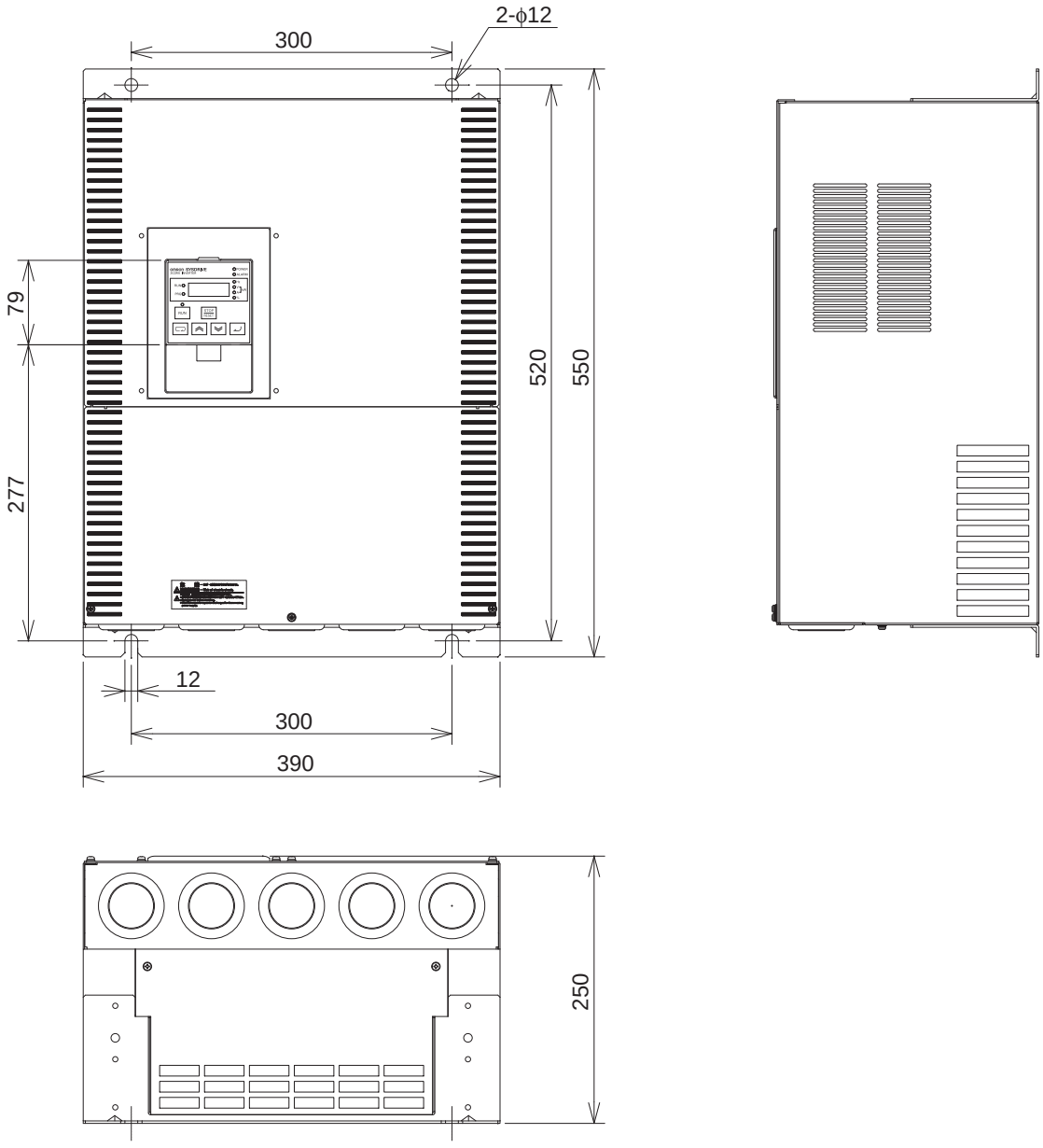

■3G3RX-A2550

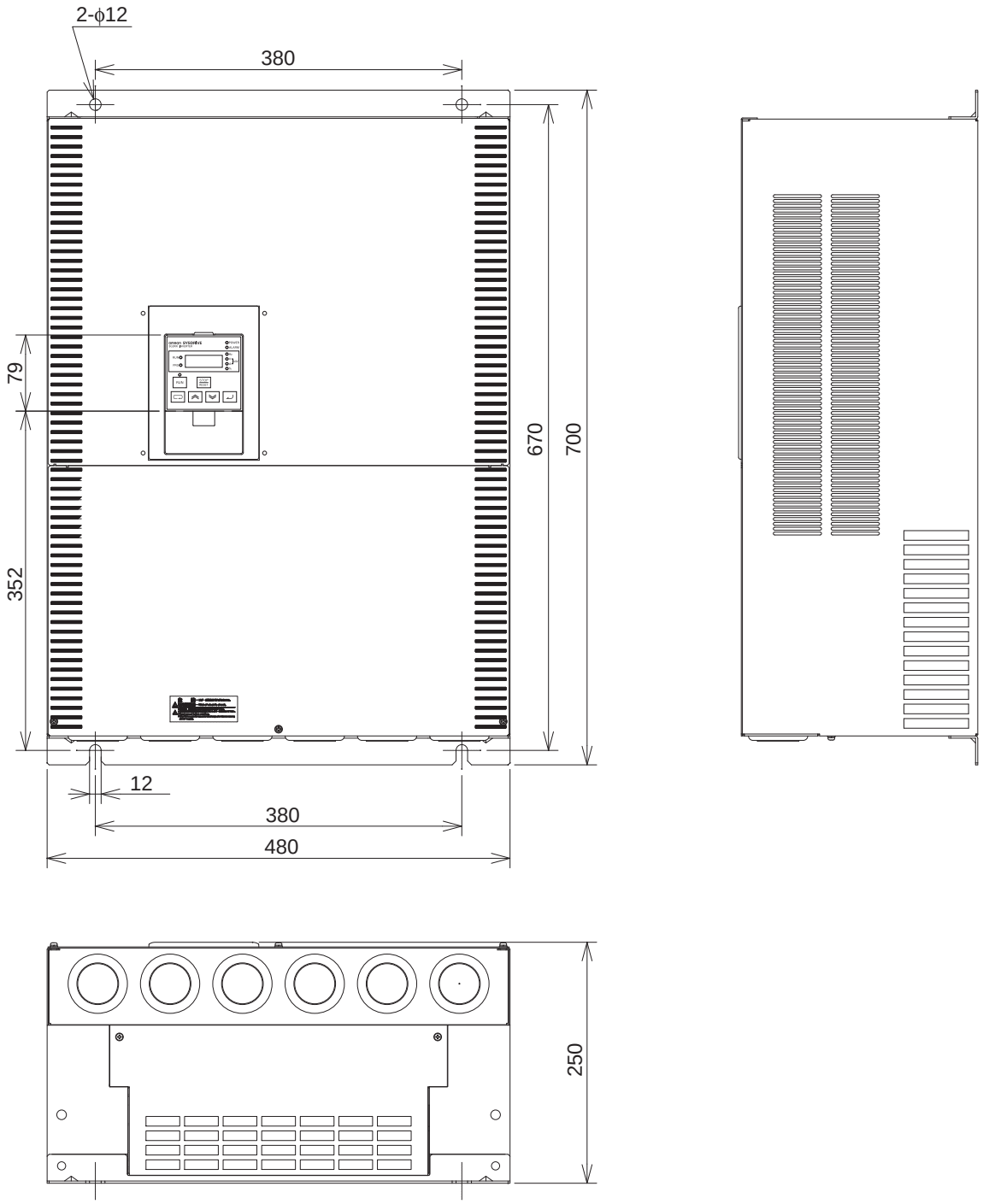

■3G3RX-A4750/A4900

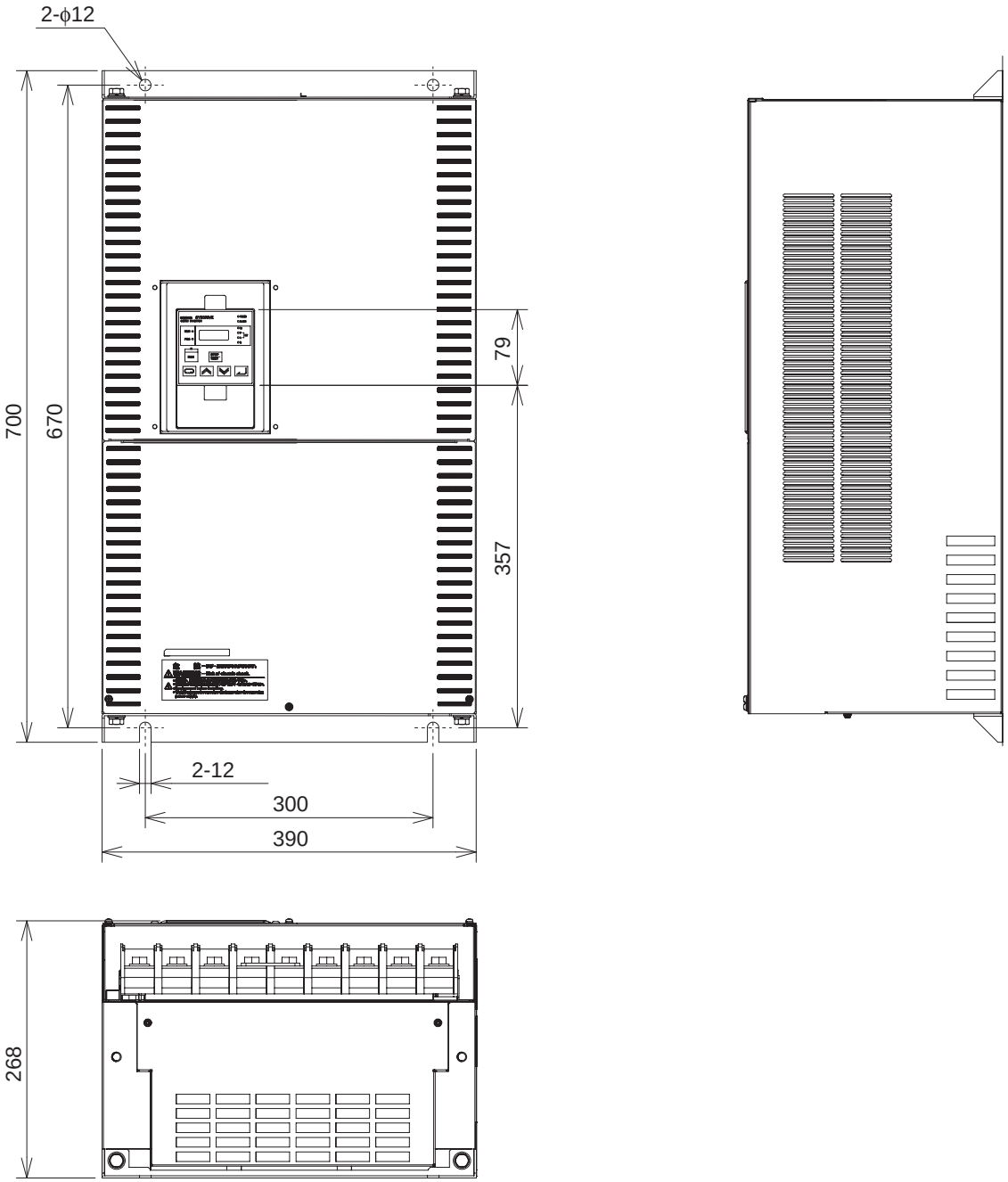

■3G3RX-A411K/A413K

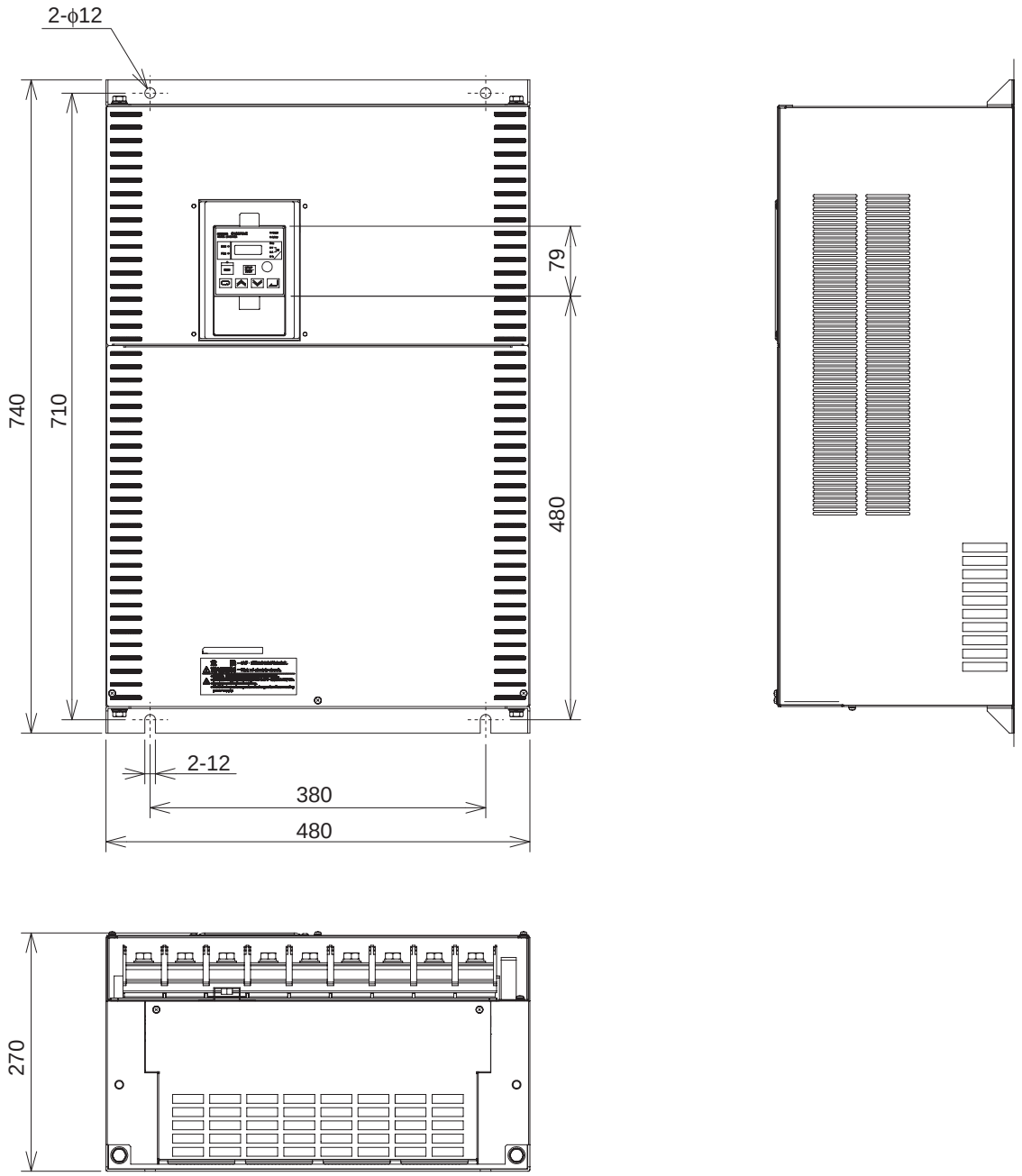

7-3 Options

Regenerative Braking Unit (3G3AX-RBU□□)

■Dimensional Drawing

3G3AX-RBU21/-RBU22/-RBU41

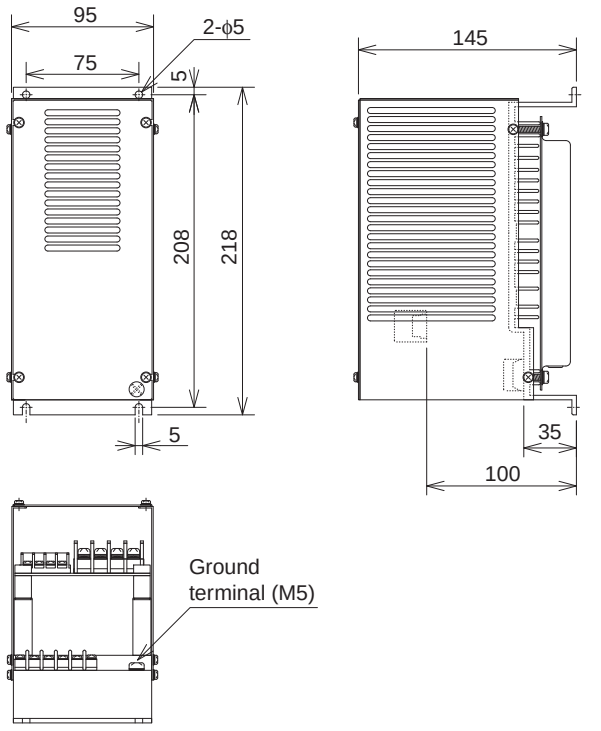

3G3AX-RBU23

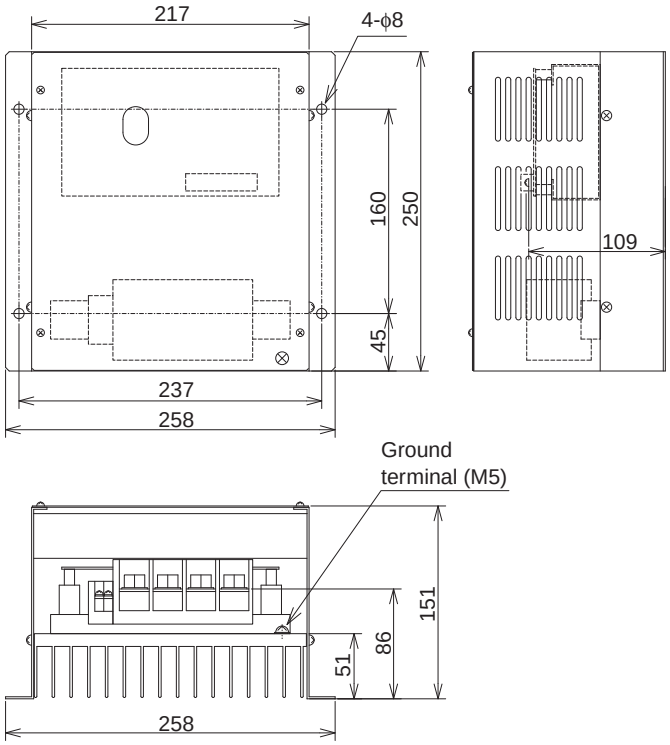

3G3AX-RBU24

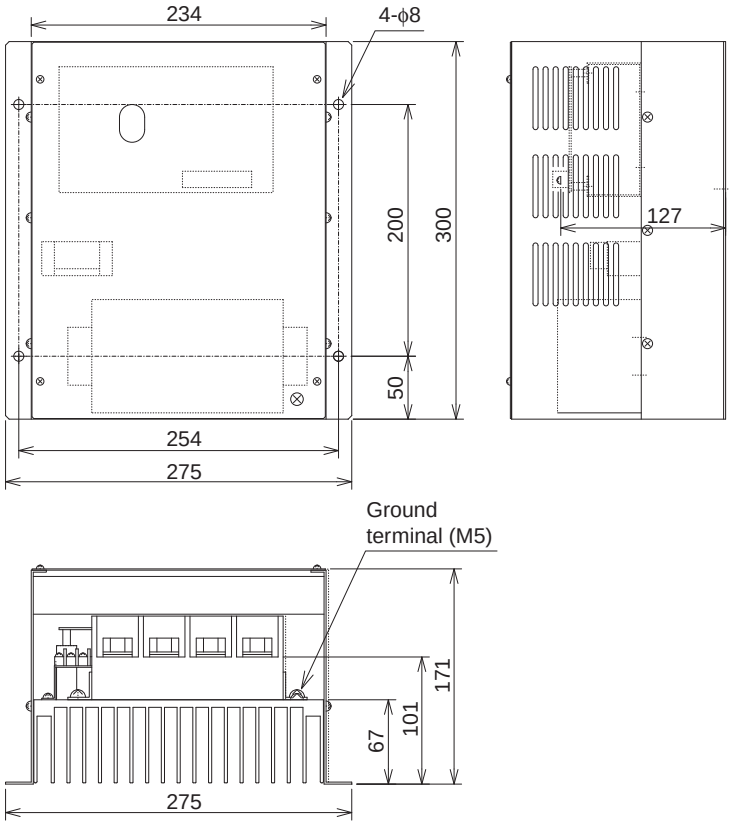

3G3AX-RBU42

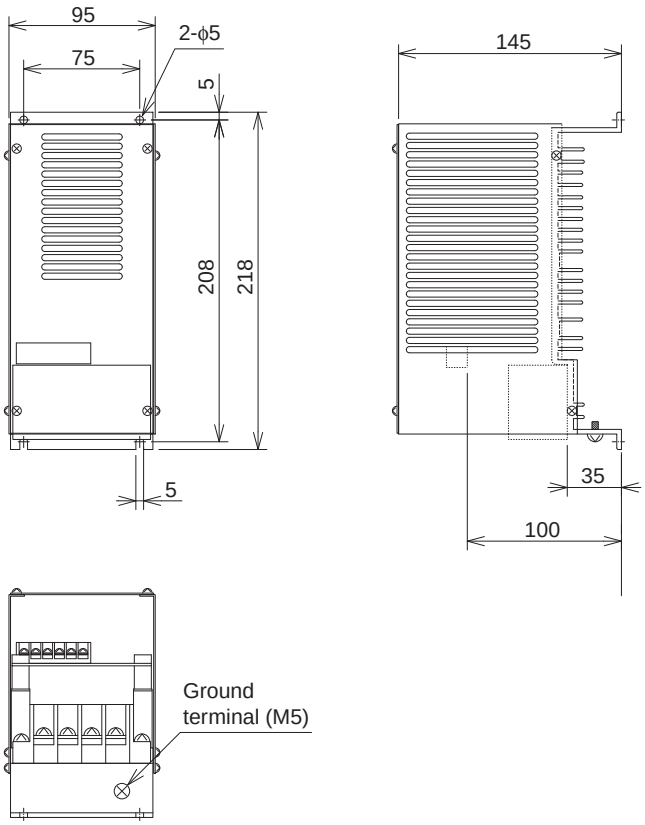

3G3AX-RBU43

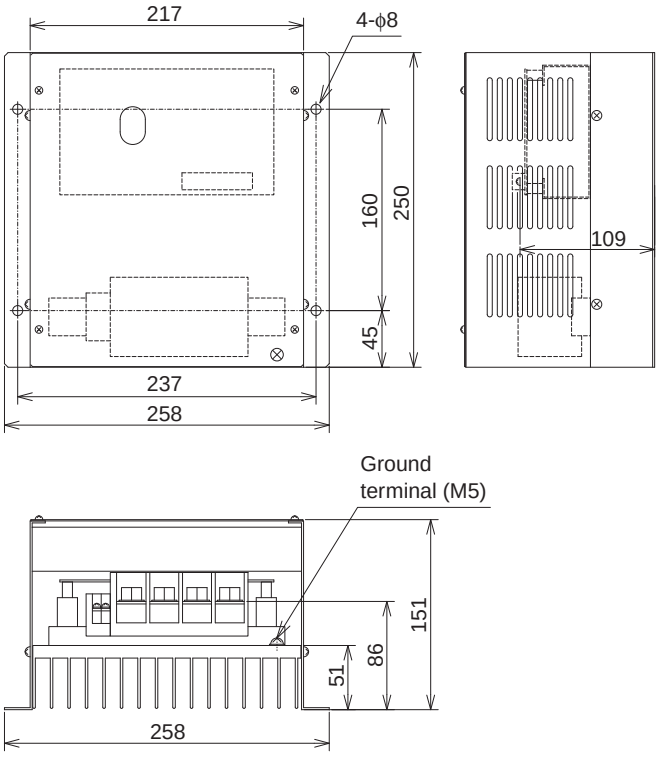

■Specifications

Built-in resistor type (3G3AX-RBU21/-RBU22/-RBU41)

Applicable voltage class		3-phase 200-V class		3-phase 400-V class
Model		3G3AX-RBU21	3G3AX-RBU22	3G3AX-RBU41
Connection resistance		17 Ω min.	17 Ω min.	34 Ω min.
Operating voltage ON/OFF		ON : 362.5 ± 5 V OFF: 355 ± 5 V		ON : 725 ± 5 V OFF: 710 ± 5 V
Operation indication		LED ON (Lit)		
Parallel interlocking operation function		5 units max.		
Built-in resistor	Internal resistance	120 W, 180 Ω	120 W, 20 Ω	120 W, 180 Ω × 2 in series
	Allowable consecutive ON time	10 s max.	0.5 s max.	10 s max.
	Allowable operation cycle	Cycle 1/10 (ON for 10 s, OFF for 90 s)	Cycle 1/80 (ON for 0.5 s, OFF for 40 s)	Cycle 1/10 (ON for 10 s, OFF for 90 s)
	Power consumption	Instantaneous 0.73 kW Short-time rating 120 W	Instantaneous 6.6 kW Short-time rating 120 W	Instantaneous 1.46 kW Short-time rating 240 W
	Built-in resistor overheat protection	• Cooling fin temperature Relay operates at approximately 200°C or higher. Recovers at approximately 170°C or lower. • Rating of contact 250 V AC 200mA (R load) 12 V DC 500mA (R load) 42 V DC 200mA (R load) • Minimum load 1mA (R load)		
Operating environment	Ambient temperature	-10°C to 50°C		
	Ambient storage temperature	-20°C to 65°C (short-time temperature during transport)		
	Humidity	20% to 90% (with no condensation)		
	Vibration	5.9 m/s^2 (0.6G) 10 to 55 Hz		
	Location	At a maximum altitude of 1,000 m; indoors (without corrosive gases or dust)		
Paint color		Munselle 5Y7/1 (cooling fan: aluminum ground color)		

*1 When using a braking resistor (model 3G3AX-RAB/-RBB/-RBC) for a 400-V-class regenerative braking unit, disconnect the built-in resistor and connect two of the same size braking resistors in series.
Damage may occur to a 400-V-class regenerative braking unit if operated with only one braking resistor connected.

*2 Set up using DIP switch.

*3 Built-in resistors are equipped with thermal fuses.
If the alarm is not connected, the fuse may blow to prevent burnout due to overheating.
If the fuse blows, the built-in resistor will need to be replaced.

External resistor type (3G3AX-RBU23/-RBU24/-RBU42/-RBU43)

Applicable voltage class		3-phase 200-V class		3-phase 400-V class	
Model		3G3AX-RBU23	3G3AX-RBU24	3G3AX-RBU42	3G3AX-RBU43
Discharge resistance	Continuous operation	6 Ω min.	4 Ω min.	24 Ω min.	12 Ω min.
	Short-time/ operation Allowable operation cycle/ Continuous ON time	4 Ω min. 1/5 2 min	2 Ω min. 1/5 2 min	10 Ω min. 1/10 10 s	6 Ω min. 1/5 2 min
Operating voltage ON/ OFF		ON: 362.5 ± 5 V OFF: 355 ± 5 V		ON: 725 ± 5 V OFF: 710 ± 5 V	
Operation indication		LED ON (Lit)			
Maximum number of units operating in parallel		2 units max.			
Protective functions	Internal power module overheat protection	Built-in relay specifications Cooling fin temperature Relay operates at approximately 100°C or higher. • Rating of contact: 240 V AC 3 A (R load) 36 V DC 2 A (R load) • Minimum load: 5 V DC 50 mA (R load)			
Operating environment	Ambient temperature	-10°C to 50°C			
	Ambient storage temperature	-20°C to 65°C (short-time temperature during transport)			
	Humidity	20% to 90% (with no condensation)			
	Vibration	4.9 m/s^2 (0.5G) 10 to 55 Hz			
	Location	At a maximum altitude of 1,000 m; indoors (without corrosive gases or dust)			
Paint color		Munselle 5Y7/1 (cooling fan: aluminum ground color)			

*1 When using a braking resistor (model 3G3AX-RAB/-RBB/-RBC) for a 400-V-class regenerative braking unit, connect two of the same size braking resistors in series.
Damage may occur to a 400-V-class regenerative braking unit if operated with only one braking resistor connected.

*2 Set up using DIP switch.

Braking Resistor (3G3AX-RBA/-RBB/-RBC□□□)

■Dimensional Drawing

3G3AX-RBA□□□□

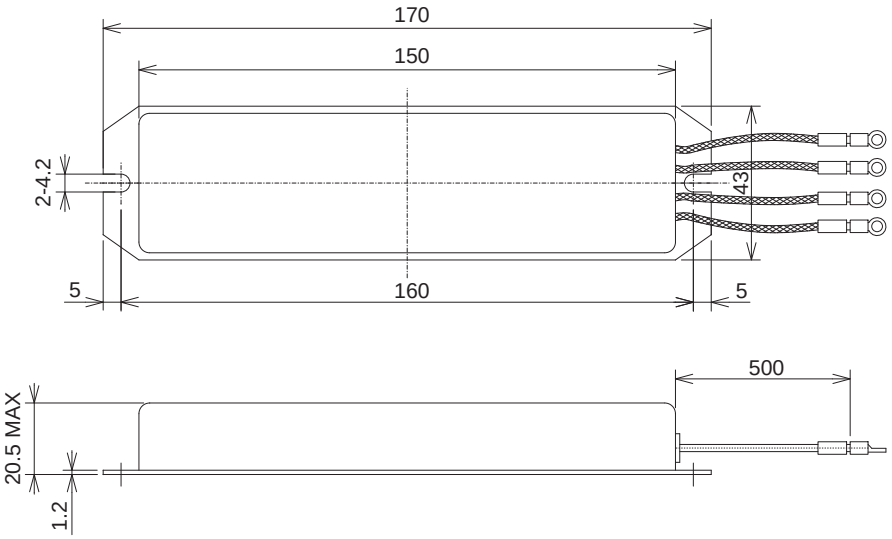

3G3AX-RBB□□□□

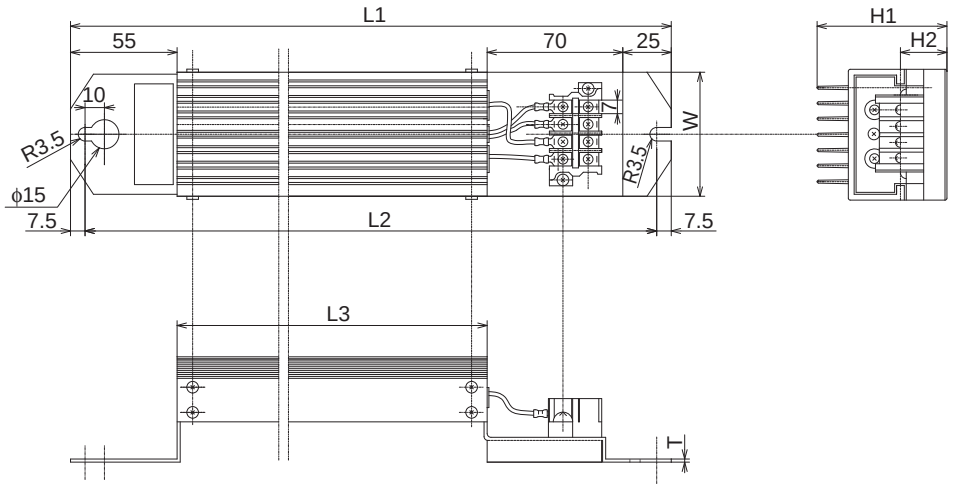

Model	Rated capacity (W)	Resistance (Ω)	Dimensions (mm)							Weight (kg)
			L1	L2	L3	H1	H2	W	T	
3G3AX-RBB2001	200	180	310	295	160	67	12	64	1.6	0.97
3G3AX-RBB2002	200	100	310	295	160	67	12	64	1.6	0.97
3G3AX-RBB3001	300	50	470	455	320	67	12	64	1.6	1.68
3G3AX-RBB4001	400	35	435	422	300	94	15	76	2	2.85

3G3AX-RBC4001

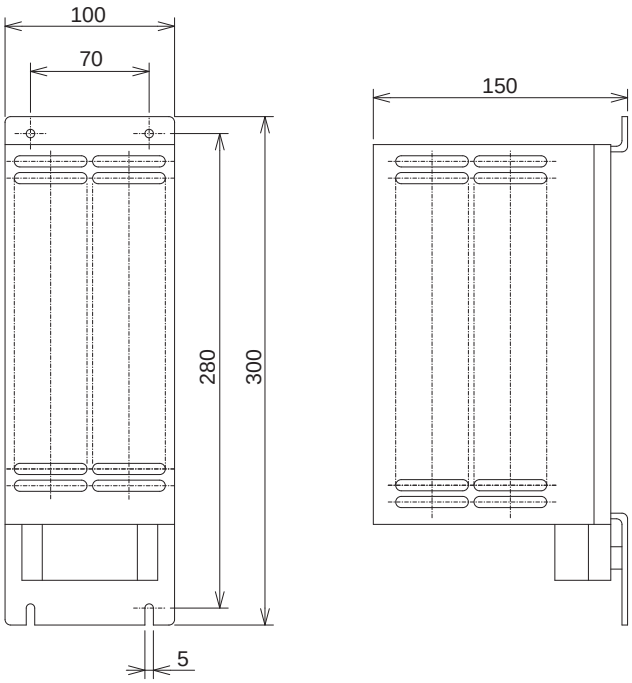

3G3AX-RBC6001

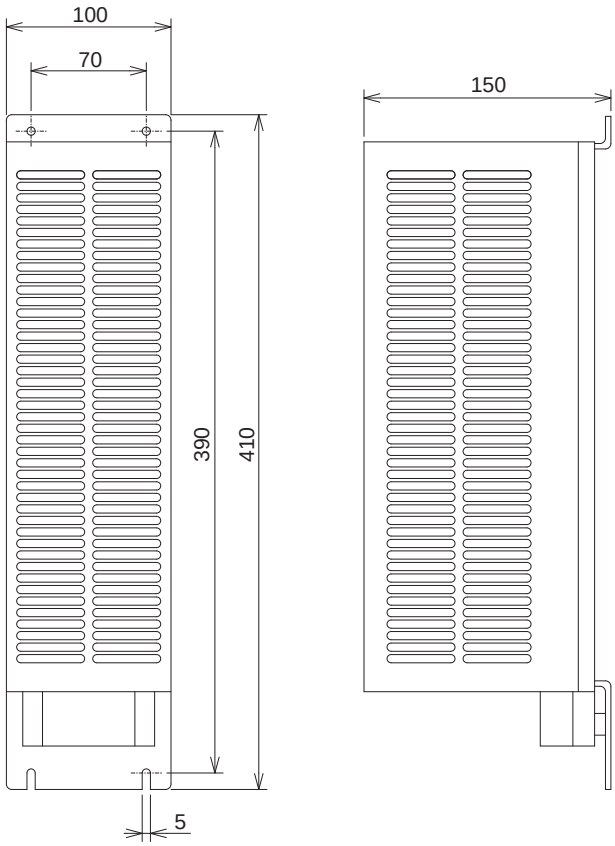

3G3AX-RBC12001

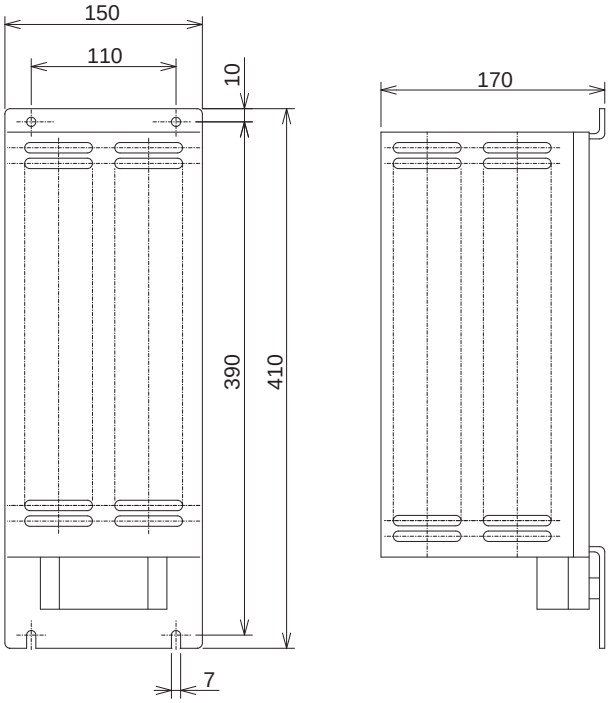

■Specifications

		Compact type (3G3AX-RBA□□□□)				Standard type (3G3AX-RBB□□□□)				Medium capacity type (3G3AX-RBC□□□□)		
Model		1201	1202	1203	1204	2001	2002	3001	4001	4001	6001	12001
Resistance	Capacity	120 W				200 W		300 W	400 W	400 W	600 W	1200 W
Resistance	Resistance (Ω)	180	100	50	35	180	100	50	35	50	35	17
Allowable braking frequency (%)		5	2.5	1.5	1.0	10	7.5	7.5	7.5	10		
Allowable continuous braking time (s)		20	12	5	3	30			20	10		
Weight (kg)		0.27				0.97		1.68	2.85	2.5	3.6	6.5
Fault detection function		Built-in thermal (Contact capacity: 240 V AC 2 A max. Minimum current: 5 mA, Normally ON (NC contact) Built-in temperature fuse (recovery impossible)								Built-in temperature relay, Normally ON (NC contact) Contact capacity: 240 V AC 3 A (R load), 0.2 A (L load), 36 V DC 2 A (R load)		
General specifications	Ambient temperature	-10°C to 50°C										
	Humidity	20% to 90% (RH) with no condensation										
	Vibration	5.9 m/s (0.6 G) 10 to 55 Hz Complies with JISC0911										
	Location	At a maximum altitude of 1,000 m; indoors (without corrosive gases or dust)										
	Cooling method	Self-cooling										

■Simplified Selection Table for Regenerative Braking Unit and Braking Resistor

(1) Inverter specifications (choose voltage, capacity, and model)
The content noted in the table assumes the case of combining one Inverter and one motor of the same capacity.

(2) Select the %ED.
Use the %ED that is equivalent to or lower than the value shown.

(3) This shows the model and number of regenerative braking units and braking resistors.

(4) This provides a summary of the connection configuration of the regenerative braking unit and braking resistor.
Refer to pages 7-22 to 7-28.

(5) The specified conditions contain restrictions. Make sure there are not any issues

(1) Inverter			(2) Usage conditions	(3) Regenerative braking unit		(3) Braking resistor		(4) Connection	(5) Restrictions
Voltage	Max. applicable motor capacity (kW)	Model	%ED (%)	Model	Number of units	Model	Number of units		Allowable continuous braking time (s)
200-V Class	0.4	3G3RX-A2004	3.0%	Built-in braking resistor circuit	—	3G3AX-RBA1201	1	1	20
			10.0%	Built-in braking resistor circuit	—	3G3AX-RBB2001	1	1	30
	0.75	3G3RX-A2007	3.0%	Built-in braking resistor circuit	—	3G3AX-RBA1201	1	1	20
			10.0%	Built-in braking resistor circuit	—	3G3AX-RBB2001	1	1	30
	1.5	3G3RX-A2015	3.0%	Built-in braking resistor circuit	—	3G3AX-RBA1202	1	1	20
			10.0%	Built-in braking resistor circuit	—	3G3AX-RBC4001	1	1	10
	2.2	3G3RX-A2022	3.0%	Built-in braking resistor circuit	—	3G3AX-RBB3001	1	1	30
			10.0%	Built-in braking resistor circuit	—	3G3AX-RBC4001	1	1	10
	3.7	3G3RX-A2037	3.0%	Built-in braking resistor circuit	—	3G3AX-RBB4001	1	1	20
			10.0%	Built-in braking resistor circuit	—	3G3AX-RBC6001	1	1	10
	5.5	3G3RX-A2055	3.0%	Built-in braking resistor circuit	—	3G3AX-RBB3001	2	3	30
			10.0%	Built-in braking resistor circuit	—	3G3AX-RBC4001	2	3	10
	7.5	3G3RX-A2075	3.0%	Built-in braking resistor circuit	—	3G3AX-RBB4001	2	3	20
			10.0%	Built-in braking resistor circuit	—	3G3AX-RBC6001	2	3	10

(1) Inverter			(2) Usage conditions	(3) Regenerative braking unit		(3) Braking resistor		(4) Connection	(5) Restrictions
Voltage	Max. applicable motor capacity (kW)	Model	%ED (%)	Model	Number of units	Model	Number of units		Allowable continuous braking time (s)
200-V Class	11	3G3RX-A2110	3.0%	Built-in braking resistor circuit	—	3G3AX-RBB4001	3	5	20
			10.0%	Built-in braking resistor circuit	—	3G3AX-RBC6001	3	5	10
	15	3G3RX-A2150	3.0%	Built-in braking resistor circuit	—	3G3AX-RBC12001	2	3	10
			10.0%	Built-in braking resistor circuit	—	3G3AX-RBC12001	2	3	10
	18.5	3G3RX-A2185	3.0%	3G3AX-RBU24	1	3G3AX-RBC12001	3	7	10
			10.0%	3G3AX-RBU24	1	3G3AX-RBC12001	3	7	10
	22	3G3RX-A2220	3.0%	3G3AX-RBU24	1	3G3AX-RBC12001	3	7	10
			10.0%	3G3AX-RBU24	1	3G3AX-RBC12001	3	7	10
	30	3G3RX-A2300	3.0%	3G3AX-RBU24	1	3G3AX-RBC12001	5	11	10
			10.0%	3G3AX-RBU24	1	3G3AX-RBC12001	5	11	10
	37	3G3RX-A2370	3.0%	3G3AX-RBU24	1	3G3AX-RBC12001	5	11	10
			10.0%	3G3AX-RBU24	1	3G3AX-RBC12001	5	11	10
	45	3G3RX-A2450	3.0%	3G3AX-RBU24	1	3G3AX-RBC12001	6	12	10
			10.0%	3G3AX-RBU24	1	3G3AX-RBC12001	6	12	10
	55	3G3RX-A2550	3.0%	3G3AX-RBU24	1	3G3AX-RBC12001	7	13	10
			10.0%	3G3AX-RBU24	1	3G3AX-RBC12001	7	13	10

(1) Inverter			(2) Usage conditions	(3) Regenerative braking unit		(3) Braking resistor		(4) Connection	(5) Restrictions
Voltage	Max. applicable motor capacity (kW)	Model	%ED (%)	Model	Number of units	Model	Number of units		Allowable continuous braking time (s)
400-V Class	0.4	3G3RX-A4004	3.0%	Built-in braking resistor circuit	—	3G3AX-RBA1201	2	3	20
			10.0%	Built-in braking resistor circuit	—	3G3AX-RBB2001	2	3	30
	0.75	3G3RX-A4007	3.0%	Built-in braking resistor circuit	—	3G3AX-RBA1201	2	3	20
			10.0%	Built-in braking resistor circuit	—	3G3AX-RBB2001	2	3	30
	1.5	3G3RX-A4015	3.0%	Built-in braking resistor circuit	—	3G3AX-RBA1201	2	3	20
			10.0%	Built-in braking resistor circuit	—	3G3AX-RBB2001	2	3	30
	2.2	3G3RX-A4022	3.0%	Built-in braking resistor circuit	—	3G3AX-RBA1202	2	3	12
			10.0%	Built-in braking resistor circuit	—	3G3AX-RBC4001	2	3	10
	3.7	3G3RX-A4037	3.0%	Built-in braking resistor circuit	—	3G3AX-RBB3001	2	3	30
			10.0%	Built-in braking resistor circuit	—	3G3AX-RBC4001	2	3	10
	5.5	3G3RX-A4055	3.0%	Built-in braking resistor circuit	—	3G3AX-RBB3001	2	3	30
			10.0%	Built-in braking resistor circuit	—	3G3AX-RBC4001	2	3	10
	7.5	3G3RX-A4075	3.0%	Built-in braking resistor circuit	—	3G3AX-RBB4001	2	3	20
			10.0%	Built-in braking resistor circuit	—	3G3AX-RBC6001	2	3	10
	11	3G3RX-A4110	3.0%	Built-in braking resistor circuit	—	3G3AX-RBB3001	4	5	30
			10.0%	Built-in braking resistor circuit	—	3G3AX-RBC4001	4	5	10
	15	3G3RX-A4150	3.0%	Built-in braking resistor circuit	—	3G3AX-RBB4001	4	5	20
			10.0%	Built-in braking resistor circuit	—	3G3AX-RBC6001	4	5	10
	18.5	3G3RX-A4185	3.0%	Built-in braking resistor circuit	—	3G3AX-RBC12001	6	6	10
			10.0%	Built-in braking resistor circuit	—	3G3AX-RBC12001	6	6	10
	22	3G3RX-A4220	3.0%	Built-in braking resistor circuit	—	3G3AX-RBC12001	6	6	10
			10.0%	Built-in braking resistor circuit	—	3G3AX-RBC12001	6	6	10

(1) Inverter			(2) Usage conditions	(3) Regenerative braking unit		(3) Braking resistor		(4) Connection	(5) Restrictions
Voltage	Max. applicable motor capacity (kW)	Model	%ED (%)	Model	Number of units	Model	Number of units		Allowable continuous braking time (s)
400-V Class	30	3G3RX-A2300	3.0%	3G3AX-RBU42	1	3G3AX-RBC12001	4	8	10
			10.0%	3G3AX-RBU42	1	3G3AX-RBC12001	4	8	10
	37	3G3RX-A4370	3.0%	3G3AX-RBU43	1	3G3AX-RBC12001	6	9	10
			10.0%	3G3AX-RBU43	1	3G3AX-RBC12001	6	9	10
	45	3G3RX-A4450	3.0%	3G3AX-RBU43	1	3G3AX-RBC12001	6	9	10
			10.0%	3G3AX-RBU43	1	3G3AX-RBC12001	6	9	10
	55	3G3RX-A4550	3.0%	3G3AX-RBU43	1	3G3AX-RBC12001	8	10	10
			10.0%	3G3AX-RBU43	1	3G3AX-RBC12001	8	10	10

* Calculated using a braking torque of approximately 100%.
* Calculated based on using a standard 4-pole motor.
* The simplified selection table above cannot be used in cases where a 10% ED is exceeded, in vertical applications, or where a very large braking torque is required.
* Consult us concerning models with a capacity of 75 kW or higher.

TYPE		
1	Resistor only One units	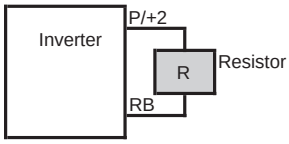
2	Resistor only Two units in parallel	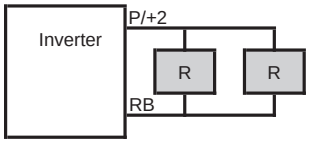
3	Resistor only Two units in series	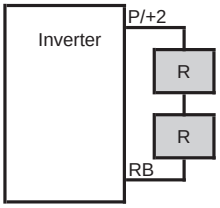
4	Resistor only Three units in parallel	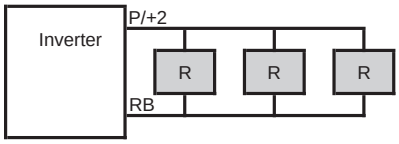
5	Resistor only Two parallel units connected in series to two other parallel units	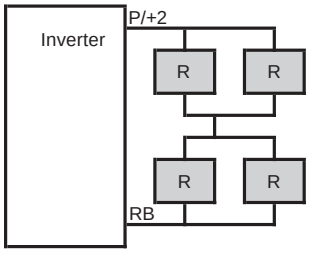
6	Three resistors in series Two units in parallel	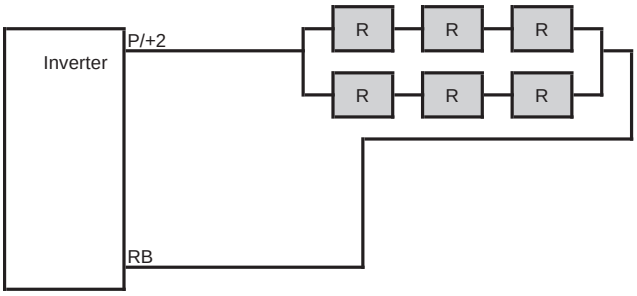

TYPE		
7	One braking unit Three resistors in parallel	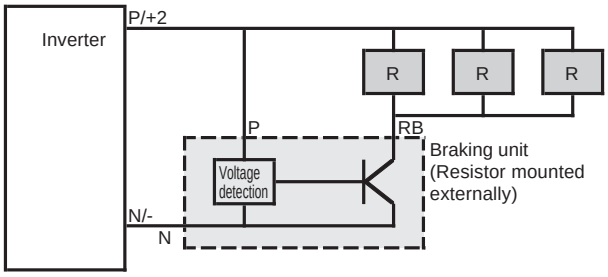
8	One braking unit Two resistors in parallel connected in series to two other parallel units	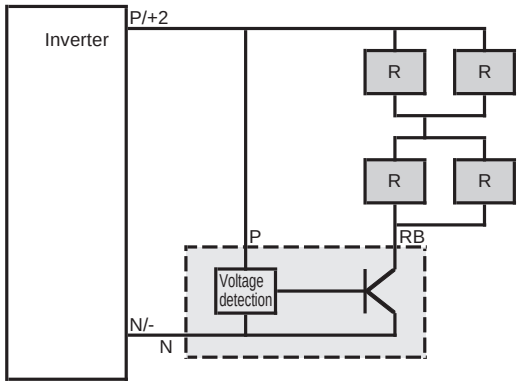
9	One braking unit Three resistors in parallel connected in series to two other parallel units	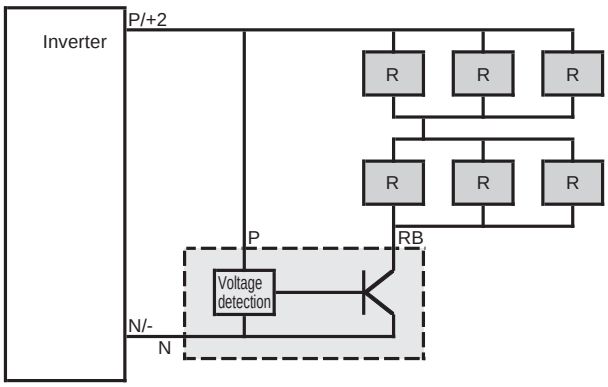
10	One braking unit Four resistors in parallel connected in series to two other parallel units	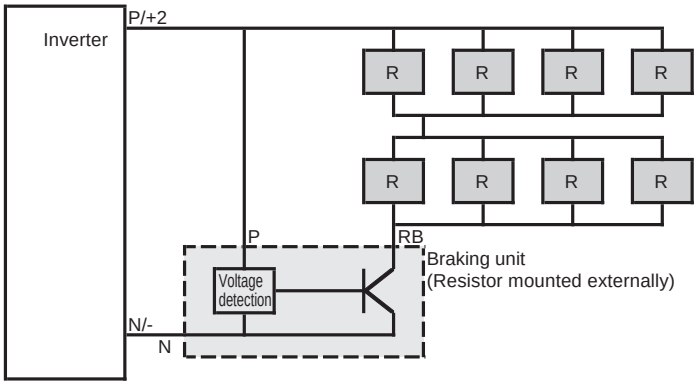

TYPE		
11	One braking unit Five resistors in parallel	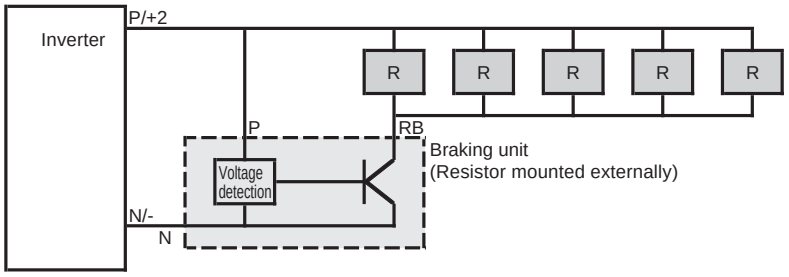
12	One braking unit Six resistors in parallel	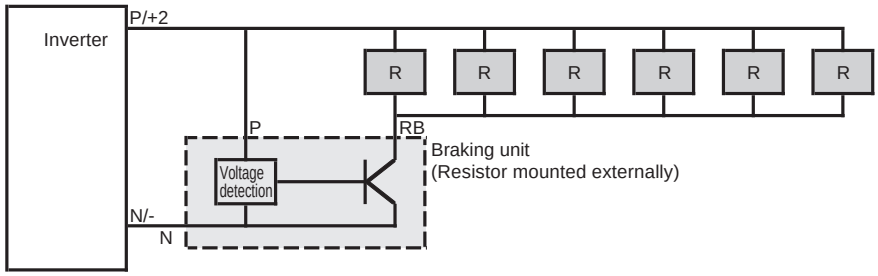
13	One braking unit Seven resistors in parallel	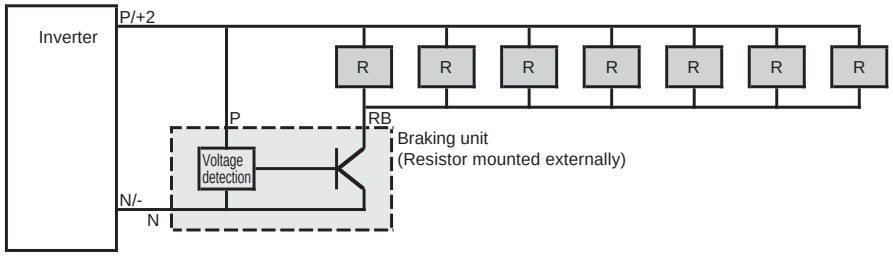

DC Reactor (3G3AX-DL□□□□)

■Dimensional Drawing

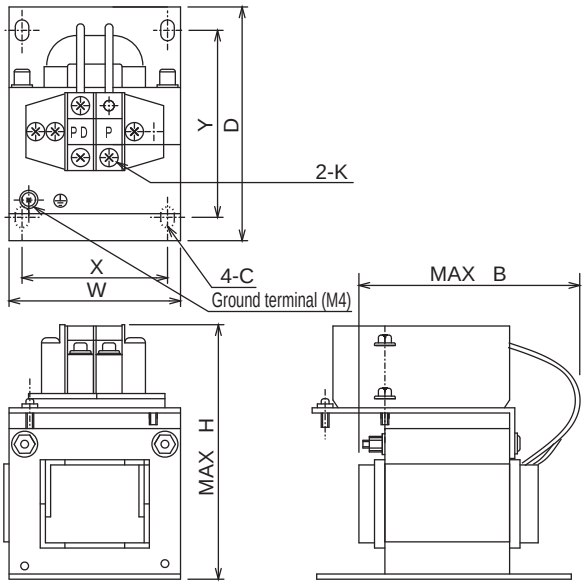

Figure 1

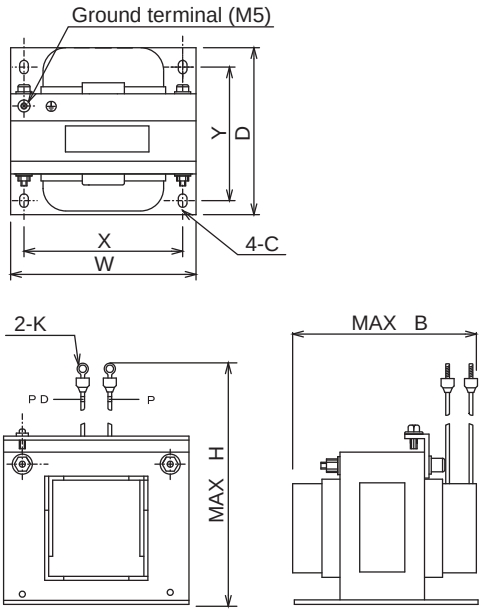

Figure 2

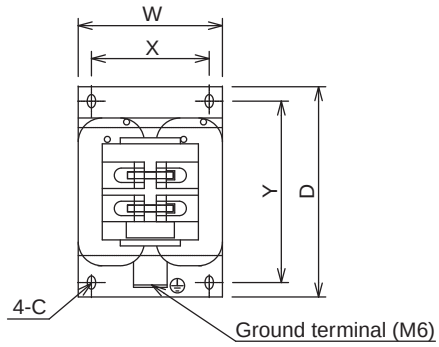

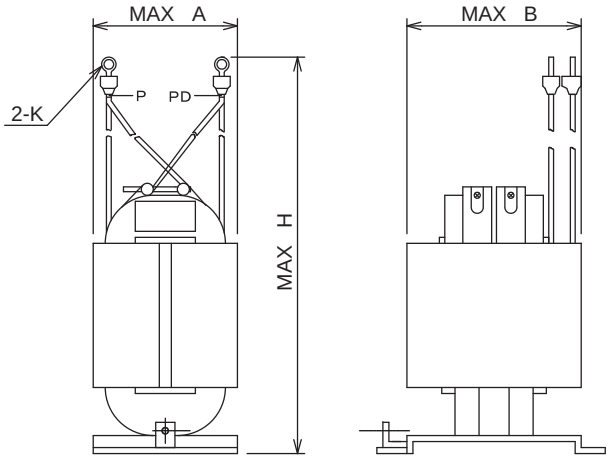

Figure 3

■Specifications

Inverter input power supply	Model	Figure No.	Applicable Inverter capacity (kw)	Dimensions (mm) Bmax: coil dimensions									Weight (kg)	Standard applicable wire
				W	D	H	A	B	X	Y	C	K		
3/1-phase 200 V AC	3G3AX-DL2002	Fig. 1	0.2	66	90	98	—	85	56	72	5.2 × 8	M4	0.8	1.25 mm^2 min.
	3G3AX-DL2004		0.4	66	90	98	—	95	56	72	5.2 × 8	M4	1.0	1.25 mm^2 min.
	3G3AX-DL2007		0.75	66	90	98	—	105	56	72	5.2 × 8	M4	1.3	2 mm^2 min.
	3G3AX-DL2015		1.5	66	90	98	—	115	56	72	5.2 × 8	M4	1.6	2 mm^2 min.
	3G3AX-DL2022		2.2	86	100	116	—	105	71	80	6 × 9	M4	2.1	2 mm^2 min.
	3G3AX-DL2037		3.7	86	100	118	—	120	71	80	6 × 9	M4	2.6	3.5 mm^2 min.
	3G3AX-DL2055	Fig. 2	5..5	111	100	210	—	110	95	80	7 × 11	M5	3.6	8 mm^2 min.
	3G3AX-DL2075		7.5	111	100	212	—	120	95	80	7 × 11	M6	3.9	14 mm^2 min.
	3G3AX-DL2110		11	146	120	252	—	110	124	96	7 × 11	M6	6.5	22 mm^2 min.
	3G3AX-DL2150		15	146	120	256	—	120	124	96	7 × 11	M8	7.0	38 mm^2 min.
	3G3AX-DL2220	Fig. 3	18.5, 22	120	175	356	140	145	98	151	7 × 11	M8	9.0	60 mm^2 min.
	3G3AX-DL2300		30	120	175	386	155	150	98	151	7 × 11	M8	13.0	38 mm^2 × 2 min.
	3G3AX-DL2370		37	120	175	390	155	150	98	151	7 × 11	M10	13.5	38 mm^2 × 2 min.
	3G3AX-DL2450		45	160	190	420	180	150	120	168	7 × 11	M10	19.0	60 mm^2 × 2 min.
	3G3AX-DL2550		55	160	190	424	180	180	120	168	7 × 11	M12	24.0	80 mm^2 × 2 min.
3-phase 400 V AC	3G3AX-DL4004	Fig. 1	0.4	66	90	98	—	85	56	72	5.2 × 8	M4	0.8	1.25 mm^2 min.
	3G3AX-DL4007		0.75	66	90	98	—	95	56	72	5.2 × 8	M4	1.1	1.25 mm^2 min.
	3G3AX-DL4015		1.5	66	90	98	—	115	56	72	5.2 × 8	M4	1.6	2 mm^2 min.
	3G3AX-DL4022		2.2	86	100	116	—	105	71	80	6 × 9	M4	2.1	2 mm^2 min.
	3G3AX-DL4037		3.7	86	100	116	—	120	71	80	6 × 9	M4	2.6	2 mm^2 min.
	3G3AX-DL4055		5.5	111	100	138	—	110	95	80	7 × 11	M4	3.6	3.5 mm^2 min.
	3G3AX-DL4075		7.5	111	100	138	—	115	95	80	7 × 11	M4	3.9	3.5 mm^2 min.
	3G3AX-DL4110	Fig. 2	11	146	120	250	—	105	124	96	7 × 11	M5	5.2	5.5 mm^2 min.
	3G3AX-DL4150		15	146	120	252	—	120	124	96	7 × 11	M6	7.0	14 mm^2 min.
	3G3AX-DL4220	Fig.3	18.5, 22	120	175	352	140	145	98	151	7 × 11	M6	9.5	22 mm^2 min.
	3G3AX-DL4300		30	120	175	356	140	145	98	151	7 × 11	M8	9.5	30 mm^2 min.
	3G3AX-DL4370		37	120	175	386	155	150	98	151	7 × 11	M8	13.5	38 mm^2 min.
	3G3AX-DL4450		45	160	190	416	180	145	120	168	7 × 11	M8	16.5	60 mm^2 min.
	3G3AX-DL4550		55	160	190	416	190	170	120	168	7 × 11	M8	23.0	38 mm^2 × 2 min.

■Operating Environment

Ambient temperature	-10°C to 50°C
Humidity	20% to 90% RH (with no condensation)
Vibration	15 kW max. 5.9 m/s^2 max. (0.6G) 10 to 55 Hz 22 kW min. 2.0 m/s^2 max. (0.2G) 10 to 55 Hz
Location	At a maximum altitude of 1,000 m; indoors (without corrosive gases or dust)

Input Noise Filter (3G3AX-NFI)

■Dimensional Drawing

3G3AX-NFI21/-NFI22

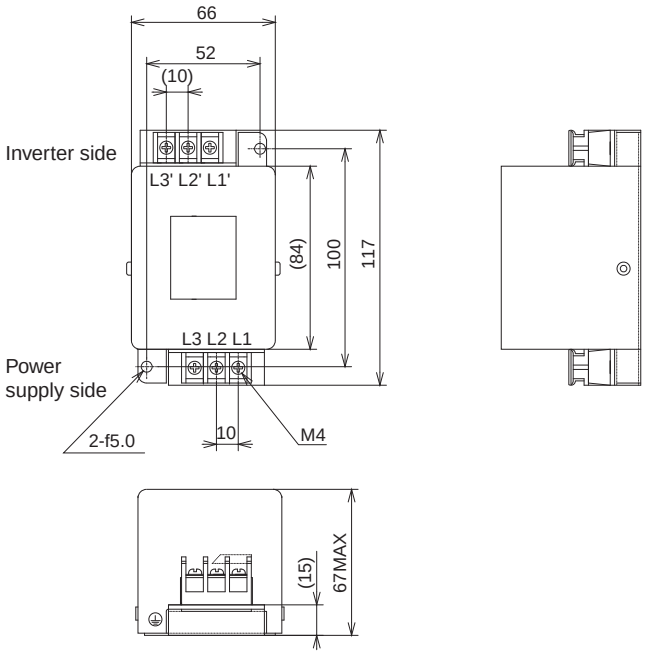

3G3AX-NFI23/-NFI24/-NFI41/
-NFI42/-NFI43/-NFI44

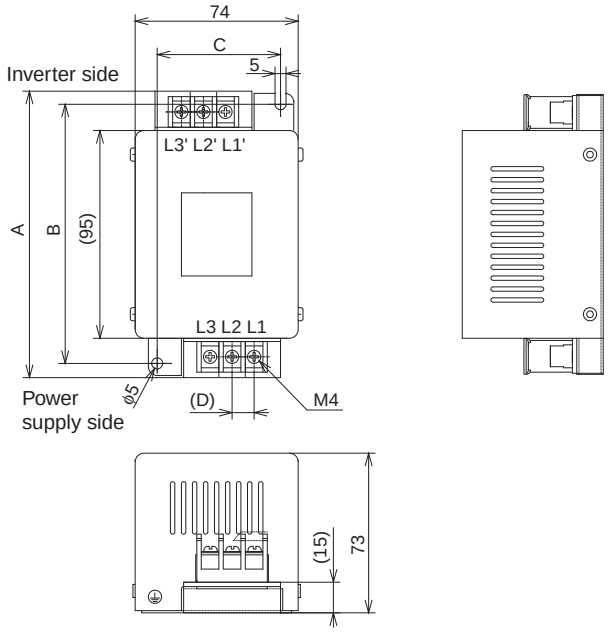

Model	Dimensions (Unit: mm)			
	A	B	C	D
3G3AX-NFI23	128	118	56	10
3G3AX-NFI24	144	130	56	11
3G3AX-NFI41	144	130	56	11
3G3AX-NFI42	144	130	56	11
3G3AX-NFI43	144	130	56	11
3G3AX-NFI44	144	130	56	11

3G3AX-NFI25/-NFI26/-NFI45
-NFI46/-NFI47

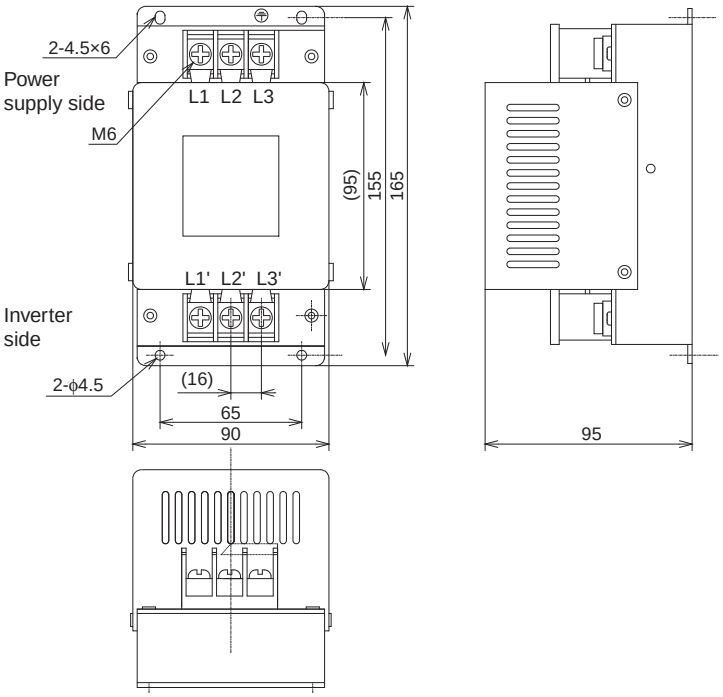

3G3AX-NFI27/-NFI28/-NFI29
-NFI48/-NFI49/-NFI4A

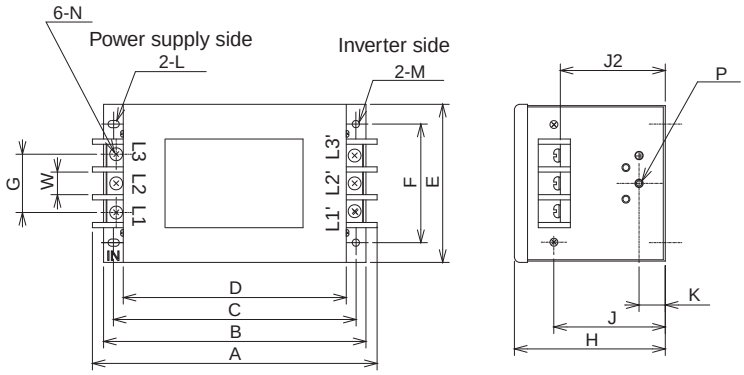

Model	Dimensions (Unit: mm)															
	A	B	C	D	E	F	G	H	J	J2	K	L	M	N	P	W
3G3AX-NFI27	217	200	185	170	120	90	44	115	85	82	20	R2.75 Length 7	ϕ5.5	M6	M4	17
3G3AX-NFI28	254	230	215	200	150	120	57	115	80	75	30	R3.75 Length 8	ϕ6.5	M8	M6	23
3G3AX-NFI29	314	300	280	260	200	170	57	130	90	85	35	R3.75 Length 8	ϕ6.5	M8	M6	23
3G3AX-NFI48	217	200	185	170	120	90	44	115	85	82	20	R2.75 Length 7	ϕ5.5	M6	M4	17
3G3AX-NFI49	254	230	215	200	150	120	57	115	80	75	30	R3.75 Length 8	ϕ6.5	M8	M6	23
3G3AX-NFI4A	314	300	280	260	200	170	57	130	90	85	35	R3.75 Length 8	ϕ6.5	M8	M6	23

3G3AX-NFI2A/-NFI2B/-NFI2C

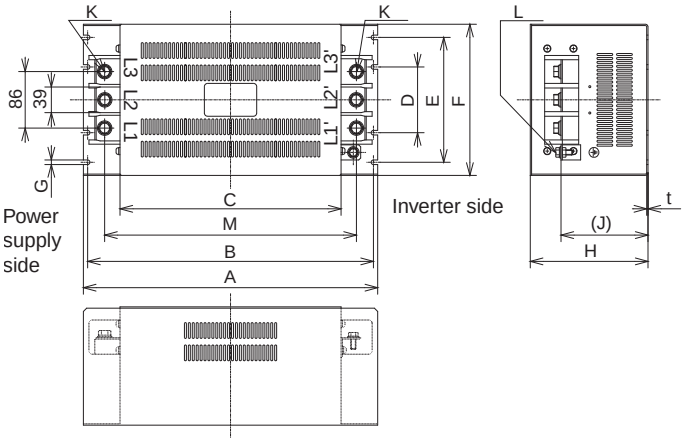

Model	Dimensions (Unit: mm)												
	A	B	C	D	E	F	G	H	J	K	L	M	t
3G3AX-NFI2A	450	430	338	100	190	230	7	180	(133)	M10	M8	385	1.0
3G3AX-NFI2B													
3G3AX-NFI2C	500	475	400	—	160	200	12	180	(133)	M10	M8	445	1.2

■Specifications (3G3AX-NF1)

Power supply	Model	Applicable Inverter capacity (kw)	Rated input current In (A) at an ambient temperature of 50°C	Power loss (W)	Leakage current (mA/ phase) at 60 Hz
3-phase 250 V +10% Max.	3G3AX-NFI21	0.2 to 0.75	3 × 6A	3	< 1.5 (250V)
	3G3AX-NFI22	1.5	3 × 10A	4	< 1.5 (250V)
	3G3AX-NFI23	2.2, 3.7	3 × 20A	6	< 1.5 (250V)
	3G3AX-NFI24	5.5	3 × 30 A	9	< 1.5 (250 V)
	3G3AX-NFI25	7.5	3 × 40 A	12	< 1.5 (250 V)
	3G3AX-NFI26	11	3 × 60 A	17	< 1.5 (250 V)
	3G3AX-NFI27	15	3 × 80 A	21	< 1.5 (250 V)
	3G3AX-NFI28	18.5	3 × 100 A	23	< 1.5 (250 V)
	3G3AX-NFI29	22, 30	3 × 150 A	45	< 1.5 (250 V)
	3G3AX-NFI2A	37	3 × 200 A	50	< 1.5 (250 V)
	3G3AX-NFI2B	45	3 × 250 A	68	< 1.5 (250 V)
	3G3AX-NFI2C	55	3 × 300 A	56	< 1.5 (250 V)
3-phase 480 V +10% Max.	3G3AX-NFI41	0.4 to 2.2	3 × 7A	2	< 7.5 (480V)
	3G3AX-NFI42	3.7	3 × 10A	4	< 7.5 (480V)
	3G3AX-NFI43	5.5, 7.5	3 × 20 A	6	< 7.5 (480 V)
	3G3AX-NFI44	11	3 × 30 A	9	< 7.5 (480 V)
	3G3AX-NFI45	15	3 × 40 A	12	< 7.5 (480 V)
	3G3AX-NFI46	18.5	3 × 50 A	15	< 7.5 (480 V)
	3G3AX-NFI47	22	3 × 60 A	17	< 7.5 (480 V)
	3G3AX-NFI48	30	3 × 80 A	21	< 7.5 (480 V)
	3G3AX-NFI49	37	3 × 100 A	23	< 7.5 (480 V)
	3G3AX-NFI4A	45, 55	3 × 150 A	45	< 7.5 (480 V)

Model	Case enclosure rating	Terminal size	Wire dia.	Weight (kg)
3G3AX-NFI21	Plastic, IP00	M4	1.25mm^2	0.5
3G3AX-NFI22	Plastic, IP00	M4	2mm^2	0.6
3G3AX-NFI23	Plastic, IP00	M4	2mm^2, 3.5mm^2	0.7
3G3AX-NFI21	Plastic, IP00	M4	1.25mm^2	0.5
3G3AX-NFI22	Plastic, IP00	M4	2mm^2	0.6
3G3AX-NFI23	Plastic, IP00	M4	2mm^2, 3.5mm^2	0.7
3G3AX-NFI24	Plastic, IP00	M4	5.5 mm^2	0.8
3G3AX-NFI25	Plastic, IP00	M5	8 mm^2	1.4
3G3AX-NFI26	Plastic, IP00	M5	14 mm^2	1.8
3G3AX-NFI27	Metal, IP00	M6	22 mm^2	3.6
3G3AX-NFI28	Metal, IP00	M8	30 mm^2	4.6
3G3AX-NFI29	Metal, IP00	M8	38 mm^2, 60 mm^2	9.0
3G3AX-NFI2A	Metal, IP00	M10	100 mm^2 or 38 mm^2, 2 wires parallel	16
3G3AX-NFI2B	Metal, IP00	M10	100 mm^2 or 38 mm^2, 2 wires parallel	16
3G3AX-NFI2C	Metal, IP00	M10	150 mm^2 or 60 mm^2, 2 wires parallel	23
3G3AX-NFI41	Plastic, IP00	M4	1.25mm^2, 2mm^2	0.7
3G3AX-NFI42	Plastic, IP00	M4	2mm^2	0.7
3G3AX-NFI43	Plastic, IP00	M4	2 mm^2, 3.5 mm^2	0.7
3G3AX-NFI44	Plastic, IP00	M4	5.5 mm^2	0.8
3G3AX-NFI45	Plastic, IP00	M5	8 mm^2	1.4
3G3AX-NFI46	Plastic, IP00	M5	14 mm^2	1.6
3G3AX-NFI47	Plastic, IP00	M5	14 mm^2	1.8
3G3AX-NFI48	Metal, IP00	M6	22 mm^2	3.6
3G3AX-NFI49	Metal, IP00	M8	38 mm^2	4.6
3G3AX-NFI4A	Metal, IP00	M8	38 mm^2, 60 mm^2	9.0

EMC Noise Filter (3G3AX-EFI□□□)

■Dimensional Drawing

3G3AX-EFI41/-EFI42

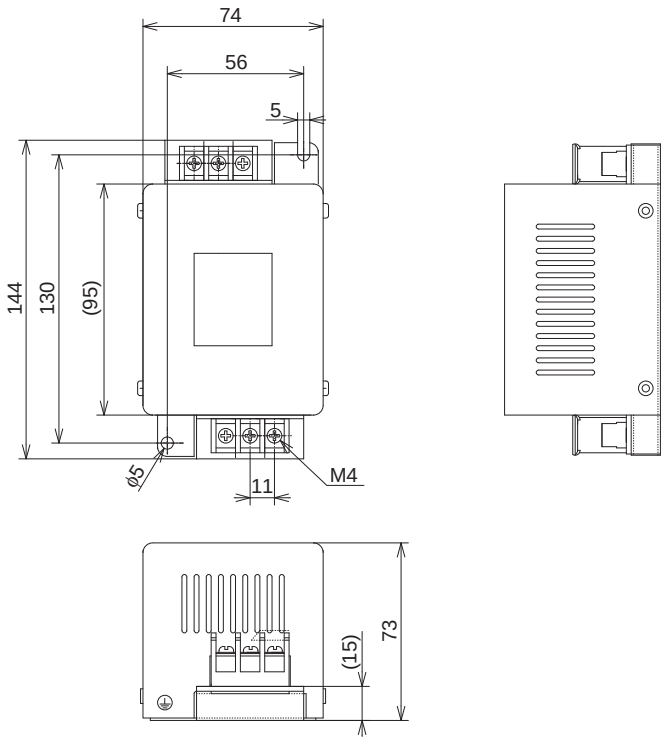

3G3AX-EFI43/-EFI44/-EFI45

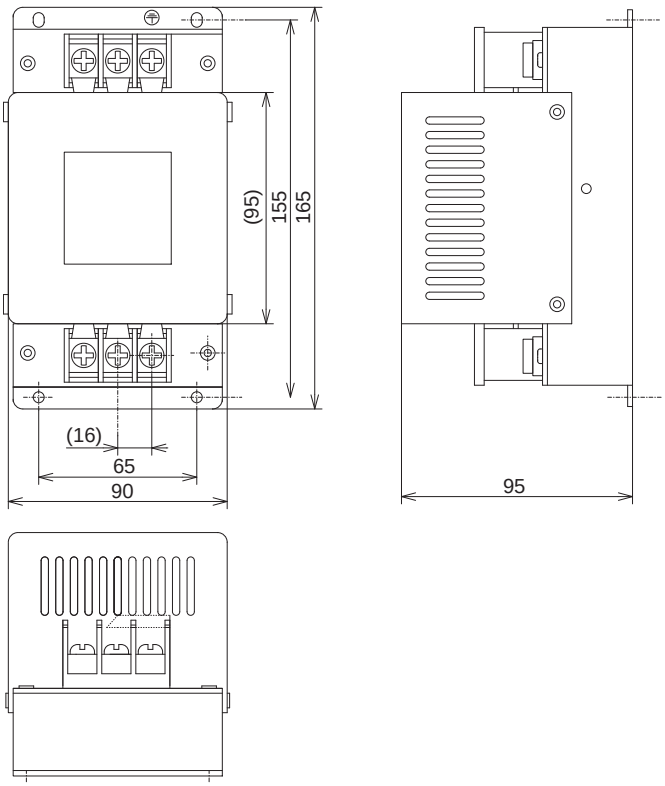

G3AX-EFI46/-EFI47/-EFI48/-EFI49/-EFI4A

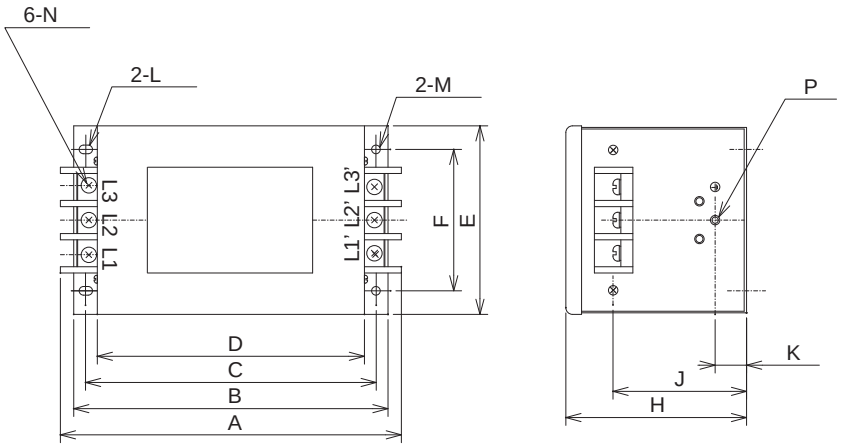

Model	Dimensions (Unit: mm)												
	A	B	C	D	E	F	H	J	K	L	M	N	P
3G3AX-EFI46	217	220	185	170	120	90	115	85	20	R2.75 Length 7	ϕ5.5	M6	M4
3G3AX-EFI47													
3G3AX-EFI48													
3G3AX-EFI49	254	230	215	200	150	120	115	80	30	R3.25 Length 8	ϕ6.5	M8	M6
3G3AX-EFI4A	314	300	280	260	200	170	130	90	35	R3.25 Length 8	ϕ6.5	M8	M6

3G3AX-EFI4B

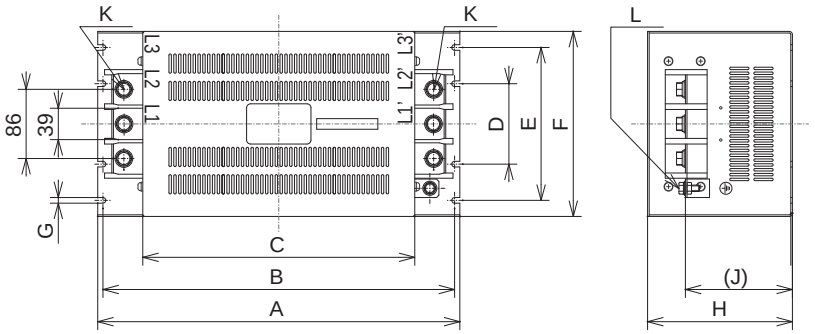

Model	Dimensions (Unit: mm)										
	A	B	C	D	E	F	G	H	J	K	L
3G3AX-EFI4B	450	430	338	100	190	230	7	180	(133)	M10	M8

■Specification

Voltage	Model	Applicable Inverter capacity (kw)		Input current In (A)	Leakage current (mA/ phase) at 60 Hz	Class
		3-phase 200 V	3-phase 400 V			
3-phase 200 V / 400 V	3G3AX-EFI41	0.4, 0.75	0.4 to 2.2	7A	150	A
	3G3AX-EFI42	1.5	3.7	10A	150	A
	3G3AX-EFI43	2.2, 3.7	5.5, 7.5	20A	170	A
	3G3AX-EFI44	5.5	11	30A	170	A
	3G3AX-EFI45	7.5	15	40A	170	A
	3G3AX-EFI46	—	18.5	50A	250	A
	3G3AX-EFI47	11	22	60A	250	A
	3G3AX-EFI48	15	30	80A	250	A
	3G3AX-EFI49	18.5	37	100A	250	A
	3G3AX-EFI4A	22, 30	45, 55	150A	250	A
	3G3AX-EFI4B	37	75, 90	200A	250	A

Model	Case enclosure rating	Terminal size	Wire dia.	Weight (kg)
3G3AX-EFI41	Plastic, IP00	M4	1.25mm^2, 2mm^2	0.7
3G3AX-EFI42			2mm^2	0.7
3G3AX-EFI43		M5	2mm^2, 3.5mm^2	1.0
3G3AX-EFI44			5.5mm^2	1.3
3G3AX-EFI45			8mm^2	1.4
3G3AX-EFI46	Metal, IP00	M6	14mm^2	2.9
3G3AX-EFI47			14mm^2	3.0
3G3AX-EFI48			22mm^2	3.6
3G3AX-EFI49		M8	30mm^2, 38mm^2	4.3
3G3AX-EFI4A			38mm^2, 60mm^2	9.0
3G3AX-EFI4B		M10	100 mm^2 or 38 mm^2, 2 wires parallel	16.0

Output Noise Filter (3G3AX-NFO□□)

■Dimensional Drawing

3G3AX-NFO01/-NFO02

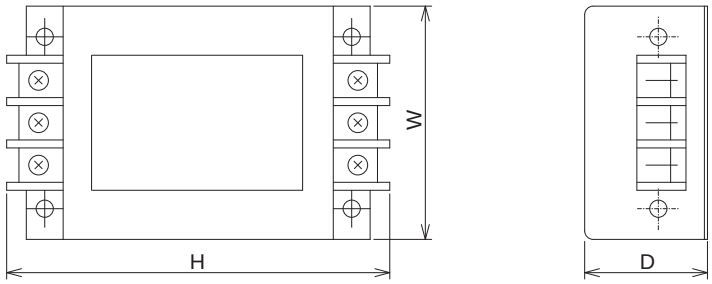

3G3AX-NFO03/-NFO04/-NFO05/-NFO06/-NFO07

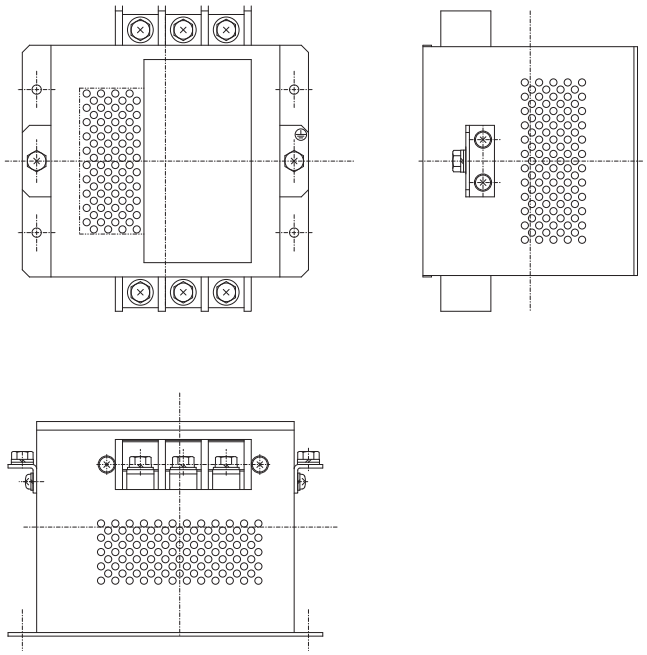

■Specifications

Power supply	Model	Rated current (A)	Applicable motor (kW)		External dimensions (Height × Width × Depth) (mm)	Weight (kg)
			200-V class	400-V class		
3-phase (3-wire) rated voltage 500 V AC	3G3AX-NFO01	6	0.75 max.	2.2 max.	156 × 95 × 50	0.7
	3G3AX-NFO02	12	1.5, 2.2	3.7	176 × 110 × 70	0.9
	3G3AX-NFO03	25	3.7, 5.5	5.5 to 11	154 × 160 × 120	2.1
	3G3AX-NFO04	50	7.5, 11	15, 18.5, 22	210 × 200 × 150	3.7
	3G3AX-NFO05	75	15	30, 37	230 × 220 × 170	5.7
	3G3AX-NFO06	100	18.5, 22	45	237 × 220 × 170	8.4
	3G3AX-NFO07	150	30, 37	55, 75	257 × 240 × 170	9.0

AC Reactor (3G3AX-AL□□□□)

■Dimensional Drawing

3G3AX-AL2025/-AL2055/-AL4025/-AL4055/-AL4110

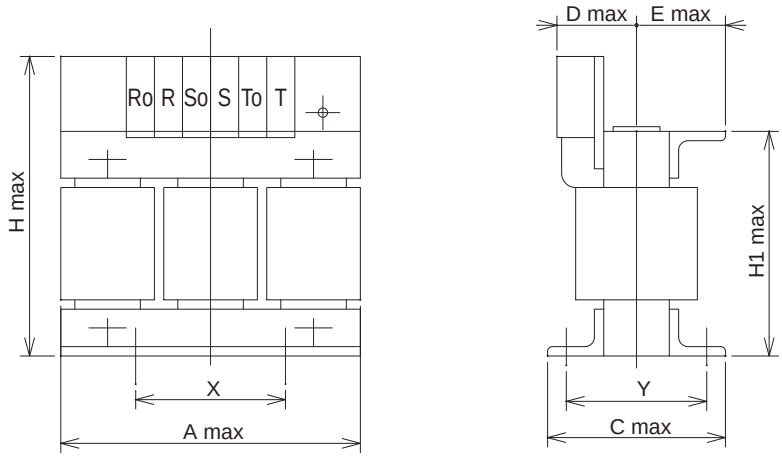

3G3AX-AL2110/-AL2220/-AL2330/-AL2500/-AL2750
-AL4220/-AL4330/-AL4500/-AL4750

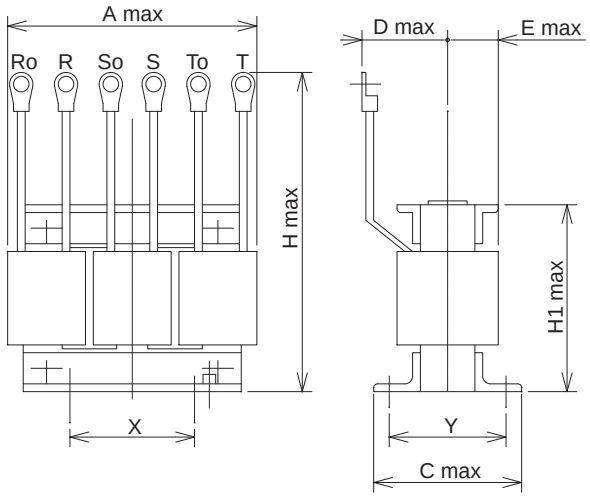

■Specifications

Power supply	Model	Applicable Inverter capacity (kw)	External dimensions (mm)								Weight (kg)
			A	C	D	E	H	H1	X	Y	
3-phase 200 V AC	3G3AX-AL2025	0.2 to 1.5	130	82	60	40	150	92	50	67	2.8
	3G3AX-AL2055	2.2, 3.7	140	98	60	40	150	92	50	75	4.0
	3G3AX-AL2110	5.5, 7.5	160	103	70	55	170	106	60	80	5.0
	3G3AX-AL2220	11, 15	180	113	75	55	190	138	90	90	10.0
	3G3AX-AL2330	18.5, 22	180	113	85	60	230	138	125	90	11.0
	3G3AX-AL2500	30, 37	260	113	85	60	290	200	100	90	19.0
	3G3AX-AL2750	45, 55	260	144	110	80	290	200	125	112	25.0
3-phase 400 V AC	3G3AX-AL4025	0.4 to 1.5	130	82	60	40	150	92	50	67	2.7
	3G3AX-AL4055	2.2, 3.7	130	98	60	40	150	92	50	75	4.0
	3G3AX-AL4110	5.5, 7.5	160	116	75	55	170	106	60	98	6.0
	3G3AX-AL4220	11, 15	180	103	75	55	190	138	100	80	10.0
	3G3AX-AL4330	18.5, 22	180	123	85	60	230	138	100	100	11.5
	3G3AX-AL4500	30, 37	260	113	85	60	290	200	100	90	19.0
	3G3AX-AL4750	45, 55	260	146	110	80	290	205	125	112	25.0

Digital Operator (3G3AX-OP)

3G3AX-OP01

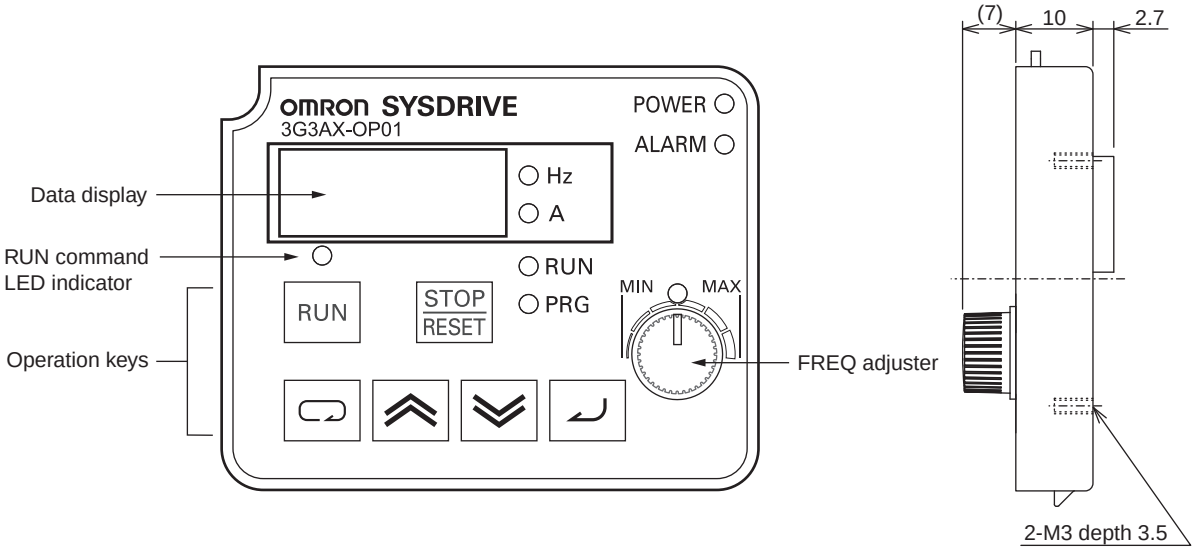

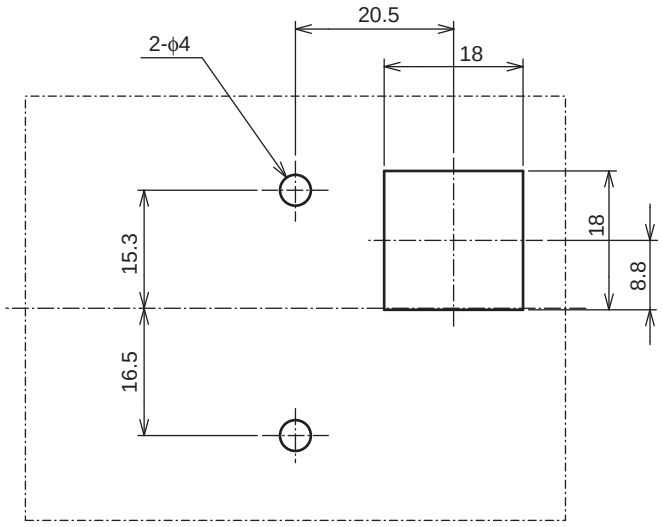

Panel cut dimensions

External dimensions	Height (55 mm) × Width (70 mm) × Depth (10 mm)

Appendix

Appendix-1 Parameter List..... App-1
Appendix-2 Product Life Curve..... App-41
Appendix-3 Life Alarm Output App-42

Appendix-1 Parameter List

Monitor Mode (d□□□)

- The default setting displays "d001" at power-on. To select the optional display, change the setting in "b038".

Parameter No.	Function name	Monitor or data range	Default setting	Changes during operation		Unit	Page
				Normal	b031 = 10		
d001	Output frequency monitor	0.0 to 400.0	—	Yes	—	Hz	4-1
d002	Output current monitor	0.0 to 999.9 1000 to 9999	—	—	—	A	4-1
d003	Rotation direction monitor	F: Forward o: Stop r: Reverse	—	—	—	—	4-1
d004	PID feedback value monitor	0.00 to 99.99 100.0 to 999.9 1000. to 9999. 1000 to 9999 (10000 to 99990) ⌈100 to ⌈999 (100000 to 999000) (Enabled when the PID function is selected)	—	—	—	—	4-1
d005	Multi-function input monitor	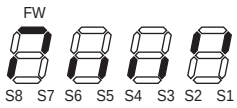 (Example) Terminals FW, S7, S2, S1 : ON Terminals S8, S6, S5, S4, S3: OFF	—	—	—	—	4-2
d006	Multi-function output monitor	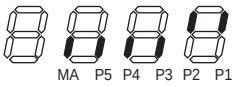 (Example) Terminals P2, P1 : ON Terminals MA, P5, P4, P3: OFF	—	—	—	—	4-2
d007	Output frequency monitor (after conversion)	0.00 to 99.99 100.0 to 999.9 1000. to 9999. 1000 to 3996 (10000 to 39960) (Output frequency × Conversion factor of b086)	—	Yes	—	—	4-2
d008	Real frequency monitor	-400. to -100. -99.9 to 0.00 to 99.99 100.0 to 400.0	—	—	—	Hz	4-3
d009	Torque reference monitor	-200. to +200.	—	—	—	%	4-3
d010	Torque bias monitor	-200. to +200.	—	—	—	%	4-3
d012	Output torque monitor	-200. to +200.	—	—	—	%	4-3
d013	Output voltage monitor	0. to 600.	—	—	—	V	4-4

Parameter No.	Function name	Monitor or data range	Default setting	Changes during operation		Unit	Page
				Normal	b031 = 10		
d014	Input power monitor	0.0 to 999.9	—	—	—	kW	4-4
d015	Integrated power monitor	0.0 to 999.9 1000. to 9999. 1000 to 9999 (10000 to 99990) ⌈100 to ⌈999 (100000 to 999000)	—	—	—	—	4-4
d016	Total RUN time	0. to 9999. 1000 to 9999 (10000 to 99990) ⌈100 to ⌈999 (100000 to 999000)	—	—	—	h	4-4
d017	Power ON time monitor	0. to 9999. 1000 to 9999 (10000 to 99990) ⌈100 to ⌈999 (100000 to 999000)	—	—	—	h	4-5
d018	Fin temperature monitor	-020. to 200.0	—	—	—	°C	4-5
d019	Motor temperature monitor	-020. to 200.0	—	—	—	°C	4-5
d022	Life assessment monitor	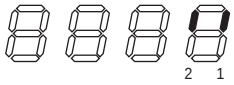 ON 1: Capacitor on the main circuit board OFF 2: Cooling fan rotation speed reduced	—	—	—	—	4-5
d023	Not used	—	—	—	—	—	—
d024	Not used	—	—	—	—	—	—
d025	Not used	—	—	—	—	—	—
d026	Not used	—	—	—	—	—	—
d027	Not used	—	—	—	—	—	—
d028	Pulse counter monitor	0 to 2147483647 (Displays MSB 4 digits)	—	—	—	—	4-5
d029	Position command monitor	-1073741823 to 1073741823 (Displays MSB 4 digits including "-")	—	—	—	—	4-6
d030	Current position monitor	-1073741823 to 1073741823 (Displays MSB 4 digits including "-")	—	—	—	—	4-6 4-132
d080	Fault frequency monitor	0. to 9999. 1000 to 6553 (10000 to 65530)	—	—	—	Time	4-6
d081	Fault monitor 1 (Latest)	Error code (condition of occurrence) →Output frequency [Hz] → Output current [A] →Internal DC voltage [V] →RUN time [h] →ON time [h]	—	—	—	—	4-6
d082	Fault monitor 2						4-6
d083	Fault monitor 3						4-6
d084	Fault monitor 4						4-6
d085	Fault monitor 5						4-6
d086	Fault monitor 6						4-6
d090	Warning monitor	Warning code	—	—	—	—	4-7
d102	DC voltage monitor	0.0 to 999.9	—	—	—	V	4-7

Parameter No.	Function name	Monitor or data range	Default setting	Changes during operation		Unit	Page
				Normal	b031 = 10		
d103	Regenerative braking load rate monitor	0.0 to 100.0	—	—	—	%	4-7
d104	Electronic thermal monitor	0.0 to 100.0	—	—	—	%	4-7

Basic Function Mode (F□□□)

Parameter No.	Function name	Monitor or data range	Default setting	Changes during operation		Unit	Page
				Normal	b031 = 10		
F001	Output frequency setting/monitor	0.0/Starting frequency to 1st/2nd/3rd max. frequency 0.0 to 100.0 (PID control enabled)	—	Yes	Yes	Hz	4-8
F002	Acceleration time 1	0.01 to 99.99 100.0 to 999.9 1000. to 3600.	30.00	Yes	Yes	s	4-8
F202	* 2nd acceleration time 1	0.01 to 99.99 100.0 to 999.9 1000. to 3600.	30.00	Yes	Yes	s	4-8
F302	* 3rd acceleration time 1	0.01 to 99.99 100.0 to 999.9 1000. to 3600.	30.00	Yes	Yes	s	4-8
F003	Deceleration time 1	0.01 to 99.99 100.0 to 999.9 1000. to 3600.	30.00	Yes	Yes	s	4-8
F203	* 2nd deceleration time 1	0.01 to 99.99 100.0 to 999.9 1000. to 3600.	30.00	Yes	Yes	s	4-8
F303	* 3rd deceleration time 1	0.01 to 99.99 100.0 to 999.9 1000. to 3600.	30.00	Yes	Yes	s	4-8
F004	Operator rotation direction selection	00: (Forward) 01: (Reverse)	00	No	No	—	4-10

* 2nd/3rd control is displayed when "SET(08)/SET3(17)" is allocated to one of multi-function inputs from C001 to C008.

Extended Function Mode

Parameter No.		Function name	Monitor or data range	Default setting	Changes during operation		Unit	Page
					Normal	b031 = 10		
Basic setting	A001	Frequency reference selection	00: Digital Operator (FREQ adjuster) (Enabled when 3G3AX-OP01 is used.) 01: Terminal 02: Digital Operator (F001) 03: ModBus communication 04: Option 1 05: Option 2 06: Pulse train frequency 07: Not used 10: Operation function result	02	No	No	—	4-10 4-138
	A002	RUN command selection	01: Terminal 02: Digital Operator (F001) 03: ModBus communication 04: Option 1 05: Option 2	02	No	No	—	4-11
	A003	Base frequency	30. to Maximum frequency [A004]	60.	No	No	Hz	4-11 4-109
	A203	* 2nd base frequency	30. to 2nd maximum frequency [A204]	60.				4-11
	A303	* 3rd base frequency	30. to 3rd maximum frequency [A304]	60.				
	A004	Maximum frequency	30. to 400.	60.	No	No	Hz	4-12
	A204	* 2nd maximum frequency	30. to 400.	60.				
	A304	* 3rd maximum frequency	30. to 400.	60.				

* 2nd/3rd control is displayed when "SET(08)/SET3(17)" is allocated to one of multi-function inputs from C001 to C008.

Parameter No.		Function name	Monitor or data range	Default setting	Changes during operation		Unit	Page
					Normal	b031 = 10		
Analog input, Others	A005	FV/FI selection	00: Switches between FV/FI via terminal AT 01: Switches between FV/FE via terminal AT 02: Switches between FV/FREQ adjuster via terminal AT (Enabled only when 3G3AX-OP01 is used) 03: Switches between FI/FREQ adjuster via terminal AT (Enabled only when 3G3AX-OP01 is used) 04: Switches between FE/FREQ adjuster via terminal AT (Enabled only when 3G3AX-OP01 is used)	00	No	No	—	4-12
	A006	FE selection	00: FE only 01: FV/FI auxiliary frequency reference (not reversible) 02: FV/FI auxiliary frequency reference (reversible) 03: FE disabled	03	No	No	—	4-13
	A011	FV start frequency	0.00 to 99.99 100.0 to 400.0	0.00	No	Yes	Hz	4-14
	A012	FV end frequency	0.00 to 99.99 100.0 to 400.0	0.00	No	Yes	Hz	
	A013	FV start ratio	0. to FV end ratio	0.	No	Yes	%	
	A014	FV end ratio	FV start ratio to 100.	100.	No	Yes	%	
	A015	FV start selection	00: External start frequency (A011 set value) 01: 0 Hz	01	No	Yes	—	
	A016	FV, FE, FI sampling	1. to 30. 31. (with 500 ms filter ± 0.1 Hz hysteresis)	31.	No	Yes	—	4-16
	A017	Not used	Use "00". * Do not change.	00	No	No	—	—

* 2nd/3rd control is displayed when "SET(08)/SET3(17)" is allocated to one of multi-function inputs from C001 to C008.

	Parameter No.	Function name	Monitor or data range	Default setting	Changes during operation		Unit	Page
					Normal	b031 = 10		
Multi-step speed, Jogging	A019	Multi-step speed selection	00: Binary: 16-step selection with 4 terminals 01: Bit: 8-step selection with 7 terminals	00	No	No	—	4-16
	A020	Multi-step speed reference 0	0.0/Starting frequency to Max. frequency	6.00	Yes	Yes	Hz	4-8 4-16
	A220	* 2nd multi-step speed reference 0	0.0/Starting frequency to 2nd Max. frequency	6.00	Yes	Yes	Hz	
	A320	* 3rd multi-step speed reference 0	0.0/Starting frequency to 3rd Max. frequency	6.00	Yes	Yes	Hz	
	A021	Multi-step speed reference 1	0.0/Starting frequency to Max. frequency	0.00	Yes	Yes	Hz	4-16
	A022	Multi-step speed reference 2		0.00				
	A023	Multi-step speed reference 3		0.00				
	A024	Multi-step speed reference 4		0.00				
	A025	Multi-step speed reference 5		0.00				
	A026	Multi-step speed reference 6		0.00				
	A027	Multi-step speed reference 7		0.00				
	A028	Multi-step speed reference 8		0.00				
	A029	Multi-step speed reference 9		0.00				
	A030	Multi-step speed reference 10		0.00				
	A031	Multi-step speed reference 11		0.00				
	A032	Multi-step speed reference 12		0.00				
	A033	Multi-step speed reference 13		0.00				
	A034	Multi-step speed reference 14		0.00				
	A035	Multi-step speed reference 15		0.00				

* 2nd/3rd control is displayed when "SET(08)/SET3(17)" is allocated to one of multi-function inputs from C001 to C008.

Parameter No.		Function name	Monitor or data range	Default setting	Changes during operation		Unit	Page
					Normal	b031 = 10		
Multi-step speed, Jogging	A038	Jogging frequency	0.00/Starting frequency to 9.99	6.00	Yes	Yes	Hz	4-18
	A039	Jogging stop selection	00: Free running on jogging stop/ Disabled in operation 01: Deceleration stop on jogging stop/ Disabled in operation 02: DC injection braking on jogging stop/ Disabled in operation 03: Free running on jogging stop/ Enabled in operation 04: Deceleration stop on jogging stop/ Enabled in operation 05: DC injection braking on jogging stop/ Enabled in operation	00	No	Yes	—	
V/f characteristics	A041	Torque boost selection	00: Manual torque boost 01: Automatic torque boost	00	No	No	—	4-19
	A241	* 2nd torque boost selection		00				
	A042	Manual torque boost voltage	0.0 to 20.0	1.0	Yes	Yes	%	
	A242	* 2nd manual torque boost voltage		1.0				
	A342	* 3rd manual torque boost voltage		1.0				
	A043	Manual torque boost frequency	0.0 to 50.0	5.0	Yes	Yes	%	
	A243	* 2nd manual torque boost frequency		5.0				
	A343	* 3rd manual torque boost frequency		5.0				
	A044	V/f characteristics selection	00: Constant torque characteristics (VC) 01: Special reduced torque characteristics (special VP) 02: Free V/f characteristics 03: Sensorless vector control (SLV) 04: 0-Hz sensorless vector control 05: Sensor vector control (V2)	00	No	No	—	4-21
	A244	* 2nd V/f characteristics selection	00: Constant torque characteristics (VC) 01: Special reduced torque characteristics (special VP) 02: Free V/f characteristics 03: Sensorless vector control (SLV) 04: 0-Hz sensorless vector control	00				
	A344	* 3rd V/f characteristics selection	00: Constant torque characteristics (VC) 01: Special reduced torque characteristics (special VP)	00				
	A045	Output voltage gain	20. to 100.	100.	Yes	Yes	%	4-24

* 2nd/3rd control is displayed when "SET(08)/SET3(17)" is allocated to one of multi-function inputs from C001 to C008.

Parameter No.		Function name	Monitor or data range	Default setting	Changes during operation		Unit	Page
					Normal	b031 = 10		
V/f characteristics	A046	Automatic torque boost voltage compensation gain	0. to 255.	100.	Yes	Yes	—	4-20
	A246	* 2nd automatic torque boost voltage compensation gain	0. to 255.	100.				
	A047	Automatic torque boost slip compensation gain	0. to 255.	100.	Yes	Yes	—	
	A247	* 2nd automatic torque boost slip compensation gain	0. to 255.	100.				
DC injection braking	A051	DC injection braking selection	00: Disabled 01: Enabled 02: Frequency control [A052 set value]	00	No	Yes	—	4-24 4-109
	A052	DC injection braking frequency	0.00 to 99.99 100.0 to 400.0	0.50	No	Yes	Hz	4-24
	A053	DC injection braking delay time	0.0 to 5.0	0.0	No	Yes	s	4-24
	A054	DC injection braking power	0. to 100. (0.4 to 55 kW)	50.	No	Yes	%	
			0. to 80. (75 to 132 kW)	40.	No	Yes	%	
	A055	DC injection braking time	0.0 to 60.0	0.5	No	Yes	s	
	A056	DC injection braking method selection	00: Edge operation 01: Level operation	01	No	Yes	—	
	A057	Startup DC injection braking power	0. to 100. (0.4 to 55 kW) 0. to 80. (75 to 132 kW)	0.	No	Yes	%	
	A058	Startup DC injection braking time	0.0 to 60.0	0.0	No	Yes	s	
	A059	DC injection braking carrier frequency	0.5 to 15.0 (0.4 to 55 kW)	5.0	No	No	kHz	
			0.5 to 10.0 (75 to 132 kW)	3.0	No	No	kHz	
Upper/Lower limiter, Jump	A061	Frequency upper limit	0.00/Frequency lower limit to Max. frequency	0.00	No	Yes	Hz	4-28
	A261	* 2nd frequency upper limit	0.00/2nd frequency lower limit to 2nd Max. frequency	0.00				
	A062	Frequency lower limit	0.00/Starting frequency to Frequency upper limit	0.00	No	Yes	Hz	
	A262	* 2nd frequency lower limit	0.00/Starting frequency to 2nd frequency upper limit	0.00				

* 2nd/3rd control is displayed when "SET(08)/SET3(17)" is allocated to one of multi-function inputs from C001 to C008.

Parameter No.		Function name	Monitor or data range	Default setting	Changes during operation		Unit	Page
					Normal	b031 = 10		
Upper/Lower limit, Jump	A063	Jump frequency 1	Jump frequency: 0.0 to 400.0 Jump frequency width: 0.0 to 10.0	0.00	No	Yes	Hz	4-30
	A064	Jump frequency width 1		0.50				
	A065	Jump frequency 2		0.00				
	A066	Jump frequency width 2		0.50				
	A067	Jump frequency 3		0.00				
	A068	Jump frequency width 3		0.50				
	A069	Acceleration stop frequency	0.00 to 99.99 100.0 to 400.0	0.00	No	Yes	Hz	
	A070	Acceleration stop time	0.0 to 60.0	0.0	No	Yes	s	
PID control	A071	PID selection	00: Disabled 01: Enabled 02: Reverse output enabled	00	No	Yes	—	4-31
	A072	PID P gain	0.2 to 5.0	1.0	Yes	Yes	—	
	A073	PID I gain	0.0 to 999.9 1000. to 3600.	1.0	Yes	Yes	s	
	A074	PID D gain	0.00 to 99.99 100.0	0.00	Yes	Yes	s	
	A075	PID scale	0.01 to 99.99	1.00	No	Yes	Time	
	A076	PID feedback selection	00: FI 01: FV 02: RS485 communication 03: Pulse train frequency 10: Operation function output	00	No	Yes	—	
	A077	Reverse PID function	00: OFF (Deviation = Target value - Feedback value) 01: ON (Deviation = Feedback value - Target value)	00	No	Yes	—	
	A078	PID output limit function	0.0 to 100.0	0.0	No	Yes	%	
PID control	A079	PID feedforward selection	00: Disabled 01: FV 02: FI 03: FE	00	No	Yes	—	4-31
AVR	A081	AVR selection	00: Always ON 01: Always OFF 02: OFF during deceleration	02	No	No	—	4-35
	A082	AVR voltage selection	200-V class: 200/215/220/230/240 400-V class: 380/400/415/440/460/480	200/400	No	No	V	

* 2nd/3rd control is displayed when "SET(08)/SET3(17)" is allocated to one of multi-function inputs from C001 to C008.

	Parameter No.	Function name	Monitor or data range	Default setting	Changes during operation		Unit	Page
					Normal	b031 = 10		
RUN mode, Acceleration/Deceleration functions	A085	RUN mode selection	00: Normal operation 01: Energy-saving operation 02: Automatic operation	00	No	No	—	4-36
	A086	Energy-saving response/accuracy adjustment	0.0 to 100.0	50.0	Yes	Yes	—	
	A092	Acceleration time 2	0.01 to 99.99 100.0 to 999.9 1000. to 3600.	15.00	Yes	Yes	s	4-37
	A292	* 2nd acceleration time 2		15.00				
	A392	* 3rd acceleration time 2		15.00				
	A093	Deceleration time 2		15.00				
	A293	* 2nd deceleration time 2		15.00				
	A393	* 3rd deceleration time 2		15.00				
	A094	2-step acceleration/ deceleration selection	00: Switched via multi-function input 09 (2CH) 01: Switched by setting 02: Enabled only when switching forward/ reverse	00	No	No	—	
	A294	* 2nd 2-step acceleration/ deceleration selection		00				
	A095	2-step acceleration frequency	0.00 to 99.99 100.0 to 400.0	0.00	No	No	Hz	
	A295	* 2nd 2-step acceleration frequency		0.00				
	A096	2-step deceleration frequency		0.00	No	No	Hz	
	A296	* 2nd 2-step deceleration frequency		0.00				
	A097	Acceleration pattern selection	00: Line 01: S-shape curve 02: U-shape curve 03: Inverted U-shape curve 04: EL-S-shape curve	00	No	No	—	4-38
	A098	Deceleration pattern selection		00	No	No	—	

* 2nd/3rd control is displayed when "SET(08)/SET3(17)" is allocated to one of multi-function inputs from C001 to C008.

Parameter No.		Function name	Monitor or data range	Default setting	Changes during operation		Unit	Page
					Normal	b031 = 10		
External frequency adjustment	A101	FI start frequency	0.00 to 99.99 100.0 to 400.0	0.00	No	Yes	Hz	4-14
	A102	FI end frequency		0.00	No	Yes	Hz	
	A103	FI start ratio	0. to FI end ratio	20.	No	Yes	%	
	A104	FI end ratio	FI start ratio to 100.	100.	No	Yes	%	
	A105	FI start selection	00: Use FI start frequency [A101] 01: 0 Hz	00	No	Yes	—	
	A111	FE start frequency	-400. to -100. -99.9 to 0.00 to 99.99 100.0 to 400.0	0.00	No	Yes	Hz	4-15
	A112	FE end frequency		0.00	No	Yes	Hz	
	A113	FE start ratio	-100. to FE end ratio	-100.	No	Yes	%	
	A114	FE end ratio	FE start ratio to 100.	100.	No	Yes	%	
Acceleration/Deceleration	A131	Acceleration curve parameter	01 (small curve) to 10 (large curve)	02	No	Yes	—	4-39
	A132	Deceleration curve parameter		02	No	Yes	—	
Operation frequency	A141	Operation frequency input A setting	00: Digital Operator (F001) 01: Digital Operator (FREQ adjuster) (Enabled when 3G3AX-OP01 is used.) 02: Input FV 03: Input FI 04: RS485 communication 05: Option 1 06: Option 2 07: Pulse train frequency	02	No	Yes	—	4-41
	A142	Operation frequency input B setting		03	No	Yes	—	
	A143	Operator selection	00: Addition (A + B) 01: Subtraction (A - B) 02: Multiplication (A × B)	00	No	Yes	—	
	A145	Frequency addition amount	0.00 to 99.99 100.0 to 400.0	0.00	No	Yes	Hz	4-41
	A146	Frequency addition direction	00: Add A145 value to output frequency 01: Subtract A145 value from output frequency	00	No	Yes	—	

* 2nd/3rd control is displayed when "SET(08)/SET3(17)" is allocated to one of multi-function inputs from C001 to C008.

	Parameter No.	Function name	Monitor or data range	Default setting	Changes during operation		Unit	Page
					Normal	b031 = 10		
Acceleration/Deceleration	A150	EL-S-curve ratio 1 during acceleration	0. to 50.	25.	No	No	%	4-39
	A151	EL-S-curve ratio 2 during acceleration	0. to 50.	25.	No	No	%	
	A152	EL-S-curve ratio 1 during deceleration	0. to 50.	25.	No	No	%	
	A153	EL-S-curve ratio 2 during deceleration	0. to 50.	25.	No	No	%	
Momentary power interruption/Trip restart	b001	Retry selection	00: Alarm 01: 0 Hz start 02: Frequency matching start 03: Trip after frequency matching deceleration stop 04: Frequency pull-in restart	00	No	Yes	—	4-42
	b002	Allowable momentary power interruption time	0.3 to 25.0	1.0	No	Yes	s	
	b003	Retry wait time	0.3 to 100.0	1.0	No	Yes	s	4-85
	b004	Momentary power interruption/ undervoltage trip during stop selection	00: Disabled 01: Enabled 02: Disabled during stop and deceleration stop	00	No	Yes	—	4-42
	b005	Momentary power interruption retry time selection	00: 16 times 01: No limit	00	No	Yes	—	
	b006	Input phase loss protection selection	00: Disabled 01: Enabled	00	No	Yes	—	4-46
	b007	Frequency matching lower limit frequency setting	0.00 to 99.99 100.0 to 400.0	0.00	No	Yes	Hz	4-42 4-68 4-85
	b008	Trip retry selection	00: Trip 01: 0 Hz start 02: Frequency matching start 03: Trip after frequency matching deceleration stop 04: Frequency pull-in restart	00	No	Yes	—	4-42
	b009	Undervoltage retry time selection	00: 16 times 01: No limit	00	No	Yes	—	4-43
	b010	Overvoltage/ overcurrent retry time selection	1 to 3	3	No	Yes	Time	
	b011	Trip retry wait time	0.3 to 100.0	1.0	No	Yes	s	

* 2nd/3rd control is displayed when "SET(08)/SET3(17)" is allocated to one of multi-function inputs from C001 to C008.

Parameter No.		Function name	Monitor or data range	Default setting	Changes during operation		Unit	Page
					Normal	b031 = 10		
Electronic Thermal	b012	Electronic thermal level	0.20 × Rated current to 1.00 × Rated current	Rated current	No	Yes	A	4-46
	b212	* 2nd electronic thermal level						
	b312	* 3rd electronic thermal level						
	b013	Electronic thermal characteristics selection	00: Reduced torque characteristics 01: Constant torque characteristics 02: Free setting	00	No	Yes	—	
	b213	* 2nd electronic thermal characteristics selection						
	b313	* 3rd electronic thermal characteristics selection						
	b015	Free setting, electronic thermal frequency 1	0. to 400.	0.	No	Yes	Hz	4-47
	b017	Free setting, electronic thermal frequency 2						
	b019	Free setting, electronic thermal frequency 3						
	b016	Free setting, electronic thermal current 1	0.0 to Rated current	0.0	No	Yes	A	
	b018	Free setting, electronic thermal current 2						
	b020	Free setting, electronic thermal current 3						

* 2nd/3rd control is displayed when "SET(08)/SET3(17)" is allocated to one of multi-function inputs from C001 to C008.

Parameter No.		Function name	Monitor or data range	Default setting	Changes during operation		Unit	Page
					Normal	b031 = 10		
Overload limit, Overcurrent Protection	b021	Overload limit selection	00: Disabled 01: Enabled in acceleration/constant speed operation 02: Enabled in constant speed operation 03: Enabled in acceleration/constant speed operation (Accelerates during regeneration)	01	No	Yes	—	4-49
	b022	Overload limit level	0.20 × Rated current to 2.00 × Rated current (0.4 to 55 kW) 0.20 × Rated current to 1.80 × Rated current (75 to 132 kW)	1.50 × Rated current	No	Yes	A	
	b023	Overload limit parameter	0.10 to 30.00	1.00	No	Yes	s	
	b024	Overload limit selection 2	00: Disabled 01: Enabled in acceleration/constant speed operation 02: Enabled in constant speed operation 03: Enabled in acceleration/constant speed operation (Accelerates during regeneration)	01	No	Yes	—	
	b025	Overload limit level 2	0.20 × Rated current to 2.00 × Rated current (0.4 to 55 kW) 0.20 × Rated current to 1.80 × Rated current (75 to 132 kW)	1.50 × Rated current	No	Yes	A	
	b026	Overload limit parameter 2	0.10 to 30.00	1.00	No	Yes	s	
	b027	Overcurrent suppression function	00: Disabled 01: Enabled	01	No	Yes	—	4-51
	b028	Frequency pull-in restart level	0.20 × Rated current to 2.00 × Rated current (0.4 to 55 kW) 0.20 × Rated current to 1.80 × Rated current (75 to 132 kW)	Rated current	No	Yes	A	4-43 4-69
	b029	Frequency pull-in restart parameter	0.10 to 30.00	0.50	No	Yes	s	
	b030	Starting frequency at frequency pull-in restart	00: Frequency at interruption 01: Max. frequency 02: Set frequency	00	No	Yes	—	

* 2nd/3rd control is displayed when "SET(08)/SET3(17)" is allocated to one of multi-function inputs from C001 to C008.

Parameter No.		Function name	Monitor or data range	Default setting	Changes during operation		Unit	Page
					Normal	b031 = 10		
Lock	b031	Soft lock selection	00: Data other than b031 cannot be changed when terminal SFT is ON. 01: Data other than b031 and the specified frequency parameter cannot be changed when terminal SFT is ON. 02: Data other than b031 cannot be changed. 03: Data other than b031 and the specified frequency parameter cannot be changed. 10: Data can be changed during RUN.	01	No	Yes	—	4-51
Others	b034	RUN time/Power ON time setting	0. to 9999. (0 to 99990) 1000 to 6553 (100000 to 655300)	0.	No	Yes	h	4-52
	b035	Rotation direction limit selection	00: Forward and Reverse are enabled 01: Only Forward is enabled. 02: Only Reverse is enabled.	00	No	No	—	4-52
	b036	Reduced voltage startup selection	0 (Reduced voltage startup time: small) to 255 (Reduced voltage startup time: large)	6	No	Yes	—	4-53
	b037	Display selection	00: Complete display 01: Individual display of functions 02: User setting 03: Data comparison display 04: Basic display	04	No	Yes	—	4-53
	b038	Initial screen selection	00: Screen when the Enter key was pressed last 01: d001 02: d002 03: d003 04: d007 05: F001	01	No	Yes	—	4-56
	b039	User parameter automatic setting function selection	00: Disabled 01: Enabled	00	No	Yes	—	4-57

* 2nd/3rd control is displayed when "SET(08)/SET3(17)" is allocated to one of multi-function inputs from C001 to C008.

Parameter No.		Function name	Monitor or data range	Default setting	Changes during operation		Unit	Page
					Normal	b031 = 10		
Torque limit	b040	Torque limit selection	00: Four-quadrant separate setting 01: Terminal switch 02: Analog input 03: Option 1 04: Option 2	00	No	Yes	—	4-57 4-59
	b041	Torque limit 1 (Four-quadrant mode forward power running)	0. to 200. (0.4 to 55 kW) 0. to 180. (75 to 132 kW) no (Torque limit disabled)	150.	No	Yes	%	4-57 4-59
	b042	Torque limit 2 (Four-quadrant mode reverse regeneration)	0. to 200. (0.4 to 55 kW) 0. to 180. (75 to 132 kW) no (Torque limit disabled)	150.	No	Yes	%	4-57 4-59
	b043	Torque limit 3 (Four-quadrant mode reverse power running)	0. to 200. (0.4 to 55 kW) 0. to 180. (75 to 132 kW) no (Torque limit disabled)	150.	No	Yes	%	
	b044	Torque limit 4 (Four-quadrant mode forward regeneration)	0. to 200. (0.4 to 55 kW) 0. to 180. (75 to 132 kW) no (Torque limit disabled)	150.	No	Yes	%	
	b045	Torque LADSTOP selection	00: Disabled 01: Enabled	00	No	Yes	—	4-59

* 2nd/3rd control is displayed when "SET(08)/SET3(17)" is allocated to one of multi-function inputs from C001 to C008.

Parameter No.		Function name	Monitor or data range	Default setting	Changes during operation		Unit	Page
					Normal	b031 = 10		
Others	b046	Reverse rotation prevention selection	00: Disabled 01: Enabled	00	No	Yes	—	4-59
	b050	Selection of non-stop function at momentary power interruption	00: Disabled 01: Enabled (deceleration stop) 02: Enabled (without recovery) 03: Enabled (with recovery)	00	No	No	—	4-60
	b051	Starting voltage of non-stop function at momentary power interruption	0.0 to 999.9 1000.	220/ 440	No	No	V	
	b052	Stop deceleration level of non-stop function at momentary power interruption	0.0 to 999.9 1000.	360/ 720	No	No	V	
	b053	Deceleration time of non-stop function at momentary power interruption	0.01 to 99.99 100.0 to 999.9 1000. to 3600.	1.00	No	No	s	
	b054	Deceleration starting width of non-stop function at momentary power interruption	0.00 to 10.00	0.00	No	No	Hz	
	b055	Proportional gain setting of non-stop function at momentary power interruption	0.00 to 2.55	0.20	Yes	Yes	—	
	b056	Integral time setting of non-stop function at momentary power interruption	0.000 to 9.999/10.00 to 65.53	0.100	Yes	Yes	s	4-60

* 2nd/3rd control is displayed when "SET(08)/SET3(17)" is allocated to one of multi-function inputs from C001 to C008.

Parameter No.		Function name	Monitor or data range	Default setting	Changes during operation		Unit	Page
					Normal	b031 = 10		
Others	b060	Window comparator FV upper limit level	Set an upper limit level. Setting range: 0 to 100 Lower limit: Lower limit level + Hysteresis width × 2	100.	Yes	Yes	%	4-63
	b061	Window comparator FV lower limit level	Set a lower limit level. Setting range: 0 to 100 Upper limit: Upper limit level - Hysteresis width × 2	0.	Yes	Yes	%	
	b062	Window comparator FV hysteresis width	Set a hysteresis width for the upper and lower limit levels. Setting range: 0 to 10 Upper limit: (Upper limit level - Lower limit level) × 2	0.	Yes	Yes	%	
	b063	Window comparator FI upper limit level	Set an upper limit level. Setting range: 0 to 100 Lower limit: Lower limit level + Hysteresis width × 2	100.	Yes	Yes	%	
	b064	Window comparator FI lower limit level	Set a lower limit level. Setting range: 0 to 100 Upper limit: Upper limit level - Hysteresis width × 2	0.	Yes	Yes	%	
	b065	Window comparator FI hysteresis width	Set a hysteresis width for the upper and lower limit levels. Setting range: 0 to 10 Upper limit: (Upper limit level - Lower limit level) × 2	0.	Yes	Yes	%	
	b066	Window comparator FE upper limit level	Set an upper limit level. Setting range: -100 to 100 Lower limit: Lower limit level + Hysteresis width × 2	100.	Yes	Yes	%	
	b067	Window comparator FE lower limit level	Set a lower limit level. Setting range: -100 to 100 Upper limit: Upper limit level - Hysteresis width × 2	-100.	Yes	Yes	%	4-63
	b068	Window comparator FE hysteresis width	Set a hysteresis width for the upper and lower limit levels. Setting range: 0 to 10 Upper limit: (Upper limit level - Lower limit level) × 2	0.	Yes	Yes	%	
	b070	Analog operation level at FV disconnection	0. to 100./no (ignored)	no	No	Yes	—	
	b071	Analog operation level at FI disconnection	0. to 100./no (ignored)	no	No	Yes	—	
	b072	Analog operation level at FE disconnection	-100. to 100./no (ignored)	no	No	Yes	—	

* 2nd/3rd control is displayed when "SET(08)/SET3(17)" is allocated to one of multi-function inputs from C001 to C008.

Parameter No.		Function name	Monitor or data range	Default setting	Changes during operation		Unit	Page
					Normal	b031 = 10		
Others	b078	Integrated power clear	Cleared with the Enter key after changing to 01	00	Yes	Yes	—	4-4
	b079	Integrated power display gain	1. to 1000.	1.	Yes	Yes	—	
	b082	Starting frequency	0.10 to 9.99	0.50	No	Yes	Hz	4-65
	b083	Carrier frequency	0.5 to 15.0 (0.4 to 55 kW) *Derating enabled	5.0	No	No	kHz	4-65 4-117
			0.5 to 10.0 (75 to 132 kW) *Derating enabled	3.0	No	No	kHz	
	b084	Initialization selection	00: Clears the trip monitor 01: Initializes data 02: Clears the trip monitor and initializes data	00	No	No	—	4-66
	b085	Initialization parameter selection	00 *Do not change.	00	No	No	—	
	b086	Frequency conversion coefficient	0.1 to 99.0	1.0	Yes	Yes	—	4-2
	b087	STOP key selection	00: Enabled 01: Disabled 02: Disabled only during stop	00	No	Yes	—	4-68
	b088	Free-run stop selection	00: 0 Hz start 01: Frequency matching start 02: Frequency pull-in restart	00	No	Yes	—	4-69
	b089	Automatic carrier reduction	00: Disabled 01: Enabled	00	No	No	—	4-71
	b090	Usage rate of regenerative braking function	0.0 to 100.0	0.0	No	Yes	%	4-72
	b091	Stop selection	00: Deceleration → Stop 01: Free-run stop	00	No	Yes	—	4-68
	b092	Cooling fan control	00: Always ON 01: ON during RUN	01	No	Yes	—	4-72
	b095	Regenerative braking function operation selection	00: Disabled 01: Enabled (Disabled during stop) 02: Enabled (Enabled during stop)	00	No	Yes	—	
	b096	Regenerative braking function ON level	330 to 380 660 to 760	360/ 720	No	Yes	V	
	b098	Thermistor selection	00: Disabled 01: PTC enabled 02: NTC enabled	00	No	Yes	—	4-73
	b099	Thermistor error level	0. to 9999.	3000.	No	Yes	Ω	

* 2nd/3rd control is displayed when "SET(08)/SET3(17)" is allocated to one of multi-function inputs from C001 to C008.

Parameter No.		Function name	Monitor or data range	Default setting	Changes during operation		Unit	Page
					Normal	b031 = 10		
Vf free setting	b100	Free V/f frequency 1	0. to Free V/f frequency 2	0.	No	No	Hz	4-23
	b101	Free V/f voltage 1	0.0 to 800.0	0.0	No	No	V	
	b102	Free V/f frequency 2	0. to Free V/f frequency 3	0.	No	No	Hz	
	b103	Free V/f voltage 2	0.0 to 800.0	0.0	No	No	V	
	b104	Free V/f frequency 3	0. to Free V/f frequency 4	0.	No	No	Hz	
	b105	Free V/f voltage 3	0.0 to 800.0	0.0	No	No	V	
	b106	Free V/f frequency 4	0. to Free V/f frequency 5	0.	No	No	Hz	
	b107	Free V/f voltage 4	0.0 to 800.0	0.0	No	No	V	
	b108	Free V/f frequency 5	0. to Free V/f frequency 6	0.	No	No	Hz	
	b109	Free V/f voltage 5	0.0 to 800.0	0.0	No	No	V	
	b110	Free V/f frequency 6	0. to Free V/f frequency 7	0.	No	No	Hz	
	b111	Free V/f voltage 6	0.0 to 800.0	0.0	No	No	V	
	b112	Free V/f frequency 7	0. to 400.	0.	No	No	Hz	
	b113	Free V/f voltage 7	0.0 to 800.0	0.0	No	No	V	

* 2nd/3rd control is displayed when "SET(08)/SET3(17)" is allocated to one of multi-function inputs from C001 to C008.

Parameter No.		Function name	Monitor or data range	Default setting	Changes during operation		Unit	Page
					Normal	b031 = 10		
Others	b120	Brake control selection	00: Disabled 01: Enabled	00	No	Yes	—	4-75
	b121	Brake wait time for release	0.00 to 5.00	0.00	No	Yes	s	
	b122	Brake wait time for acceleration	0.00 to 5.00	0.00	No	Yes	s	
	b123	Brake wait time for stopping	0.00 to 5.00	0.00	No	Yes	s	
	b124	Brake wait time for confirmation	0.00 to 5.00	0.00	No	Yes	s	
	b125	Brake release frequency	0.00 to 99.99 100.0 to 400.0	0.00	No	Yes	Hz	
	b126	Brake release current	0.0 to 2.00 × Rated current (0.4 to 55 kW) 0.0 to 1.80 × Rated current (75 to 132 kW)	Rated current	No	Yes	—	
	b127	Brake input frequency	0.00 to 99.99 100.0 to 400.0	0.00	No	Yes	Hz	
	b130	Overvoltage protection function selection during deceleration	00: Disabled 01: DC voltage kept constant 02: Acceleration enabled	00	No	Yes	—	4-76
	b131	Overvoltage protection level during deceleration	200-V class: 330 to 390 400-V class: 660 to 780	380/760	No	Yes	V	
	b132	Overvoltage protection parameter	0.10 to 30.00	1.00	No	Yes	s	
	b133	Overvoltage protection proportional gain setting	0.00 to 2.55	0.50	Yes	Yes	—	
	b134	Overvoltage protection integral time setting	0.000 to 9.999 10.000 to 65.53	0.060	Yes	Yes	s	

* 2nd/3rd control is displayed when "SET(08)/SET3(17)" is allocated to one of multi-function inputs from C001 to C008.

Parameter No.		Function name	Monitor or data range	Default setting	Changes during operation		Unit	Page
					Normal	b031 = 10		
Multi-function input terminals	C001	Multi-function input 1 selection *1	01: RV (reverse) 02: CF1 (multi-step speed setting binary 1) 03: CF2 (multi-step speed setting binary 2) 04: CF3 (multi-step speed setting binary 3) 05: CF4 (multi-step speed setting binary 4) 06: JG (jogging) 07: DB (external DC injection braking) 08: SET (2nd control) 09: 2CH (2-step acceleration/deceleration) 11: FRS (free-run stop) 12: EXT (external trip) 13: USP (USP function) 14: CS (commercial switch) 15: SFT (soft lock) 16: AT (analog input switching) 17: SET3 (3rd control) 18: RS (reset) 20: STA (3-wire start) 21: STP (3-wire stop) 22: F/R (3-wire forward/reverse) 23: PID (PID enabled/disabled) 24: PIDC (PID integral reset) 26: CAS (control gain switching) 27: UP (UP/DWN function accelerated) 28: DWN (UP/DWN function decelerated) 29: UDC (UP/DWN function data clear) 31: OPE (forced operator) 32: SF1 (multi-step speed setting bit 1) 33: SF2 (multi-step speed setting bit 2) 34: SF3 (multi-step speed setting bit 3) 35: SF4 (multi-step speed setting bit 4) 36: SF5 (multi-step speed setting bit 5) 37: SF6 (multi-step speed setting bit 6) 38: SF7 (multi-step speed setting bit 7) 39: OLR (overload limit switching) 40: TL (torque limit enabled) 41: TRQ1 (torque limit switching 1) 42: TRQ2 (torque limit switching 2) 43: PPI (P/PI switching) 44: BOK (Brake confirmation) 45: ORT (orientation) 46: LAC (LAD cancel) 47: PCLR (position deviation clear) 48: STAT (pulse train position command input permission) 50: ADD (frequency addition) 51: F-TM (forced terminal block) 52: ATR (torque command input permission) 53: KHC (integrated power clear) 54: SON (servo ON) 55: FOC (preliminary excitation) 56: Not used 57: Not used 58: Not used 59: Not used 60: Not used 61: Not used 62: Not used 63: Not used 65: AHD (analog command held) 66: CP1 (position command selection 1) 67: CP2 (position command selection 2) 68: CP3 (position command selection 3) 69: ORL (zero return limit signal) 70: ORG (zero return startup signal) 71: FOT (forward driving stop) 72: ROT (reverse driving stop) 73: SPD (speed/position switching) 74: PCNT (pulse counter) 75: PCC (pulse counter clear) no: NO (no allocation)	01 *1	No	Yes	—	4-77
	C002	Multi-function input 2 selection		18				
	C003	Multi-function input 3 selection *1		12 *1				
	C004	Multi-function input 4 selection		02				
	C005	Multi-function input 5 selection		03				
	C006	Multi-function input 6 selection		04				
	C007	Multi-function input 7 selection		05				
	C008	Multi-function input 8 selection		06				

*1. C001 and C003 are forcibly rewritten into 18 (RS) and 64 (EMR), respectively, when the emergency shutoff function is enabled (SW1 = ON). (64 cannot be set optionally.)
When SW1 is turned ON once and then OFF, C003 has no allocations ("no").

* 2nd/3rd control is displayed when "SET(08)/SET3(17)" is allocated to one of multi-function inputs from C001 to C008.

Parameter No.		Function name	Monitor or data range	Default setting	Changes during operation		Unit	Page
					Normal	b031 = 10		
Multi-function input terminals	C011	Multi-function input 1 operation selection	00: NO 01: NC	00	No	Yes	—	4-79
	C012	Multi-function input 2 operation selection		00				
	C013	Multi-function input 3 operation selection		00				
	C014	Multi-function input 4 operation selection		00				
	C015	Multi-function input 5 operation selection		00				
	C016	Multi-function input 6 operation selection		00				
	C017	Multi-function input 7 operation selection		00				
	C018	Multi-function input 8 operation selection		00				
	C019	FW terminal operation selection		00				

* 2nd/3rd control is displayed when "SET(08)/SET3(17)" is allocated to one of multi-function inputs from C001 to C008.

Parameter No.		Function name	Monitor or data range	Default setting	Changes during operation		Unit	Page
					Normal	b031 = 10		
Multi-function output terminal	C021	Multi-function output terminal P1 selection	00: RUN (signal during RUN) 01: FA1 (constant speed arrival signal) 02: FA2 (over set frequency arrival signal) 03: OL (overload warning) 04: OD (excessive PID deviation) 05: AL (alarm output) 06: FA3 (set-frequency-only arrival signal) 07: OTQ (overtorque) 08: IP (signal during momentary power interruption) 09: UV (signal during undervoltage) 10: TRQ (torque limit) 11: RNT (RUN time over) 12: ONT (Power ON time over) 13: THM (thermal warning) 19: BRK (brake release) 20: BER (brake error) 21: ZS (0 Hz signal) 22: DSE (excessive speed deviation) 23: POK (position ready) 24: FA4 (set frequency exceeded 2) 25: FA5 (set frequency only 2) 26: OL2 (overload warning 2) 27: FVDc (analog FV disconnection detection) 28: FIDc (analog FI disconnection detection) 29: FEDc (analog FE disconnection detection) 31: FBV (PID FB status output) 32: NDc (network error) 33: LOG1 (logic operation output 1) 34: LOG2 (logic operation output 2) 35: LOG3 (logic operation output 3) 36: LOG4 (logic operation output 4) 37: LOG5 (logic operation output 5) 38: LOG6 (logic operation output 6) 39: WAC (capacitor life warning signal) 40: WAF (cooling fan life warning signal) 41: FR (starting contact signal) 42: OHF (fin overheat warning) 43: LOC (light load detection signal) 44: Not used 45: Not used 46: Not used 47: Not used 48: Not used 49: Not used 50: IRDY (operation ready signal) 51: FWR (forward run signal) 52: RVR (reverse run signal) 53: MJA (fatal fault signal) 54: WCFV (window comparator FV) 55: WCFI (window comparator FI) 56: WCFE (window comparator FE) (When C062 is used to select the alarm code output, the multi-function output terminals P1 to P3, or P1 to P4 are forcibly changed to AC0 to AC2 or AC0 to AC3 [Acn 'Alarm code output'], respectively.)	00	No	Yes	—	4-92
	C022	Multi-function output terminal P2 selection		01				
	C023	Multi-function output terminal P3 selection		03				
	C024	Multi-function output terminal P4 selection		07				
	C025	Multi-function output terminal P5 selection		40				
	C026	Relay output (MA, MB) function selection		05				

* 2nd/3rd control is displayed when "SET(08)/SET3(17)" is allocated to one of multi-function inputs from C001 to C008.

Parameter No.		Function name	Monitor or data range	Default setting	Changes during operation		Unit	Page
					Normal	b031 = 10		
Analog monitor	C027	MP selection	00: Output frequency 01: Output current 02: Output torque 03: Digital output frequency 04: Output voltage 05: Input voltage 06: Thermal load rate 07: LAD frequency 08: Digital current monitor 09: Motor temperature 10: Fin temperature 12: Not used	00	No	Yes	—	4-106 4-116
	C028	AM selection	00: Output frequency 01: Output current 02: Output torque 04: Output voltage 05: Input voltage 06: Thermal load rate 07: LAD frequency 09: Motor temperature 10: Fin temperature 11: Output torque <signed> 13: Not used	00	No	Yes	—	4-107 4-116
	C029	AMI selection	00: Output frequency 01: Output current 02: Output torque 04: Output voltage 05: Input voltage 06: Thermal load rate 07: LAD frequency 09: Motor temperature 10: Fin temperature 14: Not used	00	No	Yes	—	
	C030	Digital current monitor reference value	0.20 × Rated current to 2.00 × Rated current (Current value at the digital current monitor output 1440 Hz)	Rated current	Yes	Yes	A	4-106

* 2nd/3rd control is displayed when "SET(08)/SET3(17)" is allocated to one of multi-function inputs from C001 to C008.

Parameter No.		Function name	Monitor or data range	Default setting	Changes during operation		Unit	Page
					Normal	b031 = 10		
Multi-function output terminal	C031	Multi-function output terminal P1 contact selection	00: NO contact at MA; NC contact at MB 01: NC contact at MA; NO contact at MB	00	No	Yes	—	4-93
	C032	Multi-function output terminal P2 contact selection						
	C033	Multi-function output terminal P3 contact selection						
	C034	Multi-function output terminal P4 contact selection						
	C035	Multi-function output terminal P5 contact selection						
	C036	Relay output (MA, MB) contact selection		01				
Level and output terminal status	C038	Light load signal output mode	00: Enabled during acceleration/ deceleration/constant speed 01: Enabled only during constant speed	01	No	Yes	—	4-103
	C039	Light load detection level	0.0 to 2.00 × Rated current (0.4 to 55 kW) 0.0 to 1.80 × Rated current (75 to 132 kW)	Rated current	Yes	Yes	A	
	C040	Overload warning signal output mode	00: Enabled during acceleration/ deceleration/constant speed 01: Enabled only during constant speed	01	No	Yes	—	4-49
	C041	Overload warning level	0.0: Does not operate. 0.1 × Rated current to 2.00 × Rated current (0.4 to 55 kW) 0.1 × Rated current to 1.80 × Rated current (75 to 132 kW)	Rated current	Yes	Yes	A	
	C042	Arrival frequency during acceleration	0.00 to 99.99 100.0 to 400.0	0.00	No	Yes	Hz	4-95
	C043	Arrival frequency during deceleration	0.00 to 99.99 100.0 to 400.0	0.00	No	Yes	Hz	
	C044	PID deviation excessive level	0.0 to 100.0	3.0	No	Yes	%	4-31
	C045	Arrival frequency during acceleration 2	0.00 to 99.99 100.0 to 400.0	0.00	No	Yes	Hz	4-95
	C046	Arrival frequency during deceleration 2	0.00 to 99.99 100.0 to 400.0	0.00	No	Yes	Hz	
	C052	PID FB upper limit	0.0 to 100.0	100.0	No	Yes	%	4-31
	C053	PID FB lower limit	0.0 to 100.0	0.0	No	Yes	%	

* 2nd/3rd control is displayed when "SET(08)/SET3(17)" is allocated to one of multi-function inputs from C001 to C008.

Parameter No.		Function name	Monitor or data range	Default setting	Changes during operation		Unit	Page
					Normal	b031 = 10		
Level and output terminal status	C055	Overtorque level (Forward power running)	0. to 200. (0.4 to 55 kW) 0. to 180. (75 to 132 kW)	100.	No	Yes	%	4-97
	C056	Overtorque level (Reverse regeneration)		100.	No	Yes	%	
	C057	Overtorque level (Reverse power running)		100.	No	Yes	%	
	C058	Overtorque level (Forward regeneration)		100.	No	Yes	%	
	C061	Thermal warning level	0. to 100.	80.	No	Yes	%	4-47
	C062	Alarm code selection	00: Disabled 01: 3-bit 02: 4-bit	00	No	Yes	—	4-98
	C063	0 Hz detection level	0.00 to 99.99 100.0	0.00	No	Yes	Hz	4-98
	C064	Fin overheat warning level	0. to 200.	120.	No	Yes	°C	4-102

* 2nd/3rd control is displayed when "SET(08)/SET3(17)" is allocated to one of multi-function inputs from C001 to C008.

Parameter No.		Function name	Monitor or data range	Default setting	Changes during operation		Unit	Page
					Normal	b031 = 10		
Communication function	C071	Communication speed selection (Baud rate selection)	02: Loop-back test 03: 2400 bps 04: 4800 bps 05: 9600 bps 06: 19200 bps	04	No	Yes	—	4-141
	C072	Communication station No. selection	1. to 32.	1.	No	Yes	—	
	C073	Communication bit length selection	7: 7-bit 8: 8-bit	7	No	Yes	—	
	C074	Communication parity selection	00: No parity 01: Even 02: Odd	00	No	Yes	—	
	C075	Communication stop bit selection	1: 1-bit 2: 2-bit	1	No	Yes	—	
	C076	Communication error selection	00: Trip 01: Trip after deceleration stop 02: Ignore 03: Free-run stop 04: Deceleration stop	02	No	Yes	—	
	C077	Communication error timeout	0.00 to 99.99	0.00	No	Yes	s	4-101 4-141
	C078	Communication wait time	0. to 1000.	0.	No	Yes	ms	4-141
	C079	Communication method selection	00: ASCII 01: ModBus-RTU	01	No	Yes	—	
Adjustment	C081	FV adjustment	0. to 9999. 1000 to 6553 (10000 to 65530)	Factory default	Yes	Yes	—	—
	C082	FI adjustment	0. to 9999. 1000 to 6553 (10000 to 65530)	Factory default	Yes	Yes	—	—
	C083	FE adjustment	0. to 9999. 1000 to 6553 (10000 to 65530)	Factory default	Yes	Yes	—	—
	C085	Thermistor adjustment	0.0 to 999.9 1000.	Factory default	Yes	Yes	—	4-73
	C091	Not used	Use "00". * Do not change.	00	No	No	—	—

* 2nd/3rd control is displayed when "SET(08)/SET3(17)" is allocated to one of multi-function inputs from C001 to C008.

Parameter No.		Function name	Monitor or data range	Default setting	Changes during operation		Unit	Page
					Normal	b031 = 10		
Others	C101	UP/DWN selection	00: Do not store the frequency data 01: Store the frequency data	00	No	Yes	—	4-88
	C102	Reset selection	00: Trip reset at power-on 01: Trip reset when the power is OFF 02: Enabled only during trip (Reset when the power is ON) 03: Trip reset only	00	Yes	Yes	—	4-85 4-132
	C103	Reset frequency matching selection	00: 0 Hz start 01: Frequency matching start 02: Frequency pull-in restart	00	No	Yes	—	4-85
Meter adjustment	C105	MP gain setting	50. to 200.	100.	Yes	Yes	%	4-107
	C106	AM gain setting	50. to 200.	100.	Yes	Yes	%	4-108
	C107	AMI gain setting	50. to 200.	100.	Yes	Yes	%	
	C109	AM bias setting	0. to 100.	0.	Yes	Yes	%	
	C110	AMI bias setting	0. to 100.	20.	Yes	Yes	%	
Terminal	C111	Overload warning level 2	0.0 to 2.00 × Rated current (0.4 to 55 kW) 0.0 to 1.80 × Rated current (75 to 132 kW)	Rated current	Yes	Yes	A	4-49
Adjustment	C121	FV zero adjustment	0. to 9999. 1000 to 6553 (10000 to 65530)	Factory default	Yes	Yes	—	—
	C122	FI zero adjustment	0. to 9999. 1000 to 6553 (10000 to 65530)	Factory default	Yes	Yes	—	
	C123	FE zero adjustment	0. to 9999. 1000 to 6553 (10000 to 65530)	Factory default	Yes	Yes	—	

* 2nd/3rd control is displayed when "SET(08)/SET3(17)" is allocated to one of multi-function inputs from C001 to C008.

Parameter No.		Function name	Monitor or data range	Default setting	Changes during operation		Unit	Page
					Normal	b031 = 10		
Output terminal operation function	C130	Output P1 ON delay	0.0 to 100.0	0.0	No	Yes	s	4-105
	C131	Output P1 OFF delay	0.0 to 100.0	0.0				
	C132	Output P2 ON delay	0.0 to 100.0	0.0				
	C133	Output P2 OFF delay	0.0 to 100.0	0.0				
	C134	Output P3 ON delay	0.0 to 100.0	0.0				
	C135	Output P3 OFF delay	0.0 to 100.0	0.0				
	C136	Output P4 ON delay	0.0 to 100.0	0.0				
	C137	Output P4 OFF delay	0.0 to 100.0	0.0				
	C138	Output P5 ON delay	0.0 to 100.0	0.0				
	C139	Output P5 OFF delay	0.0 to 100.0	0.0				
	C140	Relay output ON delay	0.0 to 100.0	0.0				
	C141	Relay output OFF delay	0.0 to 100.0	0.0				
	C142	Logic output signal 1 selection 1	Same as options for C021 to C026 (excluding LOG1 to LOG6)	00	No	Yes	—	4-99
	C143	Logic output signal 1 selection 2	Same as options for C021 to C026 (excluding LOG1 to LOG6)	00				
	C144	Logic output signal 1 operator selection	00: AND 01: OR 02: XOR	00				
	C145	Logic output signal 2 selection 1	Same as options for C021 to C026 (excluding LOG1 to LOG6)	00				
	C146	Logic output signal 2 selection 2	Same as options for C021 to C026 (excluding LOG1 to LOG6)	00				
	C147	Logic output signal 2 operator selection	00: AND 01: OR 02: XOR	00				
	C148	Logic output signal 3 selection 1	Same as options for C021 to C026 (excluding LOG1 to LOG6)	00				
	C149	Logic output signal 3 selection 2	Same as options for C021 to C026 (excluding LOG1 to LOG6)	00				
	C150	Logic output signal 3 operator selection	00: AND 01: OR 02: XOR	00				
	C151	Logic output signal 4 selection 1	Same as options for C021 to C026 (excluding LOG1 to LOG6)	00				

* 2nd/3rd control is displayed when "SET(08)/SET3(17)" is allocated to one of multi-function inputs from C001 to C008.

Parameter No.		Function name	Monitor or data range	Default setting	Changes during operation		Unit	Page
					Normal	b031 = 10		
Output terminal operation function	C152	Logic output signal 4 selection 2	Same as options for C021 to C026 (excluding LOG1 to LOG6)	00	No	Yes	—	4-99
	C153	Logic output signal 4 operator selection	00: AND 01: OR 02: XOR	00				
	C154	Logic output signal 5 selection 1	Same as options for C021 to C026 (excluding LOG1 to LOG6)	00				
	C155	Logic output signal 5 selection 2	Same as options for C021 to C026 (excluding LOG1 to LOG6)	00				
	C156	Logic output signal 5 operator selection	00: AND 01: OR 02: XOR	00				
	C157	Logic output signal 6 selection 1	Same as options for C021 to C026 (excluding LOG1 to LOG6)	00				
	C158	Logic output signal 6 selection 2	Same as options for C021 to C026 (excluding LOG1 to LOG6)	00				
	C159	Logic output signal 6 operator selection	00: AND 01: OR 02: XOR	00				
Input terminal response	C160	Input terminal response time 1	0. to 200. (× 2 ms)	1	No	Yes	ms	4-105
	C161	Input terminal response time 2	0. to 200. (× 2 ms)	1				
	C162	Input terminal response time 3	0. to 200. (× 2 ms)	1				
	C163	Input terminal response time 4	0. to 200. (× 2 ms)	1				
	C164	Input terminal response time 5	0. to 200. (× 2 ms)	1				
	C165	Input terminal response time 6	0. to 200. (× 2 ms)	1				
	C166	Input terminal response time 7	0. to 200. (× 2 ms)	1				
	C167	Input terminal response time 8	0. to 200. (× 2 ms)	1				
	C168	FW terminal response time	0. to 200. (× 2 ms)	1				
Others	C169	Multi-step speed/ position determination time	0. to 200. (× 10 ms)	0	No	Yes	ms	4-16 4-132

* 2nd/3rd control is displayed when "SET(08)/SET3(17)" is allocated to one of multi-function inputs from C001 to C008.

	Parameter No.	Function name	Monitor or data range	Default setting	Changes during operation		Unit	Page
					Normal	b031 = 10		
Control parameter	H001	Auto-tuning selection	00: Disabled 01: Not rotate 02: Rotate	00	No	No	—	4-109
	H002	Motor parameter selection	00: Standard motor parameter 01: Auto-tuning parameter 02: Auto-tuning parameter (online auto-tuning enabled)	00	No	No	—	4-109 4-111 4-112
	H202	* 2nd motor parameter selection		00				
	H003	Motor capacity selection	0.20 to 160.0	Factory default	No	No	kW	4-19 4-109 4-112 4-116
	H203	* 2nd motor capacity selection		Factory default				
	H004	Motor pole number selection	2/4/6/8/10	4	No	No	Pole	
	H204	* 2nd motor pole number selection		4				
	H005	Speed response	0.001 to 9.999/10.00 to 80.00 (10.000 to 80.000)	1.590	Yes	Yes	—	4-87 4-89
	H205	* 2nd speed response		1.590				

* 2nd/3rd control is displayed when "SET(08)/SET3(17)" is allocated to one of multi-function inputs from C001 to C008.

	Parameter No.	Function name	Monitor or data range	Default setting	Changes during operation		Unit	Page
					Normal	b031 = 10		
Control parameter	H006	Stabilization parameter	0. to 255.	100.	Yes	Yes	—	4-117
	H206	* 2nd stabilization parameter		100.				
	H306	* 3rd stabilization parameter		100.				
	H020	Motor parameter R1	0.001 to 9.999 10.00 to 65.53	Depends on the motor capacity.	No	No	Ω	4-112
	H220	* 2nd motor parameter R1		Depends on the motor capacity.				
	H021	Motor parameter R2	0.001 to 9.999 10.00 to 65.53	Depends on the motor capacity.	No	No	Ω	
	H221	* 2nd motor parameter R2		Depends on the motor capacity.				
	H022	Motor parameter L	0.01 to 99.99 100.0 to 655.3	Depends on the motor capacity.	No	No	mH	
	H222	* 2nd motor parameter L		Depends on the motor capacity.				
	H023	Motor parameter Io	0.01 to 99.99 100.0 to 655.3	Depends on the motor capacity.	No	No	A	4-112
	H223	* 2nd motor parameter Io		Depends on the motor capacity.				
	H024	Motor parameter J	0.001 to 9.999 10.00 to 99.99 100.0 to 999.9 1000. to 9999.	Depends on the motor capacity.	No	No	kgm^2	
	H224	* 2nd motor parameter J		Depends on the motor capacity.				

* 2nd/3rd control is displayed when "SET(08)/SET3(17)" is allocated to one of multi-function inputs from C001 to C008.

Parameter No.		Function name	Monitor or data range	Default setting	Changes during operation		Unit	Page
					Normal	b031 = 10		
Control parameter	H030	Motor parameter R1 (auto-tuning data)	0.001 to 9.999 10.00 to 65.53	Depends on the motor capacity.	No	No	Ω	4-109 4-112
	H230	* 2nd motor parameter R1 (auto-tuning data)		Depends on the motor capacity.				
	H031	Motor parameter R2 (auto-tuning data)	0.001 to 9.999 10.00 to 65.53	Depends on the motor capacity.	No	No	Ω	
	H231	* 2nd motor parameter R2 (auto-tuning data)		Depends on the motor capacity.				
	H032	Motor parameter L (auto-tuning data)	0.01 to 99.99 100.0 to 655.3	Depends on the motor capacity.	No	No	mH	
	H232	* 2nd motor parameter L (auto-tuning data)		Depends on the motor capacity.				
	H033	Motor parameter Io (auto-tuning data)	0.01 to 99.99 100.0 to 655.3	Depends on the motor capacity.	No	No	A	
	H233	* 2nd motor parameter Io (auto-tuning data)		Depends on the motor capacity.				
	H034	Motor parameter J (auto-tuning data)	0.001 to 9.999 10.00 to 99.99 100.0 to 999.9 1000. to 9999.	Depends on the motor capacity.	No	No	kgm^2	
	H234	* 2nd motor parameter J (auto-tuning data)		Depends on the motor capacity.				

* 2nd/3rd control is displayed when "SET(08)/SET3(17)" is allocated to one of multi-function inputs from C001 to C008.

Parameter No.		Function name	Monitor or data range	Default setting	Changes during operation		Unit	Page
					Normal	b031 = 10		
Control parameter	H050	PI proportional gain	0.0 to 999.9 1000.	100.0	Yes	Yes	—	4-87 4-89
	H250	* 2nd PI proportional gain		100.0				
	H051	PI integral gain	0.0 to 999.9 1000.	100.0	Yes	Yes	—	
	H251	*2nd PI integral gain		100.0				
	H052	P proportional gain	0.01 to 10.00	1.00	Yes	Yes	—	
	H252	*2nd P proportional gain		1.00				
	H060	Limit at 0 Hz	0.0 to 100.0	100.0	Yes	Yes	%	4-114
	H260	* 2nd limit at 0 Hz		100.0				
	H061	Boost amount at SLV startup, 0 Hz	0. to 50.	50.	Yes	Yes	%	
	H261	* 2nd boost amount at SLV startup, 0 Hz		50.				
	H070	For PI proportional gain switching	0.0 to 999.9 1000.	100.0	Yes	Yes	—	4-87
	H071	For PI integral gain switching	0.0 to 999.9 1000.	100.0	Yes	Yes	—	
	H072	For P proportional gain switching	0.00 to 10.00	1.00	Yes	Yes	—	
	H073	Gain switching time	0. to 9999.	100.	Yes	Yes	ms	

* 2nd/3rd control is displayed when "SET(08)/SET3(17)" is allocated to one of multi-function inputs from C001 to C008.

Parameter No.		Function name	Monitor or data range	Default setting	Changes during operation		Unit	Page
					Normal	b031 = 10		
Options	P001	Operation selection at option 1 error	00: Trip 01: Continues operation	00	No	Yes	—	4-108
	P002	Operation selection at option 2 error	00: Trip 01: Continues operation	00	No	Yes	—	
	P011	Encoder pulses	128. to 9999. 1000 to 6553 (10000 to 65535)	1024.	No	No	Pulse	4-119 4-128 4-129
	P012	V2 control mode selection	00: ASR (speed control mode) 01: APR (pulse train position control mode) 02: APR2 (absolute position control mode) 03: HAPR (High resolution absolute position control mode)	00	No	No	—	4-119 4-131
	P013	Pulse train mode selection	00: Mode 0 01: Mode 1 02: Mode 2	00	No	No	—	4-122
	P014	Orientation stop position	0. to 4095.	0.	No	Yes	—	4-129
	P015	Orientation speed setting	Starting frequency to Max. frequency (upper limit: 120.0)	5.00	No	Yes	Hz	
	P016	Orientation direction setting	00: Forward side 01: Reverse side	00	No	No	—	

* 2nd/3rd control is displayed when "SET(08)/SET3(17)" is allocated to one of multi-function inputs from C001 to C008.

Parameter No.		Function name	Monitor or data range	Default setting	Changes during operation		Unit	Page
					Normal	b031 = 10		
Options	P017	Position ready range setting	0. to 9999. 1000(10000)	5.	No	Yes	Pulse	4-122 4-129
	P018	Position ready delay time setting	0.00 to 9.99	0.00	No	Yes	s	4-122 4-129
	P019	Electronic gear setting position selection	00: Position feedback side (FB) 01: Position command side (REF)	00	No	Yes	—	4-123 4-124
	P020	Electronic gear ratio numerator	0. to 9999.	1.	Yes	Yes	—	
	P021	Electronic gear ratio denominator	0. to 9999.	1.	Yes	Yes	—	
	P022	Position control feedforward gain	0.00 to 99.99 100.0 to 655.3	0.00	Yes	Yes	—	
	P023	Position loop gain	0.00 to 99.99 100.0	0.50	Yes	Yes	rad/s	4-119 4-123 4-124 4-129 4-131
	P024	Position bias amount	-204(-2048.)/-999. to 2048.	0.	Yes	Yes	—	4-123
	P025	Secondary resistance compensation enable/ disable selection	00: Disabled 01: Enabled	00	No	Yes	—	4-111
	P026	Overspeed error detection level	0.0 to 150.0	135.0	No	Yes	%	5-6
	P027	Speed deviation error detection level	0.00 to 99.99 100.0 to 120.0	7.50	No	Yes	Hz	4-119
	P028	Motor gear ratio numerator	1. to 9999.	1.	No	Yes	—	4-128
	P029	Motor gear ratio denominator	1. to 9999.	1.	No	Yes	—	
	P031	Acceleration/ deceleration time input type	00: Digital Operator 01: Option 1 02: Option 2	00	No	No	—	4-9
	P032	Orientation stop position input type	00: Digital Operator 01: Option 1 02: Option 2	00	No	Yes	—	—
	P033	Torque reference input selection	00: Terminal FV 01: Terminal FI 02: Terminal FE 03: Digital Operator	00	No	No	—	4-121
	P034	Torque reference setting	0. to 200. (0.4 to 55 kW) 0. to 180. (75 to 132 kW)	0.	Yes	Yes	%	
	P035	Polarity selection at torque reference via FE	00: Signed 01: Depends on the RUN direction	00	No	No	—	

* 2nd/3rd control is displayed when "SET(08)/SET3(17)" is allocated to one of multi-function inputs from C001 to C008.

Parameter No.		Function name	Monitor or data range	Default setting	Changes during operation		Unit	Page
					Normal	b031 = 10		
Options	P036	Torque bias mode	00: None 01: Digital Operator 02: Terminal FE	00	No	No	—	4-121 4-122
	P037	Torque bias value	-200. to +200. (0.4 to 55 kW) -180. to +180. (75 to 132 kW)	0.	Yes	Yes	%	
	P038	Torque bias polarity selection	00: Signed 01: Depends on the RUN direction	00	No	No	—	
	P039	Speed limit value in torque control (forward)	0.00 to Maximum frequency	0.00	Yes	Yes	Hz	4-121
	P040	Speed limit value in torque control (reverse)	0.00 to Maximum frequency	0.00	Yes	Yes	Hz	
	P044	Not used	Use "1.00". *Do not change.	1.00	No	No	s	—
	P045	Operation setting at communications error	00: Trip 01: Trip after deceleration stop 02: Ignore 03: Free run 04: Deceleration stop	01	No	No	—	—
	P046	Output assembly instance No. setting	20 21 100	21	No	No	—	—
	P047	Input assembly instance No. setting	70 71 101	71	No	No	—	—
	P048	Operation setting at idle mode detection	00: Trip 01: Trip after deceleration stop 02: Ignore 03: Free run 04: Deceleration stop	01	No	No	—	—
	P049	Polarity setting for rotation speed	0/2/4/6/8/10/12/14/16/18/20/22/24/26/28/30/32/34/36/38	0	No	No	—	—
	P055	Pulse train frequency scale	1.0 to 50.0	25.0	No	Yes	kHz	4-138
	P056	Pulse train frequency filter time constant	0.01 to 2.00	0.10	No	Yes	s	
	P057	Pulse train frequency bias amount	-100. to +100.	0.	No	Yes	%	
	P058	Pulse train frequency limit	0. to 100.	100.	No	Yes	%	

* 2nd/3rd control is displayed when "SET(08)/SET3(17)" is allocated to one of multi-function inputs from C001 to C008.

Parameter No.		Function name	Monitor or data range	Default setting	Changes during operation		Unit	Page
					Normal	b031 = 10		
Absolute position control	P060	Multi-step position command 0	Position range specification (reverse side) to Position range specification (forward side)(Displays MSB 4 digits including "-")	0	Yes	Yes	—	4-131
	P061	Multi-step position command 1	Position range specification (reverse side) to Position range specification (forward side)(Displays MSB 4 digits including "-")	0				
	P062	Multi-step position command 2	Position range specification (reverse side) to Position range specification (forward side)(Displays MSB 4 digits including "-")	0				
	P063	Multi-step position command 3	Position range specification (reverse side) to Position range specification (forward side)(Displays MSB 4 digits including "-")	0				
	P064	Multi-step position command 4	Position range specification (reverse side) to Position range specification (forward side)(Displays MSB 4 digits including "-")	0				
	P065	Multi-step position command 5	Position range specification (reverse side) to Position range specification (forward side)(Displays MSB 4 digits including "-")	0				
	P066	Multi-step position command 6	Position range specification (reverse side) to Position range specification (forward side)(Displays MSB 4 digits including "-")	0				
	P067	Multi-step position command 7	Position range specification (reverse side) to Position range specification (forward side)(Displays MSB 4 digits including "-")	0				
	P068	Zero return mode	00: Low 01: Hi1 02: Hi2	00	Yes	Yes	—	
	P069	Zero return direction selection	00: Forward side 01: Reverse side	00	Yes	Yes	—	

* 2nd/3rd control is displayed when "SET(08)/SET3(17)" is allocated to one of multi-function inputs from C001 to C008.

Parameter No.		Function name	Monitor or data range	Default setting	Changes during operation		Unit	Page
					Normal	b031 = 10		
Absolute position control	P070	Low-speed zero return frequency	0.00 to 10.00	0.00	Yes	Yes	Hz	4-131
	P071	High-speed zero return frequency	0.00 to 99.99 100.0 to Maximum frequency	0.00	Yes	Yes	Hz	
	P072	Position range specification (forward)	0 to 268435455 (at P012 = 02) 0 to 1073741823 (at P012 = 03) (Displays MSB 4 digits)	268435455	Yes	Yes	—	
	P073	Position range specification (reverse)	-268435455 to 0 (at P012 = 02) -1073741823 to 0 (at P012 = 03) (Displays MSB 4 digits including "-")	-268435455	Yes	Yes	—	4-132
	P074	Teaching selection	00: Multi-step position command 0 (P060) 01: Multi-step position command 1 (P061) 02: Multi-step position command 2 (P062) 03: Multi-step position command 3 (P063) 04: Multi-step position command 4 (P064) 05: Multi-step position command 5 (P065) 06: Multi-step position command 6 (P066) 07: Multi-step position command 7 (P067)	00	Yes	Yes	—	
P100 to P131		Not used	Do not use.	0.	—	—	—	—
User parameter	U001	User 1 selection	no/d001 to P074	no	Yes	Yes	—	4-53
	U002	User 2 selection	no/d001 to P074	no				
	U003	User 3 selection	no/d001 to P074	no				
	U004	User 4 selection	no/d001 to P074	no				
	U005	User 5 selection	no/d001 to P074	no				
	U006	User 6 selection	no/d001 to P074	no				
	U007	User 7 selection	no/d001 to P074	no				
	U008	User 8 selection	no/d001 to P074	no				
	U009	User 9 selection	no/d001 to P074	no				
	U010	User 10 selection	no/d001 to P074	no				
	U011	User 11 selection	no/d001 to P074	no				
	U012	User 12 selection	no/d001 to P074	no				

* 2nd/3rd control is displayed when "SET(08)/SET3(17)" is allocated to one of multi-function inputs from C001 to C008.

Appendix-2 Product Life Curve

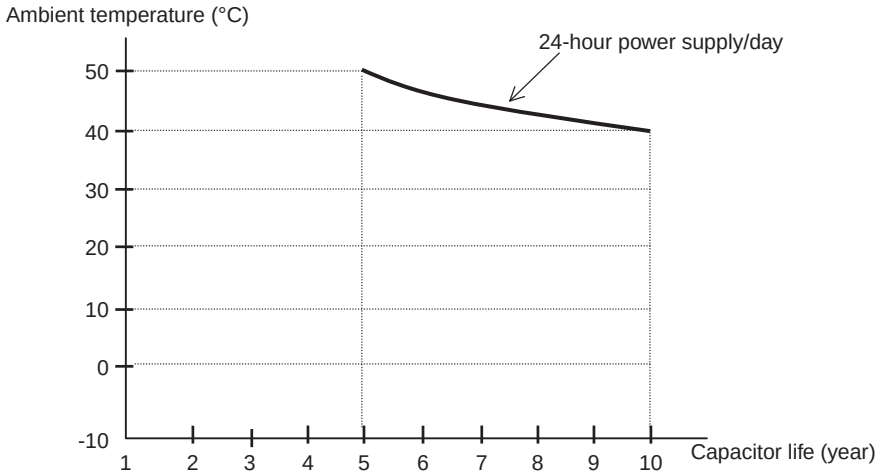

Note 1: Ambient temperature refers to the temperature measured at the location approximately 5 cm from the bottom center of the Inverter. (atmospheric temperature)
It refers to the temperature inside if the Inverter is stored in an enclosure.

Note 2: The smoothing capacitor, which will deteriorate because of the chemical reaction caused by the temperatures of the parts, should normally be replaced once every 10 years (which is the expected design life, and not guaranteed).
However, if the ambient temperature is high, or the Inverter is used with a current exceeding the rated current, for example, under overload conditions, its life will be significantly shortened.

Appendix-3 Life Alarm Output

- When the product life becomes close to the end for the parts including the on-board smoothing capacitor or cooling fan, but excluding the main circuit smoothing capacitor, an alarm can be output through the self-diagnostic function. Use it as a reference of the parts replacement period.
  For details, refer to "Life Assessment Monitor [d022]" (page 4-5), "Multi-function Pulse Counter (PCNT, PCC)" (page 4-91), or "Multi-function Output Terminal Contact Selection" (page 4-93).
  This alarm is output through the self-diagnosis based on the expected design life (not a guaranteed value). Therefore, it has a margin of error depending on your environment or operation conditions.

Index

Index

Numerics

0-Hz sensorless vector control 4-114
2-step acceleration/deceleration 4-37
3-wire input function 4-86

A

acceleration stop 4-30
acceleration time 2 4-37
acceleration/deceleration pattern 4-38
acceleration/deceleration time 4-8
ADD 4-41
AHD 4-91
AL 4-92
alarm code output 4-98
allowable momentary power interruption time 4-42
AM 2-8, 4-107
AMI 2-8, 4-107
analog command hold function 4-91
automatic energy-saving operation function 4-36
automatic optimum acceleration/deceleration 4-36
automatic torque boost 4-21

B

base frequency 4-11
basic display 4-56
BER 4-73
binary operation 4-17
bit operation 4-18
BOK 4-73
brake control 4-73
BRK 4-73

C

capacitor life warning 4-100
carrier frequency 4-65
CAS 4-87
commercial switching 4-83
communication function 4-139
constant torque characteristics (VC) 4-22
control circuit terminal 2-7
control gain switching 4-87
control method 4-21
cooling fan control 4-72
cooling fan speed drop signal 4-101
current position monitor 4-6

D

data comparison display 4-53, 4-55
DC injection braking 4-24
DC voltage monitor 4-7
deceleration time 2 4-37
derating 4-65
digital operator 2-24, 3-3
display selection 3-10, 4-53
DWN 4-88

E

electronic gear 4-124
electronic thermal monitor 4-7
EMC 2-15, 2-16, 2-17
emergency shutoff 2-9, 2-10
end frequency 4-14
end ratio 4-14
error code 5-1
excess speed 5-6
EXT 4-82
extended function mode 3-15
external analog input 4-12
external DC injection braking 4-25
external thermistor 4-73
external trip (EXT) 4-82

F

F/R 4-86
fatal fault signal 4-104
fault frequency monitor 4-6
fault monitor 4-6
FBV 4-34
FC 2-7, 2-22
FE 2-7, 2-22
feedback 4-32
feedback option 4-118
FI 2-7, 2-22
fin overheat warning 4-102
fin temperature monitor 4-5
FOC 4-116
forced operator 4-89
forced terminal 4-90
forward run signal 4-104
FR 4-102
free-run stop 4-68
free-run stop selection and stop selection 4-68
frequency addition function 4-41
frequency arrival signal 4-95
frequency conversion coefficient 4-2
frequency jump 4-30
frequency limit 4-28
    lower limit 4-28
    upper limit 4-28
frequency matching 4-68

frequency pull-in restart 4-43, 4-45
frequency reference selection 4-10
FRS 4-69
FS 2-7
F-TM 4-90
function mode 4-8
FV 2-7, 2-22
FW 2-9
FWR 4-104

H

high-torque multi-operation 4-117

I

initial screen 4-56
initialization 4-66
input power monitor 4-4
integrated power monitor 4-4
internal DC injection braking 4-26, 4-27
IP 4-44, 4-45

J

JG 4-18
jogging operation 4-18

K

KHC 4-4

L

LAC 4-9, 4-40
LAD 4-9, 4-78
life assessment monitor 4-5, 4-100
light load detection signal 4-103
LOC 4-103
LOG1 to LOG6 4-99

M

main circuit terminal 2-7, 2-15
manual torque boost 4-20
maximum frequency 4-12
MJA 4-104
momentary power interruption non-stop 4-60
momentary power interruption/undervoltage trip during stop selection 4-42, 4-44
MP 2-8, 4-106
multi-function input monitor 4-2
multi-function input terminal selection 4-77
multi-function output monitor 4-2
multi-function output terminal 4-92

N

NDc 4-101
no 4-77

O

OD 4-34
offline auto-tuning 4-108
OHF 4-102
OL, OL2 4-50
OLR 4-49
online auto-tuning 4-111
ONT 4-52
OPE 4-89
operation frequency function 4-41
operation method 3-3
operation ready signal 4-103
operation selection during option error 4-108
option board protection function 5-6
orientation function 4-129
OTQ 4-97
output current monitor 4-1
output frequency monitor 4-1, 4-2
output frequency setting/monitor 4-8
output signal delay/hold 4-105
output signal logic operation 4-99
output torque monitor 4-3
output voltage gain 4-24
output voltage monitor 4-4
overcurrent suppression 4-51
overload limit 4-49
overload warning 4-49
overtorque 4-97
overvoltage protection function during deceleration 4-76

P

P/PI switching 4-89
P24 2-8
phase loss protection 4-46
PID 4-31
PID feedback value monitor 4-1
PIDC 4-35
power ON time 4-5
power recovery restart prevention 4-82
PPI 4-89
preliminary excitation 4-116
pulse train frequency input 4-138

R

real frequency monitor 4-3

Index

reduced voltage startup 4-53
relay output terminals 4-94
reset 3-9, 4-85
retry selection 4-42
reverse rotation prevention 4-59
reverse run signal 4-104
RNT 4-52
rotation direction limit selection 4-52
rotation direction selection 4-10
RS 2-10
RUN 4-95
RUN command selection 4-11
RUN direction monitor 4-1
RUN direction selection 4-10
RV 2-12, 4-77
RVR 4-104

S

SC 2-8, 2-22
secondary resistance compensation 4-111
sensor vector control 4-120
sensorless vector control 4-113
servo ON 4-137
SF1 to SF7 4-18
signal during RUN 4-95
sink logic 2-23
slide switch 2-11
soft lock 4-51
SON 4-137
source logic 2-23
special reduced torque characteristics 4-22
STA 4-86
stabilization parameter 4-117
start frequency 4-14
start ratio 4-14
start selection 4-14
starting contact signal 4-102
starting frequency 4-65
stop key selection 4-68
stop selection 4-68
STP 4-86
synchronous operation 4-126

T

test run 3-5
thermistor 4-73
THM 4-49
TL 4-58
torque bias monitor 4-3
torque boost 4-19
torque LADSTOP function 4-59
torque limit 4-57
torque reference monitor 4-3
total RUN time 4-4
trip monitor display 4-6, 5-9
trip retry 4-42
TRQ 4-92
TRQ1, TRQ2 4-58

U

UDC 4-88
UP 4-88
UP/DOWN function 4-88
user parameter 4-57
user selection 4-53
USP 4-82
UV 4-45, 4-92

V

V2 4-119

W

WAF 4-101
wiring control circuit terminals 2-22
wiring the main circuit terminals 2-12

Z

ZS 4-98

OMRON Corporation
Industrial Automation Company
Control Devices Division H.Q.
Motion Control Division
Shiokoji Horikawa, Shimogyo-ku,
Kyoto, 600-8530 Japan
Tel: (81) 75-344-7173/Fax: (81) 75-344-7149

2-2-1 Nishikusatsu, Kusatsu-shi,
Shiga, 525-0035 Japan
Tel: (81) 77-565-5223/Fax: (81) 77-565-5568

Regional Headquarters
OMRON EUROPE B.V.
Wegalaan 67-69-2132 JD Hoofddorp
The Netherlands
Tel: (31)2356-81-300/Fax: (31)2356-81-388

OMRON ELECTRONICS LLC
One Commerce Drive Schaumburg,
IL 60173-5302 U.S.A.
Tel: (1) 847-843-7900/Fax: (1) 847-843-7787

OMRON ASIA PACIFIC PTE. LTD.
No. 438A Alexandra Road # 05-05/08 (Lobby 2),
Alexandra Technopark, Singapore 119967
Tel: (65) 6835-3011/Fax: (65) 6835-2711

OMRON (CHINA) CO., LTD.
Room 2211, Bank of China Tower,
200 Yin Cheng Zhong Road,
PuDong New Area, Shanghai, 200120, China
Tel: (86) 21-5037-2222/Fax: (86) 21-5037-2200

OMRON Industrial Automation Global: **www.ia.omron.com**

Authorized Distributor:

© OMRON Corporation 2007 All Rights Reserved.
In the interest of product improvement,
specifications are subject to change without notice.

Cat. No. I560-E1-03